Datasheet

32

Renesas RA4M1 Group

Datasheet

32-bit MCU

Renesas Advanced (RA) Family

Renesas RA4 Series

All information contained in these materials, including products and product specifications, represents information on the product at the time of publication and is subject to change by Renesas Electronics Corp. without notice. Please review the latest information published by Renesas Electronics Corp. through various means, including the Renesas Electronics Corp. website (http://www.renesas.com).

Renesas Electronics
www.renesas.com

Rev.1.00 Oct 2019

Datasheet

32

Renesas RA4M1 Group

Datasheet

瑞萨电子高级(RA)系列32位MCU

Renesas RA4 Series

RA生态工作室

这些材料中包含的所有信息（包括产品和产品规格）均代表发布时的产品信息，瑞萨电子公司可能会随时更改，恕不另行通知。请查看瑞萨电子公司通过各种方式发布的最新信息，包括瑞萨电子公司网站(http:www.renesas.com)。

Renesas Electronics
www.renesas.com

Rev.1.00 Oct 2019

High efficiency 48-MHz Arm® Cortex®-M4 core, 256-KB code flash memory, 32-KB SRAM, Segment LCD Controller, Capacitive Touch Sensing Unit, USB 2.0 Full-Speed Module, 14-bit A/D Converter, 12-bit D/A Converter, security and safety features

Features

■ Arm Cortex-M4 Core with Floating Point Unit (FPU)
- Armv7E-M architecture with DSP instruction set
- Maximum operating frequency: 48 MHz
- Support for 4-GB address space
- Arm Memory Protection Unit (Arm MPU) with 8 regions
- Debug and Trace: ITM, DWT, FPB, TPIU, ETB
- CoreSight™ Debug Port: JTAG-DP and SW-DP

■ Memory
- 256-KB code flash memory
- 8-KB data flash memory (100,000 program/erase (P/E) cycles)
- 32-KB SRAM
- Flash Cache (FCACHE)
- Memory Protection Unit (MPU)
- 128-bit unique ID

■ Connectivity
- USB 2.0 Full-Speed Module (USBFS)
  - On-chip transceiver with voltage regulator
  - Compliant with USB Battery Charging Specification 1.2
- Serial Communications Interface (SCI) × 4
  - UART
  - Simple IIC
  - Simple SPI
- Serial Peripheral Interface (SPI) × 2
- I^2C bus interface (IIC) × 2
- Controller Area Network (CAN) module
- Serial Sound Interface Enhanced (SSIE)

■ Analog
- 14-bit A/D Converter (ADC14)
- 12-bit D/A Converter (DAC12)
- 8-bit D/A Converter (DAC8) ×2 (for ACMPLP)
- Low-Power Analog Comparator (ACMPLP) × 2
- Operational Amplifier (OPAMP) × 4
- Temperature Sensor (TSN)

■ Timers
- General PWM Timer 32-Bit (GPT32) × 2
- General PWM Timer 16-Bit (GPT16) × 6
- Asynchronous General-Purpose Timer (AGT) × 2
- Watchdog Timer (WDT)

■ Safety
- Error Correction Code (ECC) in SRAM
- SRAM parity error check
- Flash area protection
- ADC self-diagnosis function
- Clock Frequency Accuracy Measurement Circuit (CAC)
- Cyclic Redundancy Check (CRC) calculator
- Data Operation Circuit (DOC)
- Port Output Enable for GPT (POEG)
- Independent Watchdog Timer (IWDT)
- GPIO readback level detection
- Register write protection
- Main oscillator stop detection
- Illegal memory access

■ System and Power Management
- Low power modes
- Realtime Clock (RTC) with calendar and Battery Backup support
- Event Link Controller (ELC)
- DMA Controller (DMAC) × 4
- Data Transfer Controller (DTC)
- Key Interrupt Function (KINT)
- Power-on reset
- Low Voltage Detection (LVD) with voltage settings

■ Security and Encryption
- AES128/256
- GHASH
- True Random Number Generator (TRNG)

■ Human Machine Interface (HMI)
- Segment LCD Controller (SLCDC)
  - Up to 38 segments × 4 commons
  - Up to 34 segments × 8 commons
- Capacitive Touch Sensing Unit (CTSU)

■ Multiple Clock Sources
- Main clock oscillator (MOSC)
  (1 to 20 MHz when VCC = 2.4 to 5.5 V)
  (1 to 8 MHz when VCC = 1.8 to 2.4 V)
  (1 to 4 MHz when VCC = 1.6 to 1.8 V)
- Sub-clock oscillator (SOSC) (32.768 kHz)
- High-speed on-chip oscillator (HOCO)
  (24, 32, 48, 64 MHz when VCC = 2.4 to 5.5 V)
  (24, 32, 48 MHz when VCC = 1.8 to 5.5 V)
  (24, 32 MHz when VCC = 1.6 to 5.5 V)
- Middle-speed on-chip oscillator (MOCO) (8 MHz)
- Low-speed on-chip oscillator (LOCO) (32.768 kHz)
- IWDT-dedicated on-chip oscillator (15 kHz)
- Clock trim function for HOCO/MOCO/LOCO
- Clock out support

■ General Purpose I/O Ports
- Up to 84 input/output pins
  - Up to 3 CMOS input
  - Up to 81 CMOS input/output
    - Up to 9 input/output 5-V tolerant
    - Up to 2 high current (20 mA)

■ Operating Voltage
- VCC: 1.6 to 5.5 V

■ Operating Temperature and Packages
- Ta = -40°C to +85°C
  - 100-pin LGA (7 mm × 7 mm, 0.65 mm pitch)
- Ta = -40°C to +105°C
  - 100-pin LQFP (14 mm × 14 mm, 0.5 mm pitch)
  - 64-pin LQFP (10 mm × 10 mm, 0.5 mm pitch)
  - 64-pin QFN (8 mm × 8 mm, 0.4 mm pitch)
  - 48-pin LQFP (7 mm × 7 mm, 0.5 mm pitch)
  - 48-pin QFN (7 mm × 7 mm, 0.5 mm pitch)
  - 40-pin QFN (6 mm × 6 mm, 0.5 mm pitch)

高效48-MHzArm®Cortex®-M4内核、256-KB代码闪存、32-KBSRAM、段式LCD控制器、电容式触摸感应单元、USB2.0全速模块、14位AD转换器、12位DA转换器，安全和安全功能

Features

■带浮点单元(FPU)的ArmCortex-M4内核带DSP指令集的Armv7E-M架构最大工作频率：48MHz支持4GB地址空间具有8个区域的Arm内存保护单元(ArmMPU)调试和跟踪：ITM、DWT、FPB、TPIU、ETB　CoreSight　调试端口：JTAG-DP和SW-DP

■ **Memory**

256KB代码闪存　8KB数据闪存（100 000个程序擦除(PE)周期）　32KBSRAM　闪存高速缓存(FCACHE)　内存保护单元(MPU)　128位唯一ID

■ **Connectivity**

USB2.0全速模块(USBFS)

带稳压器的片上收发器符合USB电池充电规范1.2　串行通信接口(SCI)×4UART简单IIC简单SPI　串行外设接口(SPI)×2　I2C总线接口(IIC)×2　控制器局域网(CAN)模块　增强型串行声音接口(SSIE)

■ **Analog**

14位模数转换器(ADC14)　12位数模转换器(DAC12)　8位数模转换器(DAC8)×2（用于ACMPLP）低功耗模拟比较器(ACMPLP)×2　运算放大器(OPAMP)×4　温度传感器(TSN)

■ **Timers**

通用PWM定时器32位(GPT32)×2　通用PWM定时器16位(GPT16)×6　异步通用定时器(AGT)×2　看门狗定时器(WDT)

■ **Safety**

SRAM中的纠错码(ECC)　SRAM奇偶校验错误检查　闪存区域保护　ADC自诊断功能　时钟频率精度测量电路(CAC)循环冗余校验(CRC)计算器　数据操作电路(DOC)　端口GPT(POEG)的输出使能　独立看门狗定时器(IWDT)　GPIO回读电平检测　寄存器写保护　主振荡器停止检测　非法内存访问

■系统和电源管理　低功耗模式　支持日历和备用电池的实时时钟(RTC)　事件链接控制器(ELC)　DMA控制器(DMAC)×4　数据传输控制器(DTC)　按键中断功能(KINT)　上电复位　具有电压设置的低电压检测(LVD)

■安全和加密　AES128256　GHASH　真随机数生成器(TRNG)

■人机界面(HMI)　段式LCD控制器(SLCDC)最多38段×4个公共端最多34段×8个公共端　电容式触摸传感单元(CTSU)

■**多个时钟源**

主时钟振荡器(MOSC)

（VCC=2.4至5.5V时为1至20MHz）（VCC=1.8至2.4V时为1至8MHz）（VCC=1.6至1.8V时为1至4MHz）副时钟振荡器(SOSC)(32.768kHz)　高速片上振荡器(HOCO)

（当VCC=2.4到5.5V时为24、32、48、64MHz）（当VCC=1.8到5.5V时为24、32、48MHz）（当VCC=1.6到5.5V时为24、32MHz）　中速开启-片上振荡器(MOCO)(8MHz)　低速片上振荡器(LOCO)(32.768kHz)　IWDT专用片上振荡器(15kHz)　HOCOMOCOLOCO的时钟微调功能　时钟输出支持

■通用IO端口　最多84个输入输出引脚最多3个CMOS输入最多81个CMOS输入输出最多9个输入输出5-V耐受最多2个高电流(20mA)

■工作电压　VCC：1.6至5.5V

■**工作温度和封装　Ta=-40°C至+85°C**

100引脚LGA（7mm×7mm，0.65mm间距）　Ta=-40°C至+105°C
- 100-pin LQFP (14 mm × 14 mm, 0.5 mm pitch)
- 64-pin LQFP (10 mm × 10 mm, 0.5 mm pitch)
- 64-pin QFN (8 mm × 8 mm, 0.4 mm pitch)
- 48-pin LQFP (7 mm × 7 mm, 0.5 mm pitch)
- 48-pin QFN (7 mm × 7 mm, 0.5 mm pitch)
- 40-pin QFN (6 mm × 6 mm, 0.5 mm pitch)

RA生态工作室

1. Overview

The MCU integrates multiple series of software- and pin-compatible Arm®-based 32-bit cores that share a common set of Renesas peripherals to facilitate design scalability and efficient platform-based product development.

The MCU provides an optimal combination of low-power, high-performance Arm Cortex®-M4 core running up to 48 MHz with the following features:

- 256-KB code flash memory
- 32-KB SRAM
- Segment LCD Controller (SLCDC)
- Capacitive Touch Sensing Unit (CTSU)
- USB 2.0 Full-Speed Module (USBFS)
- 14-bit A/D Converter (ADC14)
- 12-bit D/A Converter (DAC12)
- Security features.

1.1 Function Outline

Table 1.1 Arm core

Feature	Functional description
Arm Cortex-M4 core	• Maximum operating frequency: up to 48 MHz • Arm Cortex-M4 core - Revision: r0p1-01rel0 - Armv7E-M architecture profile - Single precision floating-point unit compliant with the ANSI/IEEE Std 754-2008. • Arm Memory Protection Unit (Arm MPU) - Armv7 Protected Memory System Architecture - 8 protected regions. • SysTick timer - Driven by SYSTICCLK (LOCO) or ICLK.

Table 1.2 Memory

Feature	Functional description
Code flash memory	Maximum 256-KB code flash memory. See section 44, Flash Memory in User's Manual.
Data flash memory	8-KB data flash memory. See section 44, Flash Memory in User's Manual.
Option-setting memory	The option-setting memory determines the state of the MCU after a reset. See section 6, Option-Setting Memory in User's Manual.
SRAM	On-chip high-speed SRAM with either parity bit or Error Correction Code (ECC). An area in SRAM0 provides error correction capability using ECC. See section 43, SRAM in User's Manual.

1. Overview

MCU集成了多个系列软件和基于Arm®引脚兼容的32位内核，这些内核共享一组通用的瑞萨外设，以促进设计可扩展性和基于平台的高效产品开发。

MCU提供了运行频率高达48MHz的低功耗、高性能ArmCortex®-M4内核与以下特性的最佳组合：

- 256-KB代码闪存
- 32-KB SRAM
- 段式LCD控制器(SLCDC)
- 电容式触控感应单元(CTSU)
- USB2.0全速模块(USBFS)
- 14-bit A/D Converter (ADC14)
- 12-bit D/A Converter (DAC12)
- 安全功能。

1.1 功能概要

Table 1.1 臂芯

Feature	功能说明
ArmCortex-M4内核	最大工作频率：高达48MHz ArmCortex-M4内核版本：r0p1-01rel0Armv7E-M架构配置文件符合ANSIIEEEStd754-2008的单精度浮点单元。 Arm内存保护单元(ArmMPU) Armv7受保护内存系统架构8个受保护区域。 SysTick计时器 由SYSTICCLK(LOCO)或ICLK驱动。

Table 1.2 Memory

Feature	功能说明
代码闪存	最大256KB代码闪存。请参阅用户手册中的第44节，闪存。
数据闪存	8KB数据闪存。请参阅用户手册中的第44节，闪存。
Option-setting memory	选项设置存储器确定复位后MCU的状态。见第6节，用户手册中的选项设置内存。
SRAM	具有奇偶校验位或纠错码(ECC)的片上高速SRAM。一个地区在SRAM0使用ECC提供纠错能力。参见用户手册中的第43节SRAM Manual.

RA生态工作室

Table 1.3 System (1 of 2)

Feature	Functional description
Operating modes	Two operating modes: • Single-chip mode • SCI/USB boot mode. See section 3, Operating Modes in User's Manual.
Resets	14 resets: • RES pin reset • Power-on reset • VBATT-selected voltage power-on reset • Independent watchdog timer reset • Watchdog timer reset • Voltage monitor 0 reset • Voltage monitor 1 reset • Voltage monitor 2 reset • SRAM parity error reset • SRAM ECC error reset • Bus master MPU error reset • Bus slave MPU error reset • CPU stack pointer error reset • Software reset. See section 5, Resets in User's Manual.
Low Voltage Detection (LVD)	Low Voltage Detection (LVD) function monitors the voltage level input to the VCC pin, and the detection level can be selected using a software program. See section 7, Low Voltage Detection (LVD) in User's Manual.
Clocks	• Main clock oscillator (MOSC) • Sub-clock oscillator (SOSC) • High-speed on-chip oscillator (HOCO) • Middle-speed on-chip oscillator (MOCO) • Low-speed on-chip oscillator (LOCO) • PLL frequency synthesizer • IWDT-dedicated on-chip oscillator • Clock out support. See section 8, Clock Generation Circuit in User's Manual.
Clock Frequency Accuracy Measurement Circuit (CAC)	The Clock Frequency Accuracy Measurement Circuit (CAC) counts pulses of the clock to be measured (measurement target clock) within the time generated by the clock to be used as a measurement reference (measurement reference clock), and determines the accuracy depending on whether the number of pulses is within the allowable range. When measurement is complete or the number of pulses within the time generated by the measurement reference clock is not within the allowable range, an interrupt request is generated. See section 9, Clock Frequency Accuracy Measurement Circuit (CAC) in User's Manual.
Interrupt Controller Unit (ICU)	The Interrupt Controller Unit (ICU) controls which event signals are linked to the NVIC/DTC module and DMAC module. The ICU also controls NMI interrupts. See section 13, Interrupt Controller Unit (ICU) in User's Manual.
Key Interrupt Function (KINT)	A key interrupt can be generated by setting the Key Return Mode Register (KRM) and inputting a rising or falling edge to the key interrupt input pins. See section 20, Key Interrupt Function (KINT) in User's Manual.
Low power modes	Power consumption can be reduced in multiple ways, such as by setting clock dividers, stopping modules, selecting power control mode in normal operation, and transitioning to low power modes. See section 10, Low Power Modes in User's Manual.
Battery backup function	A battery backup function is provided for partial powering by a battery. The battery powered area includes RTC, SOSC, LOCO, wakeup control, backup memory, VBATT_R low voltage detection, and switches between VCC and VBATT. During normal operation, the battery powered area is powered by the main power supply, which is the VCC pin. When a VCC voltage drop is detected, the power source is switched to the dedicated battery backup power pin, the VBATT pin. When the voltage rises again, the power source is switched from the VBATT pin to the VCC pin. See section 11, Battery Backup Function in User's Manual.
Register write protection	The register write protection function protects important registers from being overwritten because of software errors. See section 12, Register Write Protection in User's Manual.

Table 1.3 系统(1of2)

Feature	功能说明
操作模式	两种工作模式： 单芯片模式 SCIUSB启动模式。请参阅用户手册中的第3节操作模式。
Resets	14次复位： RES引脚复位 上电复位 VBATT选择的电压上电复位 独立看门狗定时器复位 看门狗定时器复位 电压监控器0复位 电压监控器1复位 电压监控器2复位 SRAM奇偶校验错误复位 SRAMECC错误复位 总线主控MPU错误复位 总线从属MPU错误复位 CPU堆栈指针错误复位 软件复位。请参阅用户手册中的第5节，重置。
低电压检测(LVD)	低电压检测(LVD)功能监控输入到VCC引脚的电压电平，并且可以使用软件程序选择检测电平。请参阅用户手册中的第7节，低电压检测(LVD)。
Clocks	主时钟振荡器(MOSC) 子时钟振荡器(SOSC) 高速片上振荡器(HOCO) 中速片上振荡器(MOCO) 低速片上振荡器(LOCO) PLL频率合成器 IWDT专用片上振荡器 时钟输出支持。请参阅用户手册中的第8节，时钟生成电路。
时钟频率精度测量电路(CAC)	时钟频率精度测量电路(CAC)在用作测量基准的时钟（测量基准时钟）生成的时间内对要测量的时钟（测量目标时钟）的脉冲进行计数，并根据是否脉冲数在允许范围内。当测量完成或测量参考时钟在时间内产生的脉冲数不在允许范围内时，将产生中断请求。请参阅用户手册中的第9节，时钟频率精度测量电路(CAC)。
中断控制器单元(ICU)	中断控制器单元(ICU)控制哪些事件信号链接到NVICDTC模块和DMAC模块。ICU还控制NMI中断。请参阅用户手册中的第13节，中断控制器单元(ICU)。
按键中断功能(KINT)	通过设置按键返回模式寄存器(KRM)并向按键中断输入引脚输入上升沿或下降沿，可以生成按键中断。请参阅用户手册中的第20节，按键中断功能(KINT)。
低功耗模式	可以通过多种方式降低功耗，例如通过设置时钟分频器、停止模块、在正常操作中选择电源控制模式以及转换到低功耗模式。请参阅用户手册中的第10节，低功耗模式。
电池备份功能	提供电池备份功能，由电池部分供电。电池供电区域包括RTC、SOSC、LOCO、唤醒控制、备份存储器、VBATT_R低电压检测以及VCC和VBATT之间的切换。在正常工作期间，电池供电区域由主电源供电，即VCC引脚。当检测到VCC电压下降时，电源切换到专用电池备用电源引脚VBATT引脚。当电压再次上升时，电源从VBATT引脚切换到VCC引脚。请参阅用户手册中的第11节"电池备份功能"。
寄存器写保护	寄存器写保护功能可保护重要寄存器不因软件错误而被覆盖。请参见用户手册中的第12节，寄存器写保护。

RA生态工作室

Table 1.3 System (2 of 2)

Feature	Functional description
Memory Protection Unit (MPU)	Four Memory Protection Units (MPUs) and a CPU stack pointer monitor function are provided for memory protection. See section 15, Memory Protection Unit (MPU) in User's Manual.
Watchdog Timer (WDT)	The Watchdog Timer (WDT) is a 14-bit down-counter. It can be used to reset the MCU when the counter underflows because the system has run out of control and is unable to refresh the WDT. In addition, a non-maskable interrupt or interrupt can be generated by an underflow. A refresh-permitted period can be set to refresh the counter and used as the condition to detect when the system runs out of control. See section 25, Watchdog Timer (WDT) in User's Manual.
Independent Watchdog Timer (IWDT)	The Independent Watchdog Timer (IWDT) consists of a 14-bit down-counter that must be serviced periodically to prevent counter underflow. It can be used to reset the MCU or to generate a non-maskable interrupt/interrupt for a timer underflow. Because the timer operates with an independent, dedicated clock source, it is particularly useful in returning the MCU to a known state as a fail-safe mechanism when the system runs out of control. The IWDT can be triggered automatically on a reset, underflow, refresh error, or by a refresh of the count value in the registers. See section 26, Independent Watchdog Timer (IWDT) in User's Manual.

Table 1.4 Event link

Feature	Functional description
Event Link Controller (ELC)	The Event Link Controller (ELC) uses the interrupt requests generated by various peripheral modules as event signals to connect them to different modules, enabling direct interaction between the modules without CPU intervention. See section 18, Event Link Controller (ELC) in User's Manual.

Table 1.5 Direct memory access

Feature	Functional description
Data Transfer Controller (DTC)	A Data Transfer Controller (DTC) module is provided for transferring data when activated by an interrupt request. See section 17, Data Transfer Controller (DTC) in User's Manual.
DMA Controller (DMAC)	A 4-channel DMA Controller (DMAC) module is provided for transferring data without the CPU. When a DMA transfer request is generated, the DMAC transfers data stored at the transfer source address to the transfer destination address. See section 16, DMA Controller (DMAC) in User's Manual.

Table 1.3 系统(2之2)

Feature	功能说明
内存保护单元(MPU)	提供四个内存保护单元(MPU)和一个CPU堆栈指针监控功能用于内存保护。请参阅用户手册中的第15节，内存保护单元(MPU)。
看门狗定时器(WDT)	看门狗定时器(WDT)是一个14位递减计数器。它可用于在计数器下溢时复位MCU，因为系统已经失控并且无法刷新WDT。此外，下溢可能会产生不可屏蔽的中断或中断。可以设置一个允许刷新周期来刷新计数器，并作为检测系统何时失控的条件。请参阅用户手册中的第25节，看门狗定时器(WDT)。
独立看门狗定时器(IWDT)	独立看门狗定时器(IWDT)包含一个14位递减计数器，必须定期对其进行服务以防止计数器下溢。它可用于复位MCU或为定时器下溢产生不可屏蔽的中断中断。由于定时器使用独立的专用时钟源运行，因此当系统失控时，它在将MCU作为故障安全机制返回到已知状态时特别有用。IWDT可以在复位、下溢、刷新错误或寄存器中的计数值刷新时自动触发。请参见用户手册中的第26节，独立看门狗定时器(IWDT)。

Table 1.4 活动链接

Feature	功能说明
事件链接控制器(ELC)	EventLinkController(ELC)使用各种外围模块产生的中断请求作为事件信号，将它们连接到不同的模块，实现模块之间的直接交互，无需CPU干预。请参阅用户手册中的第18节，事件链接控制器(ELC)。

Table 1.5 直接内存访问

Feature	功能说明
数据传输控制器(DTC)	数据传输控制器(DTC)模块用于在被中断请求激活时传输数据。请参阅用户手册中的第17节，数据传输控制器(DTC)。
DMA Controller (DMAC)	提供了一个4通道DMA控制器(DMAC)模块，用于在没有CPU的情况下传输数据。当产生DMA传输请求时，DMAC将存储在传输源地址的数据传输到传输目标地址。请参阅用户手册中的第16节，DMA控制器(DMAC)。

RA生态工作室

Table 1.6 Timers

Feature	Functional description
General PWM Timer (GPT)	The General PWM Timer (GPT) is a 32-bit timer with 2 channels and a 16-bit timer with 6 channels. PWM waveforms can be generated by controlling the up-counter, down-counter, or the up- and down-counter. In addition, PWM waveforms can be generated for controlling brushless DC motors. The GPT can also be used as a general-purpose timer. See section 22, General PWM Timer (GPT) in User's Manual.
Port Output Enable for GPT (POEG)	Use the Port Output Enable for GPT (POEG) function to place the General PWM Timer (GPT) output pins in the output disable state. See section 21, Port Output Enable for GPT (POEG).
Asynchronous General Purpose Timer (AGT)	The Asynchronous General Purpose Timer (AGT) is a 16-bit timer that can be used for pulse output, external pulse width or period measurement, and counting of external events. This 16-bit timer consists of a reload register and a down-counter. The reload register and the down-counter are allocated to the same address, and they can be accessed with the AGT register. See section 23, Asynchronous General Purpose Timer (AGT) in User's Manual.
Realtime Clock (RTC)	The Realtime Clock (RTC) has two counting modes, calendar count mode and binary count mode, that are controlled by the register settings. For calendar count mode, the RTC has a 100-year calendar from 2000 to 2099 and automatically adjusts dates for leap years. For binary count mode, the RTC counts seconds and retains the information as a serial value. Binary count mode can be used for calendars other than the Gregorian (Western) calendar. See section 24, Realtime Clock (RTC) in User's Manual.

Table 1.7 Communication interfaces (1 of 2)

Feature	Functional description
Serial Communications Interface (SCI)	The Serial Communications Interface (SCI) is configurable to five asynchronous and synchronous serial interfaces: • Asynchronous interfaces (UART and asynchronous communications interface adapter (ACIA)) • 8-bit clock synchronous interface • Simple IIC (master-only) • Simple SPI • Smart card interface. The smart card interface complies with the ISO/IEC 7816-3 standard for electronic signals and transmission protocol. SCI0 and SCI1 have FIFO buffers to enable continuous and full-duplex communication, and the data transfer speed can be configured independently using an on-chip baud rate generator. See section 28, Serial Communications Interface (SCI) in User's Manual.
I^2C Bus Interface (IIC)	The 3-channel I^2C Bus Interface (IIC) module conforms with and provides a subset of the NXP I^2C bus (Inter-Integrated Circuit bus) interface functions. See section 29, I2C Bus Interface (IIC) in User's Manual.
Serial Peripheral Interface (SPI)	Two independent Serial Peripheral Interface (SPI) channels are capable of high-speed, full-duplex synchronous serial communications with multiple processors and peripheral devices. See section 31, Serial Peripheral Interface (SPI) in User's Manual.
Serial Sound Interface Enhanced (SSIE)	The Serial Sound Interface Enhanced (SSIE) peripheral provides functionality to interface with digital audio devices for transmitting PCM audio data over a serial bus with the MCU. The SSIE supports an audio clock frequency of up to 50 MHz, and can be operated as a slave or master receiver, transmitter, or transceiver to suit various applications. The SSIE includes 8-stage FIFO buffers in the receiver and transmitter, and supports interrupts and DMA-driven data reception and transmission. See section 33, Serial Sound Interface Enhanced (SSIE) in User's Manual.
Controller Area Network (CAN) module	The Controller Area Network (CAN) module provides functionality to receive and transmit data using a message-based protocol between multiple slaves and masters in electromagnetically noisy applications. The CAN module complies with the ISO 11898-1 (CAN 2.0A/CAN 2.0B) standard and supports up to 32 mailboxes, which can be configured for transmission or reception in normal mailbox and FIFO modes. Both standard (11-bit) and extended (29-bit) messaging formats are supported. See section 30, Controller Area Network (CAN) Module in User's Manual.

Table 1.6 Timers

Feature	功能说明
通用PWM定时器(GPT)	通用PWM定时器(GPT)是一个2通道的32位定时器和一个6通道的16位定时器。PWM波形可以通过控制加计数器、减计数器或加减计数器来产生。此外，可以生成PWM波形来控制无刷直流电机。GPT也可以用作通用定时器。请参阅用户手册中的第22节，通用PWM定时器(GPT)。
GPT(POEG)的端口输出使能	使用PortOutputEnableforGPT(POEG)功能将通用PWM定时器(GPT)输出引脚置于输出禁用状态。请参阅第21节，GPT(POEG)的端口输出启用。
异步通用 Timer (AGT)	异步通用定时器(AGT)是一个16位定时器，可用于脉冲输出、外部脉冲宽度或周期测量以及外部事件计数。这个16位定时器由一个重载寄存器和一个递减计数器组成。重载寄存器和递减计数器分配到同一个地址，可以通过AGT寄存器访问。请参阅用户手册中的第23节，异步通用定时器(AGT)。
实时时钟(RTC)	实时时钟(RTC)有两种计数模式，日历计数模式和二进制计数模式，由寄存器设置控制。对于日历计数模式，RTC有一个从2000年到2099年的100年日历，并自动调整闰年的日期。对于二进制计数模式，RTC会计算秒数并将信息保留为序列值。 二进制计数模式可用于公历（西方）以外的日历。 请参阅用户手册中的第24节，实时时钟(RTC)。

Table 1.7 通信接口（2个中的1个）

Feature	功能说明
串行通信接口(SCI)	串行通信接口(SCI)可配置为五个异步和同步串行接口： 异步接口（UART和异步通信接口适配器(ACIA)） 8位时钟同步接口 简单IIC（仅限主机） 简单SPI 智能卡接口。智能卡接口符合ISOIEC7816-3电子信号和传输协议标准。SCI0和SCI1具有FIFO缓冲器以实现连续和全双工通信，并且可以使用片内波特率发生器独立配置数据传输速度。请参阅用户手册中的第28节，串行通信接口(SCI)。
I2C总线接口(IIC)	3通道I2C总线接口(IIC)模块符合并提供NXP的子集 I2C总线（Inter-IntegratedCircuitbus）接口功能。请参阅用户手册中的第29节，I2C总线接口(IIC)。
串行外设接口(SPI)	两个独立的串行外围接口(SPI)通道能够与多个处理器和外围设备进行高速、全双工同步串行通信。请参阅用户手册中的第31节，串行外设接口(SPI)。
串行声音接口增强(SSIE)	增强型串行声音接口(SSIE)外设提供与数字音频设备接口的功能，用于通过串行总线与MCU传输PCM音频数据。SSIE支持高达50MHz的音频时钟频率，并可作为从属或主接收器、发送器或收发器运行，以适应各种应用。SSIE在接收器和发送器中包含8级FIFO缓冲区，并支持中断和DMA驱动的数据接收和发送。请参阅用户手册中的第33节，增强的串行声音接口(SSIE)。
控制器局域网(CAN)模块	控制器局域网(CAN)模块提供了在电磁噪声应用中使用基于消息的协议在多个从机和主机之间接收和传输数据的功能。CAN模块符合ISO11898-1(CAN2.0ACAN2.0B)标准，最多支持32个邮箱，可配置为普通邮箱和FIFO模式下的发送或接收。支持标准（11位）和扩展（29位）消息格式。请参阅用户手册中的第30节，控制器局域网(CAN)模块。

RA生态工作室

Table 1.7 Communication interfaces (2 of 2)

Feature	Functional description
USB 2.0 Full-Speed Module (USBFS)	The USB 2.0 Full-Speed Module (USBFS) can operate as a host controller or device controller. The module supports full-speed and low-speed (only for the host controller) transfer as defined in the Universal Serial Bus Specification 2.0. The module has an internal USB transceiver and supports all of the transfer types defined in the Universal Serial Bus Specification 2.0. The USB has buffer memory for data transfer, providing a maximum of 10 pipes. Pipes 1 to 9 can be assigned any endpoint number based on the peripheral devices used for communication or based on the user system. The MCU supports revision 1.2 of the Battery Charging specification. Because the MCU can be powered at 5 V, the USB LDO regulator provides the internal USB transceiver power supply at 3.3 V. See section 27, USB 2.0 Full-Speed Module (USBFS) in User's Manual.

Table 1.8 Analog

Feature	Functional description
14-bit A/D Converter (ADC14)	A 14-bit successive approximation A/D converter is provided. Up to 25 analog input channels are selectable. Temperature sensor output and internal reference voltage are selectable for conversion. The A/D conversion accuracy is selectable from 12-bit and 14-bit conversion making it possible to optimize the tradeoff between speed and resolution in generating a digital value. See section 35, 14-Bit A/D Converter (ADC14) in User's Manual.
12-Bit D/A Converter (DAC12)	The 12-Bit D/A Converter (DAC12) converts data and includes an output amplifier. See section 36, 12-Bit D/A Converter (DAC12) in User's Manual.
8-Bit D/A Converter (DAC8) for ACMPLP	The 8-Bit D/A Converter (DAC8) converts data and does not include an output amplifier (DAC8). The DAC8 is used only as the reference voltage for ACMPLP. See section 40, 8-Bit D/A Converter (DAC8) in User's Manual.
Temperature Sensor (TSN)	The on-chip Temperature Sensor (TSN) determines and monitors the die temperature for reliable operation of the device. The sensor outputs a voltage directly proportional to the die temperature, and the relationship between the die temperature and the output voltage is linear. The output voltage is provided to the ADC14 for conversion and can be further used by the end application. See section 37, Temperature Sensor (TSN) in User's Manual.
Low-Power Analog Comparator (ACMPLP)	The Low-Power Analog Comparator (ACMPLP) compares the reference input voltage and analog input voltage. The comparison result can be read through software and also be output externally. The reference voltage can be selected from an input to the CMPREFi(i = 0,1) pin, an internal 8-bit D/A converter output, or the internal reference voltage (Vref) generated internally in the MCU. The ACMPLP response speed can be set before starting an operation. Setting the high-speed mode decreases the response delay time, but increases current consumption. Setting the low-speed mode increases the response delay time, but decreases current consumption. See section 39, Low-Power Analog Comparator (ACMPLP) in User's Manual.
Operational Amplifier (OPAMP)	The Operational Amplifier (OPAMP) amplifies small analog input voltages and outputs the amplified voltages. A total of four differential operational amplifier units with two input pins and one output pin are provided. See section 38, Operational Amplifier (OPAMP) in User's Manual.

Table 1.9 Human machine interfaces

Feature	Functional description
Segment LCD Controller (SLCDC)	The Segment LCD Controller (SLCDC) provides the following functions: • Waveform A or B selectable • The LCD driver voltage generator can switch between an internal voltage boosting method, a capacitor split method, and an external resistance division method • Automatic output of segment and common signals based on automatic display data register read • The reference voltage generated when operating the voltage boost circuit can be selected in 16 steps (contrast adjustment) • The LCD can be made to blink. See section 45, Segment LCD Controller (SLCDC) in User's Manual.
Capacitive Touch Sensing Unit (CTSU)	The Capacitive Touch Sensing Unit (CTSU) measures the electrostatic capacitance of the touch sensor. Changes in the electrostatic capacitance are determined by software, which enables the CTSU to detect whether a finger is in contact with the touch sensor. The electrode surface of the touch sensor is usually enclosed within an electrical insulator so that fingers do not come into direct contact with the electrode. See section 41, Capacitive Touch Sensing Unit (CTSU) in User's Manual.

Table 1.7 通信接口（2个中的2个）

Feature	功能说明
USB2.0全速模块(USBFS)	USB2.0全速模块(USBFS)可以作为主机控制器或设备控制器运行。该模块支持通用串行总线规范2.0中定义的全速和低速（仅适用于主机控制器）传输。该模块有一个内部USB收发器，支持通用串行总线规范2.0中定义的所有传输类型。USB具有用于数据传输的缓冲存储器，最多可提供10个管道。可以根据用于通信的外围设备或根据用户系统为管道1到9分配任何端点编号。MCU支持电池充电规范的1.2版。由于MCU可以在5V下供电，USBLDO稳压器为内部USB收发器提供3.3V电源。请参阅用户手册中的第27节，USB2.0全速模块(USBFS)。

Table 1.8 Analog

Feature	功能说明
14-bit A/D Converter (ADC14)	提供了一个14位逐次逼近模数转换器。最多可选择25个模拟输入通道。可选择温度传感器输出和内部参考电压进行转换。AD转换精度可从12位和14位转换中选择，从而可以在生成数字值时优化速度和分辨率之间的折衷。请参阅用户手册中的第35节，14位AD转换器(ADC14)。
12-Bit D/A Converter (DAC12)	12位DA转换器(DAC12)转换数据并包含一个输出放大器。请参阅用户手册中的第36节，12位DA转换器(DAC12)。
用于ACMPLP的8位DA转换器(DAC8)	8位DA转换器(DAC8)转换数据，不包括输出放大器(DAC8)。DAC8仅用作ACMPLP的参考电压。请参阅用户手册中的第40节，8位DA转换器(DAC8)。
温度传感器(TSN)	片上温度传感器(TSN)确定并监控芯片温度，以确保器件可靠运行。传感器输出与管芯温度成正比的电压，管芯温度与输出电压呈线性关系。输出电压被提供给ADC14进行转换，并且可以被最终应用进一步使用。请参阅用户手册中的第37节，温度传感器(TSN)。
低功耗模拟比较器(ACMPLP)	低功耗模拟比较器(ACMPLP)比较参考输入电压和模拟输入电压。比较结果可以通过软件读取，也可以对外输出。参考电压可以从CMPREFi(i=0 1)引脚的输入、内部8位DA转换器输出或MCU内部生成的内部参考电压(Vref)中选择。可以在开始操作之前设置ACMPLP响应速度。设置高速模式会减少响应延迟时间，但会增加电流消耗。设置低速模式会增加响应延迟时间，但会降低电流消耗。请参阅用户手册中的第39节，低功耗模拟比较器(ACMPLP)。
运算放大器(OPAMP)	运算放大器(OPAMP)放大小的模拟输入电压并输出放大的电压。总共提供了四个差分运算放大器单元，具有两个输入引脚和一个输出引脚。请参阅用户手册中的第38节运算放大器(OPAMP)。

Table 1.9 人机界面

Feature	功能说明
段式LCD控制器(SLCDC)	段式LCD控制器(SLCDC)提供以下功能： 波形A或B可选 LCD驱动电压发生器可以在内部升压方法、电容分压方法和外部电阻分压方法之间切换 段和自动输出基于自动显示数据寄存器读取的通用信号 升压电路工作时产生的参考电压可以16级选择（对比度调整） LCD可以闪烁。请参阅用户手册中的第45节，段式LCD控制器(SLCDC)。
电容式触控感应单元(CTSU)	电容式触摸传感单元(CTSU)测量触摸传感器的静电电容。静电电容的变化由软件确定，使CTSU能够检测手指是否与触摸传感器接触。触摸传感器的电极表面通常封闭在电绝缘体中，因此手指不会直接接触电极。请参阅用户手册中的第41节，电容式触摸传感单元(CTSU)。

嵌入式生态工作室

Table 1.10 Data processing

Feature	Functional description
Cyclic Redundancy Check (CRC) calculator	The Cyclic Redundancy Check (CRC) calculator generates CRC codes to detect errors in the data. The bit order of CRC calculation results can be switched for LSB-first or MSB-first communication. Additionally, various CRC generation polynomials are available. The snoop function allows monitoring reads from and writes to specific addresses. This function is useful in applications that require CRC code to be generated automatically in certain events, such as monitoring writes to the serial transmit buffer and reads from the serial receive buffer. See section 32, Cyclic Redundancy Check (CRC) Calculator in User's Manual.
Data Operation Circuit (DOC)	The Data Operation Circuit (DOC) compares, adds, and subtracts 16-bit data. See section 42, Data Operation Circuit (DOC) in User's Manual.

Table 1.11 Security

Feature	Functional description
Secure Crypto Engine 5 (SCE5)	• Security algorithm - Symmetric algorithm: AES. • Other support features - TRNG (True Random Number Generator) - Hash-value generation: GHASH.

RA4M1 Group 1. Overview

Table 1.10 数据处理

Feature	功能说明
循环冗余校验(CRC)计算器	循环冗余校验(CRC)计算器生成CRC代码以检测数据中的错误。CRC计算结果的位顺序可以切换为LSB-first或MSB-first通信。此外，还可以使用各种CRC生成多项式。snoop功能允许监视对特定地址的读取和写入。此功能在需要在某些事件中自动生成CRC代码的应用中很有用，例如监视对串行发送缓冲区的写入和从串行接收缓冲区的读取。请参阅用户手册中的第32节，循环冗余校验(CRC)计算器。
数据运算电路(DOC)	数据运算电路(DOC)对16位数据进行比较、加法和减法。见第42节，用户手册中的数据操作电路(DOC)。

Table 1.11 Security

Feature	功能说明
安全加密引擎5(SCE5)	安全算法 对称算法：AES。 其他支持功能 TRNG（真随机数生成器）哈希值生成：GHASH。

RA生态工作室

1.2 Block Diagram

Figure 1.1 shows a block diagram of the MCU superset. Some individual devices within the group have a subset of the features.

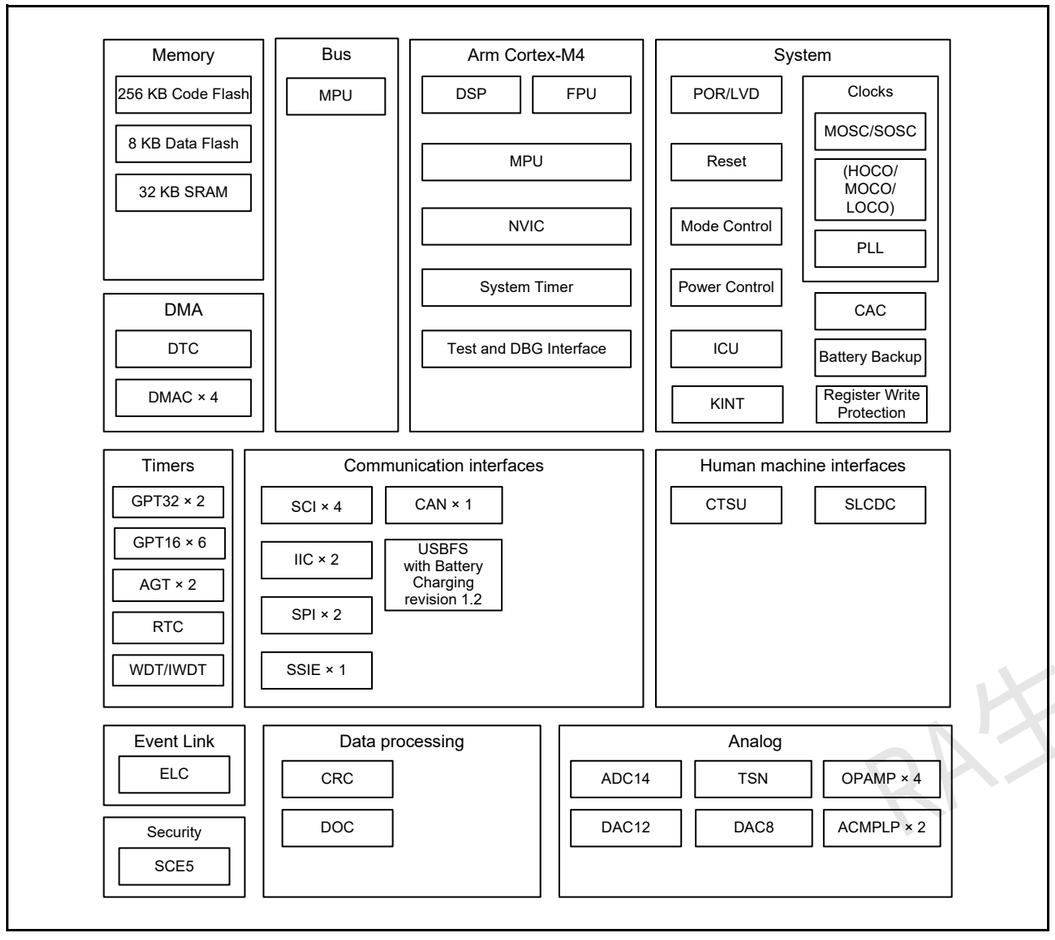

Figure 1.1 Block diagram

1.2 框图

图1.1显示了MCU超集的框图。组内的某些单独设备具有部分功能。

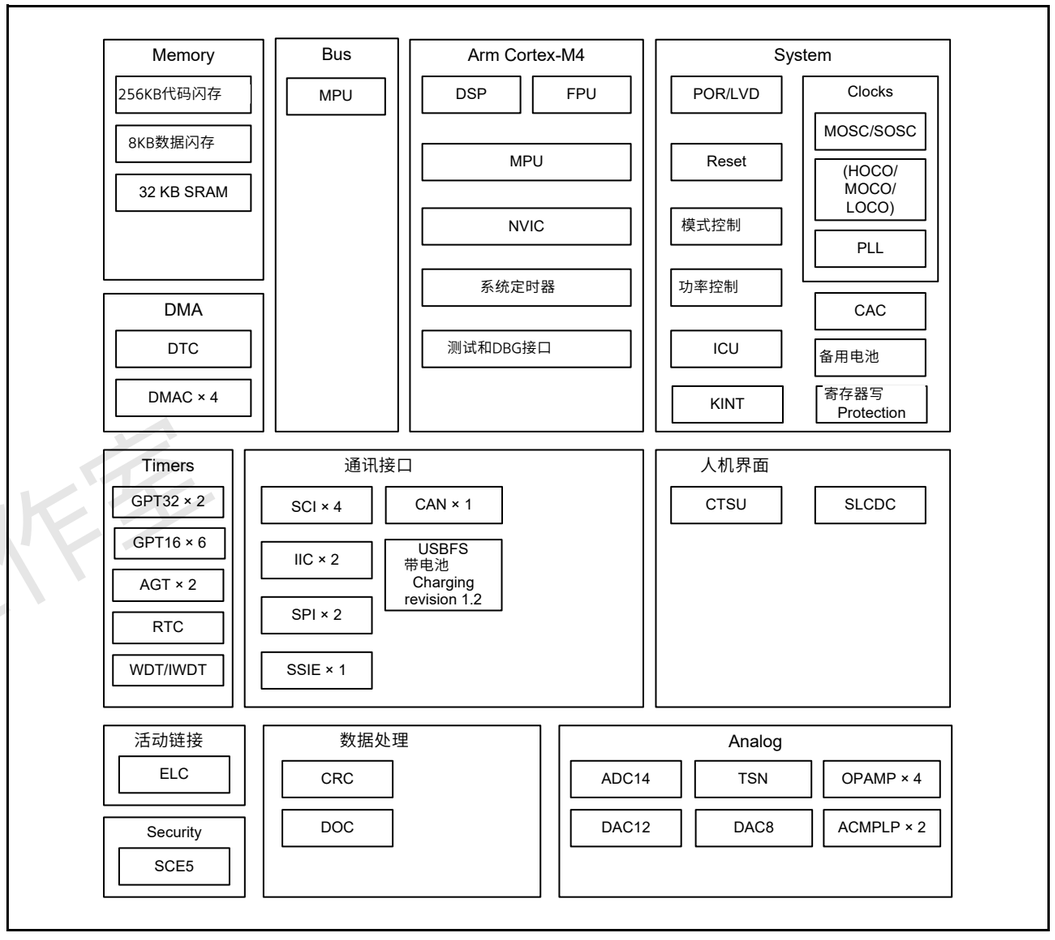

Figure 1.1 框图

RA生态工作室

1.3 Part Numbering

Figure 1.2 shows the product part number information, including memory capacity, and package type. Table 1.12 shows a product list.

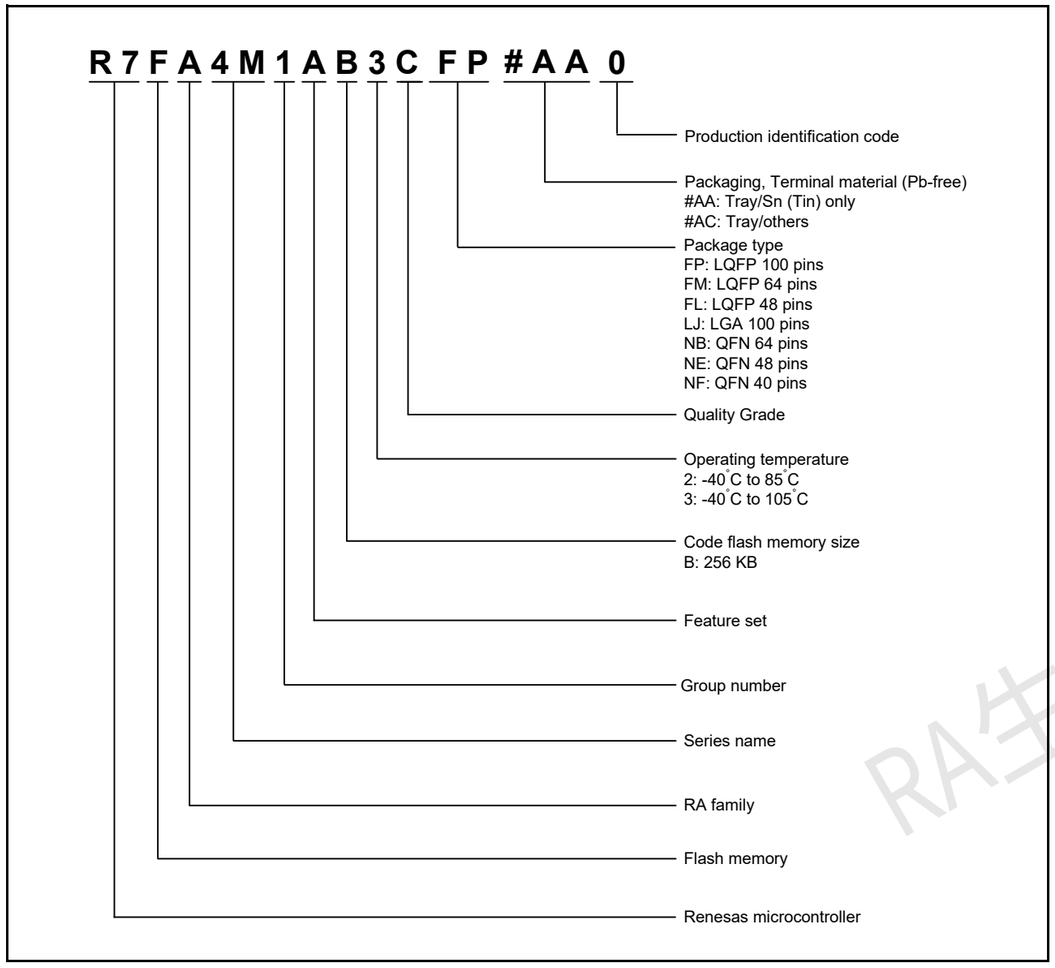

Figure 1.2 Part numbering scheme

Table 1.12 Product list

Product part number	Orderable part number	Package code	Code flash	Data flash	SRAM	Operating temperature
R7FA4M1AB3CFP	R7FA4M1AB3CFP#AA0	PLQP0100KB-B	256 KB	8 KB	32 KB	-40 to +105°C
R7FA4M1AB2CLJ	R7FA4M1AB2CLJ#AC0	PTLG0100JA-A				-40 to +85°C
R7FA4M1AB3CFM	R7FA4M1AB3CFM#AA0	PLQP0064KB-C				-40 to +105°C
R7FA4M1AB3CNB	R7FA4M1AB3CNB#AC0	PWQN0064LA-A				-40 to +105°C
R7FA4M1AB3CFL	R7FA4M1AB3CFL#AA0	PLQP0048KB-B				-40 to +105°C
R7FA4M1AB3CNE	R7FA4M1AB3CNE#AC0	PWQN0048KB-A				-40 to +105°C
R7FA4M1AB3CNF	R7FA4M1AB3CNF#AC0	PWQN0040KC-A				-40 to +105°C

1.3 零件编号

图1.2显示了产品部件号信息，包括内存容量和封装类型。表1.12显示了一个产品列表。

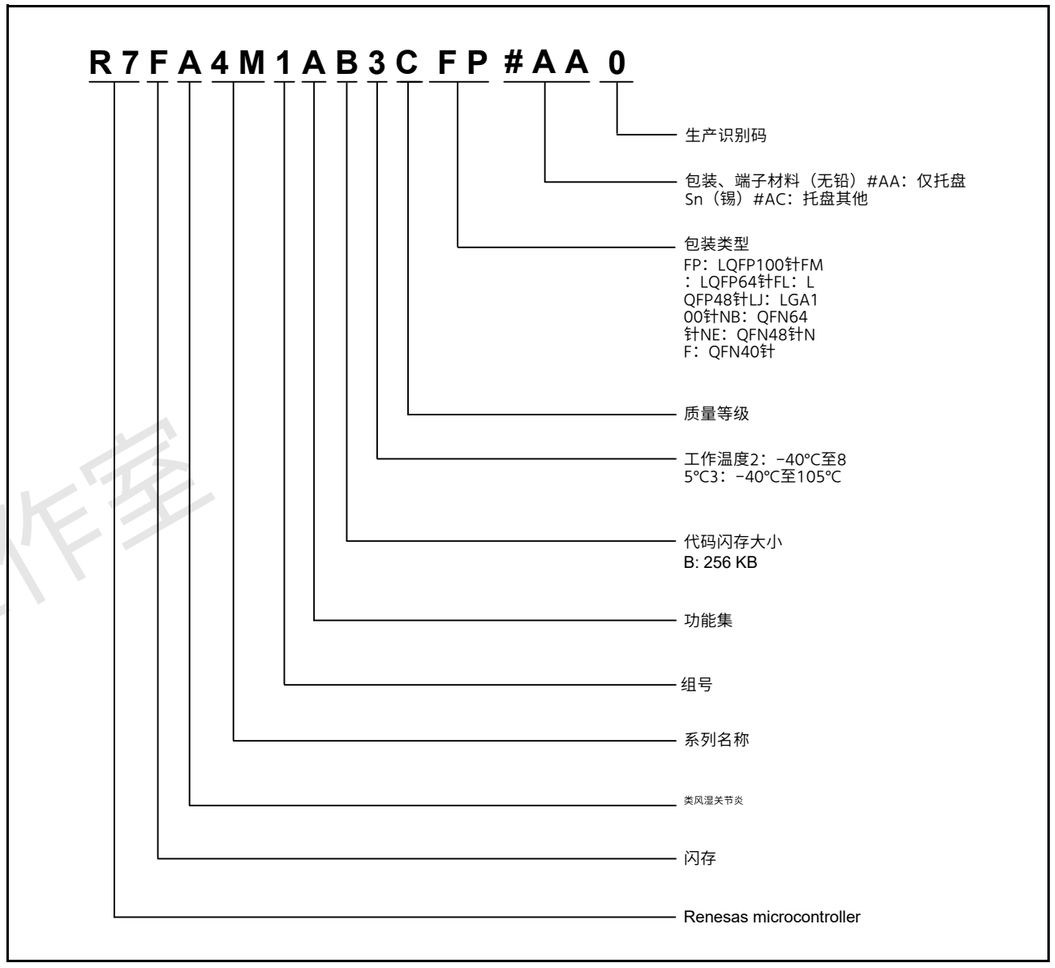

Figure 1.2 零件编号方案

Table 1.12 产品列表

产品部件号	可订购部件号	包装代码	代码闪存	数据闪存	SRAM	工作温度
R7FA4M1AB3CFP	R7FA4M1AB3CFP#AA0	PLQP0100KB-B	256 KB	8 KB	32 KB	-40 to +105°C
R7FA4M1AB2CLJ	R7FA4M1AB2CLJ#AC0	PTLG0100JA-A				-40 to +85°C
R7FA4M1AB3CFM	R7FA4M1AB3CFM#AA0	PLQP0064KB-C				-40 to +105°C
R7FA4M1AB3CNB	R7FA4M1AB3CNB#AC0	PWQN0064LA-A				-40 to +105°C
R7FA4M1AB3CFL	R7FA4M1AB3CFL#AA0	PLQP0048KB-B				-40 to +105°C
R7FA4M1AB3CNE	R7FA4M1AB3CNE#AC0	PWQN0048KB-A				-40 to +105°C
R7FA4M1AB3CNF	R7FA4M1AB3CNF#AC0	PWQN0040KC-A				-40 to +105°C

RA生态工作室

1.4 Function Comparison

Table 1.13 Function comparison

Part numbers		R7FA4M1AB3CFP	R7FA4M1AB2CLJ	R7FA4M1AB3CFM/ R7FA4M1AB3CNB	R7FA4M1AB3CFL/ R7FA4M1AB3CNE	R7FA4M1AB3CNF
Pin count		100	100	64	48	40
Package		LQFP	LGA	LQFP/QFN	LQFP/QFN	QFN
Code flash memory		256 KB				
Data flash memory		8 KB				
SRAM		32 KB				
	Parity	16 KB				
	ECC	16 KB				
System	CPU clock	48 MHz				
	Backup registers	512 bytes				
	ICU	Yes				
	KINT	8			5	3
Event control	ELC	Yes				
DMA	DTC	Yes				
	DMAC	4				
Bus	External bus	No				
Timers	GPT32	2				
	GPT16	6			4	2
	AGT	2			No	
	RTC	Yes				
	WDT/IWDT	Yes				
Communication	SCI	4				
	IIC	2				
	SPI	2				1
	SSIE	1		No		
	QSPI	No				
	SDHI	No				
	CAN	1				
	USBFS	Yes				
Analog	ADC14	25		18	14	11
	DAC12	1				
	DAC8	2				
	ACMPLP	2				1
	OPAMP	4	4	3	1	No
	TSN	Yes				
HMI	SLCDC	4 com × 38 seg or 8 com × 34 seg		4 com × 21 seg or 8 com × 17 seg	No	
	CTSU	27		24	15	10
Data processing	CRC	Yes				
	DOC	Yes				
Security		SCE5				

1.4 功能比较

Table 1.13 功能对比

零件号		R7FA4M1AB3CFP	R7FA4M1AB2CLJ	R7FA4M1AB3CFM/ R7FA4M1AB3CNB	R7FA4M1AB3CFL/ R7FA4M1AB3CNE	R7FA4M1AB3CNF
针数		100	100	64	48	40
Package		LQFP	LGA	LQFP/QFN	LQFP/QFN	QFN
代码闪存		256 KB				
数据闪存		8 KB				
SRAM		32 KB				
	Parity	16 KB				
	ECC	16 KB				
System	中央处理器时钟	48 MHz				
	备份寄存器	512 bytes				
	ICU	Yes				
	KINT	8			5	3
事件控制	ELC	Yes				
DMA	DTC	Yes				
	DMAC	4				
Bus	外部总线	No				
Timers	GPT32	2				
	GPT16	6			4	2
	AGT	2			No	
	RTC	Yes				
	WDT/IWDT	Yes				
Communication	SCI	4				
	IIC	2				
	SPI	2				1
	SSIE	1		No		
	QSPI	No				
	SDHI	No				
	CAN	1				
	USBFS	Yes				
Analog	ADC14	25		18	14	11
	DAC12	1				
	DAC8	2				
	ACMPLP	2				1
	OPAMP	4	4	3	1	No
	TSN	Yes				
HMI	SLCDC	4com×38seg或8com×34seg		4com×21seg或8com×17seg	No	
	CTSU	27		24	15	10
数据处理	CRC	Yes				
	DOC	Yes				
Security		SCE5				

RA生态工作室

1.5 Pin Functions

Table 1.14 Pin functions (1 of 4)

Function	Signal	I/O	Description
Power supply	VCC	Input	Power supply pin. Connect this pin to the system power supply. Connect it to VSS through a 0.1-μF capacitor. The capacitor should be placed close to the pin.
	VCL	I/O	Connect this pin to the VSS pin through the smoothing capacitor used to stabilize the internal power supply. Place the capacitor close to the pin.
	VSS	Input	Ground pin. Connect to the system power supply (0 V).
	VBATT	Input	Backup power supply pin
Clock	XTAL	Output	Pins for a crystal resonator. An external clock signal can be input through the EXTAL pin.
	EXTAL	Input	
	XCIN	Input	Input/output pins for the sub-clock oscillator. Connect a crystal resonator between XCOUT and XCIN.
	XCOUT	Output	
	CLKOUT	Output	Clock output pin
Operating mode control	MD	Input	Pins for setting the operating mode. The signal levels on these pins must not be changed during operation mode transition on release from the reset state.
System control	RES	Input	Reset signal input pin. The MCU enters the reset state when this signal goes low.
CAC	CACREF	Input	Measurement reference clock input pin
Interrupt	NMI	Input	Non-maskable interrupt request pin
	IRQ0 to IRQ12, IRQ14, IRQ15	Input	Maskable interrupt request pins
KINT	KR00 to KR07	Input	Key interrupt input pins. A key interrupt (KINT) can be generated by inputting a falling edge to the key interrupt input pins.
On-chip debug	TMS	I/O	On-chip emulator or boundary scan pins
	TDI	Input	
	TCK	Input	
	TDO	Output	
	SWDIO	I/O	Serial wire debug data input/output pin
	SWCLK	Input	Serial wire clock pin
	SWO	Output	Serial wire trace output pin
Battery Backup	VBATWIO0 to VBATWIO2	I/O	Output wakeup signal for the VBATT wakeup control function. External event input for the VBATT wakeup control function.
GPT	GTETRGA, GTETRGB	Input	External trigger input pin
	GTIOC0A to GTIOC7A, GTIOC0B to GTIOC7B	I/O	Input capture, output capture, or PWM output pin
	GTIU	Input	Hall sensor input pin U
	GTIV	Input	Hall sensor input pin V
	GTIW	Input	Hall sensor input pin W
	GTOUUP	Output	3-phase PWM output for BLDC motor control (positive U phase)
	GTOULO	Output	3-phase PWM output for BLDC motor control (negative U phase)
	GTOVUP	Output	3-phase PWM output for BLDC motor control (positive V phase)
	GTOVLO	Output	3-phase PWM output for BLDC motor control (negative V phase)
	GTOWUP	Output	3-phase PWM output for BLDC motor control (positive W phase)
	GTOWLO	Output	3-phase PWM output for BLDC motor control (negative W phase)

RA生态工作室

1.5 引脚功能

Table 1.14 引脚功能(1of4)

Function	Signal	I/O	Description
电源	VCC	Input	电源引脚。将此引脚连接到系统电源。通过一个0.1μF电容将其连接到VSS。电容应靠近引脚放置。
	VCL	I/O	通过用于稳定内部电源的平滑电容器将此引脚连接到VSS引脚。将电容器靠近引脚放置。
	VSS	Input	接地引脚。连接到系统电源(0V)。
	VBATT	Input	备用电源引脚
Clock	XTAL	Output	晶体谐振器的引脚。外部时钟信号可以通过输入EXTAL pin.
	EXTAL	Input	
	XCIN	Input	副时钟振荡器的输入输出引脚。在XCOUT和XCIN之间连接一个晶体谐振器。
	XCOUT	Output	
	CLKOUT	Output	时钟输出引脚
操作模式控制	MD	Input	用于设置操作模式的引脚。在从复位状态释放的操作模式转换期间，这些引脚上的信号电平不得更改。
系统控制	RES	Input	复位信号输入引脚。当该信号变低时，MCU进入复位状态。
CAC	CACREF	Input	测量参考时钟输入引脚
Interrupt	NMI	Input	不可屏蔽中断请求引脚
	IRQ0 to IRQ12, IRQ14, IRQ15	Input	可屏蔽中断请求引脚
KINT	KR00 to KR07	Input	按键中断输入引脚。 通过向按键中断输入引脚输入下降沿可以生成按键中断(KINT)。
On-chip debug	TMS	I/O	片上仿真器或边界扫描引脚
	TDI	Input	
	TCK	Input	
	TDO	Output	
	SWDIO	I/O	串行线调试数据输入输出引脚
	SWCLK	Input	串行线时钟引脚
	SWO	Output	串行线迹输出引脚
备用电池	VBATWIO0 to VBATWIO2	I/O	VBATT唤醒控制功能的输出唤醒信号。 VBATT唤醒控制功能的外部事件输入。
GPT	GTETRGA, GTETRGB	Input	外部触发输入引脚
	GTIOC0A to GTIOC7A, GTIOC0B to GTIOC7B	I/O	输入捕捉、输出捕捉或PWM输出引脚
	GTIU	Input	霍尔传感器输入引脚U
	GTIV	Input	霍尔传感器输入引脚V
	GTIW	Input	霍尔传感器输入引脚W
	GTOUUP	Output	用于BLDC电机控制的3相PWM输出（正U相）
	GTOULO	Output	用于BLDC电机控制的3相PWM输出（负U相）
	GTOVUP	Output	用于BLDC电机控制的3相PWM输出（正V相）
	GTOVLO	Output	用于BLDC电机控制的3相PWM输出（负V相）
	GTOWUP	Output	用于BLDC电机控制的3相PWM输出（正W相）
	GTOWLO	Output	用于BLDC电机控制的3相PWM输出（负W相）

Table 1.14 Pin functions (2 of 4)

Function	Signal	I/O	Description
AGT	AGTEE0, AGTEE1	Input	External event input enable signals
	AGTIO0, AGTIO1	I/O	External event input and pulse output pins
	AGTO0, AGTO1	Output	Pulse output pins
	AGTOA0, AGTOA1	Output	Output compare match A output pins
	AGTOB0, AGTOB1	Output	Output compare match B output pins
RTC	RTCOUT	Output	Output pin for 1-Hz/64-Hz clock
	RTCIC0 to RTCIC2	Input	Time capture event input pins
SCI	SCK0 to SCK2, SCK9	I/O	Clock (clock synchronous mode) input/output pins
	RXD0 to RXD2, RXD9	Input	Received data (asynchronous mode/clock synchronous mode) input pins
	TXD0 to TXD2, TXD9	Output	Transmitted data (asynchronous mode/clock synchronous mode) output pins
	CTS0_RTS0 to CTS2_RTS2, CTS9_RTS9	I/O	Input/output pins for controlling the start of transmission and reception (asynchronous mode/clock synchronous mode), active-low
	SCL0 to SCL2, SCL9	I/O	I^2C clock (simple IIC) input/output pins
	SDA0 to SDA2, SDA9	I/O	I^2C data (simple IIC) input/output pins
	SCK0 to SCK2, SCK9	I/O	Clock (simple SPI) input/output pins
	MISO0 to MISO2, MISO9	I/O	Slave transmission of data (simple SPI) input/output pins
	MOSI0 to MOSI2, MOSI9	I/O	Master transmission of data (simple SPI) input/output pins
	SS0 to SS2, SS9	Input	Slave-select input pins (simple SPI), active-low
IIC	SCL0, SCL1	I/O	Clock input/output pins
	SDA0, SDA1	I/O	Data input/output pins
SSIE	SSIBCK0	I/O	SSIE serial bit clock pin
	SSILRCK0/SSIFS0	I/O	Word select pins
	SSITXD0	Output	Serial data output pin
	SSIRXD0	Input	Serial data input pin
	AUDIO_CLK	Input	External clock pin for audio (input oversampling clock)
SPI	RSPCKA, RSPCKB	I/O	Clock input/output pin
	MOSIA, MOSIB	I/O	Input/output pins for data output from the master
	MISOA, MISOB	I/O	Input/output pins for data output from the slave
	SSLA0, SSLB0	I/O	Input/output pins for slave selection
	SSLA1, SSLA2, SSLA3, SSLB1, SSLB2, SSLB3	Output	Output pins for slave selection
CAN	CRX0	Input	Receive data
	CTX0	Output	Transmit data

Table 1.14 引脚功能(2of4)

Function	Signal	I/O	Description
AGT	AGTEE0, AGTEE1	Input	外部事件输入使能信号
	AGTIO0, AGTIO1	I/O	外部事件输入和脉冲输出引脚
	AGTO0, AGTO1	Output	脉冲输出引脚
	AGTOA0, AGTOA1	Output	输出比较匹配A输出引脚
	AGTOB0, AGTOB1	Output	输出比较匹配B输出引脚
RTC	RTCOUT	Output	1Hz64Hz时钟的输出引脚
	RTCIC0 to RTCIC2	Input	时间捕捉事件输入引脚
SCI	SCK0 to SCK2, SCK9	I/O	时钟（时钟同步模式）输入输出引脚
	RXD0 to RXD2, RXD9	Input	接收数据（异步模式时钟同步模式）输入引脚
	TXD0 to TXD2, TXD9	Output	传输数据（异步模式时钟同步模式）输出引脚
	CTS0_RTS0 to CTS2_RTS2, CTS9_RTS9	I/O	输入输出引脚用于控制发送和接收的开始（异步模式时钟同步模式），低电平有效
	SCL0 to SCL2, SCL9	I/O	I2C时钟（简单IIC）输入输出引脚
	SDA0 to SDA2, SDA9	I/O	I2C数据（简单IIC）输入输出引脚
	SCK0 to SCK2, SCK9	I/O	时钟（简单SPI）输入输出引脚
	MISO0 to MISO2, MISO9	I/O	从机传输数据（简单SPI）输入输出引脚
	MOSI0 to MOSI2, MOSI9	I/O	主传输数据（简单SPI）输入输出引脚
	SS0 to SS2, SS9	Input	从机选择输入引脚（简单SPI），低电平有效
IIC	SCL0, SCL1	I/O	时钟输入输出引脚
	SDA0, SDA1	I/O	数据输入输出引脚
SSIE	SSIBCK0	I/O	SSIE串行位时钟引脚
	SSILRCK0/SSIFS0	I/O	单词选择引脚
	SSITXD0	Output	串行数据输出引脚
	SSIRXD0	Input	串行数据输入引脚
	AUDIO_CLK	Input	音频外部时钟引脚（输入过采样时钟）
SPI	RSPCKA, RSPCKB	I/O	时钟输入输出引脚
	MOSIA, MOSIB	I/O	用于从主机输出数据的输入输出引脚
	MISOA, MISOB	I/O	从机数据输出的输入输出引脚
	SSLA0, SSLB0	I/O	从机选择的输入输出引脚
	SSLA1, SSLA2, SSLA3, SSLB1, SSLB2, SSLB3	Output	从机选择的输出引脚
CAN	CRX0	Input	接收数据
	CTX0	Output	传输数据

RA生态工作室

Table 1.14 Pin functions (3 of 4)

Function	Signal	I/O	Description
USBFS	VSS_USB	Input	Ground pin
	VCC_USB_LDO	Input	Power supply pin for USB LDO regulator
	VCC_USB	I/O	Input: USB transceiver power supply pin. Output: USB LDO regulator output pin. This pin should be connected to an external capacitor.
	USB_DP	I/O	D+ I/O pin of the USB on-chip transceiver. This pin should be connected to the D+ pin of the USB bus.
	USB_DM	I/O	D- I/O pin of the USB on-chip transceiver. This pin should be connected to the D- pin of the USB bus.
	USB_VBUS	Input	USB cable connection monitor pin. This pin should be connected to VBUS of the USB bus. The VBUS pin status (connected or disconnected) can be detected when the USB module is operating as a device controller.
	USB_EXICEN	Output	Low power control signal for external power supply (OTG) chip
	USB_VBUSEN	Output	VBUS (5 V) supply enable signal for external power supply chip
	USB_OVRCURA, USB_OVRCURB	Input	Connect the external overcurrent detection signals to these pins. Connect the VBUS comparator signals to these pins when the OTG power supply chip is connected.
	USB_ID	Input	Connect the MicroAB connector ID input signal to this pin during operation in OTG mode
Analog power supply	AVCC0	Input	Analog voltage supply pin
	AVSS0	Input	Analog voltage supply ground pin
	VREFH0	Input	Analog reference voltage supply pin
	VREFL0	Input	Reference power supply ground pin
	VREFH	Input	Analog reference voltage supply pin for D/A converter
	VREFL	Input	Analog reference ground pin for D/A converter
ADC14	AN000 to AN014, AN016 to AN025	Input	Input pins for the analog signals to be processed by the A/D converter
	ADTRG0	Input	Input pins for the external trigger signals that start the A/D conversion, active-low
DAC12	DA0	Output	Output pins for the analog signals to be processed by the D/A converter
Comparator output	VCOUT	Output	Comparator output pin
ACMPLP	CMPREF0, CMPREF1	Input	Reference voltage input pin
	CMPIN0, CMPIN1	Input	Analog voltage input pins
OPAMP	AMP0+ to AMP3+	Input	Analog voltage input pins
	AMP0- to AMP3-	Input	Analog voltage input pins
	AMP0O to AMP3O	Output	Analog voltage output pins
CTSU	TS00 to TS13, TS17 to TS22, TS27 to TS31, TS34, TS35	Input	Capacitive touch detection pins (touch pins)
	TSCAP	-	Secondary power supply pin for the touch driver

Table 1.14 引脚功能(3of4)

Function	Signal	I/O	Description
USBFS	VSS_USB	Input	接地引脚
	VCC_USB_LDO	Input	USBLDO稳压器的电源引脚
	VCC_USB	I/O	输入：USB收发器电源引脚。 输出：USBLDO稳压器输出引脚。该引脚应连接到外部电容器。
	USB_DP	I/O	USB片上收发器的D+IO引脚。该引脚应连接到 USB总线的D+引脚。
	USB_DM	I/O	USB片上收发器的DIO引脚。该引脚应连接到 USB总线的Dpin。
	USB_VBUS	Input	USB电缆连接监视器引脚。该引脚应连接到USB总线的VBUS。当USB模块作为设备控制器运行时，可以检测到VBUS引脚状态（连接或断开）。
	USB_EXICEN	Output	外部电源(OTG)芯片的低功耗控制信号
	USB_VBUSEN	Output	VBUS(5V)为外部供电芯片供电使能信号
	USB_OVRCURA, USB_OVRCURB	Input	将外部过电流检测信号连接到这些引脚。连接 当OTG电源芯片连接时，VBUS比较器向这些引脚发送信号。
	USB_ID	Input	在操作期间将MicroAB连接器ID输入信号连接到此引脚 OTG mode
模拟电源	AVCC0	Input	模拟电压电源引脚
	AVSS0	Input	模拟电压电源接地引脚
	VREFH0	Input	模拟参考电压电源引脚
	VREFL0	Input	参考电源接地引脚
	VREFH	Input	数模转换器的模拟参考电压电源引脚
	VREFL	Input	DA转换器的模拟参考接地引脚
ADC14	AN000 to AN014, AN016 to AN025	Input	AD转换器要处理的模拟信号的输入引脚
	ADTRG0	Input	用于启动AD转换的外部触发信号的输入引脚，低电平有效
DAC12	DA0	Output	由数模转换器处理的模拟信号的输出引脚
比较器输出	VCOUT	Output	比较器输出引脚
ACMPLP	CMPREF0, CMPREF1	Input	参考电压输入引脚
	CMPIN0, CMPIN1	Input	模拟电压输入引脚
OPAMP	AMP0+ to AMP3+	Input	模拟电压输入引脚
	AMP0- to AMP3-	Input	模拟电压输入引脚
	AMP0O to AMP3O	Output	模拟电压输出引脚
CTSU	TS00 to TS13, TS17 to TS22, TS27 to TS31, TS34, TS35	Input	电容式触摸检测引脚（触摸引脚）
	TSCAP	-	触摸驱动器的辅助电源引脚

RA生态工作室

Table 1.14 Pin functions (4 of 4)

Function	Signal	I/O	Description
I/O ports	P000 to P008, P010 to P015	I/O	General-purpose input/output pins
	P100 to P115	I/O	General-purpose input/output pins
	P200	Input	General-purpose input pin
	P201 to P206, P212, P213	I/O	General-purpose input/output pins
	P214, P215	Input	General-purpose input pins
	P300 to P307	I/O	General-purpose input/output pins
	P400 to P415	I/O	General-purpose input/output pins
	P500 to P505	I/O	General-purpose input/output pins
	P600 to P603, P608 to P610	I/O	General-purpose input/output pins
	P708	I/O	General-purpose input/output pins
	P808, P809	I/O	General-purpose input/output pins
	P914, P915	I/O	General-purpose input/output pins
SLCDC	VL1, VL2, VL3, VL4	I/O	Voltage pin for driving the LCD
	CAPH, CAPL	I/O	Capacitor connection pin for the LCD controller/driver
	COM0 to COM7	Output	Common signal output pins for the LCD controller/driver
	SEG00 to SEG37	Output	Segment signal output pins for the LCD controller/driver

Table 1.14 引脚功能（4个，共4个）

Function	Signal	I/O	Description
I/O ports	P000 to P008, P010 to P015	I/O	General-purpose input/output pins
	P100 to P115	I/O	General-purpose input/output pins
	P200	Input	通用输入引脚
	P201 to P206, P212, P213	I/O	General-purpose input/output pins
	P214, P215	Input	通用输入引脚
	P300 to P307	I/O	General-purpose input/output pins
	P400 to P415	I/O	General-purpose input/output pins
	P500 to P505	I/O	General-purpose input/output pins
	P600 to P603, P608 to P610	I/O	General-purpose input/output pins
	P708	I/O	General-purpose input/output pins
	P808, P809	I/O	General-purpose input/output pins
	P914, P915	I/O	General-purpose input/output pins
SLCDC	VL1, VL2, VL3, VL4	I/O	用于驱动LCD的电压引脚
	CAPH, CAPL	I/O	LCD控制器驱动器的电容连接引脚
	COM0 to COM7	Output	LCD控制器驱动器的公共信号输出引脚
	SEG00 to SEG37	Output	LCD控制器驱动器的段信号输出引脚

RA生态工作室

1.6 Pin Assignments

Figure 1.3 to Figure 1.6 show the pin assignments.

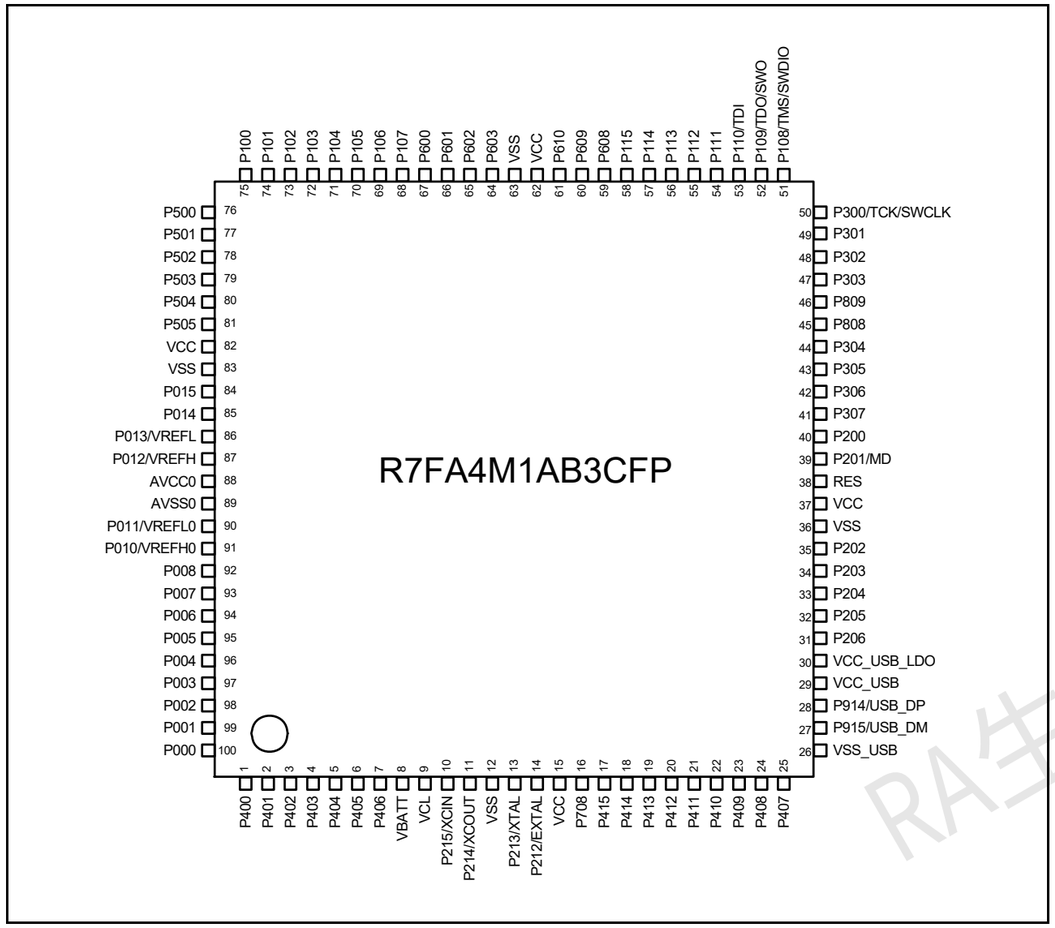

Figure 1.3 Pin assignment for 100-pin LQFP (top view)

1.6 引脚分配

图1.3至图1.6显示了引脚分配。

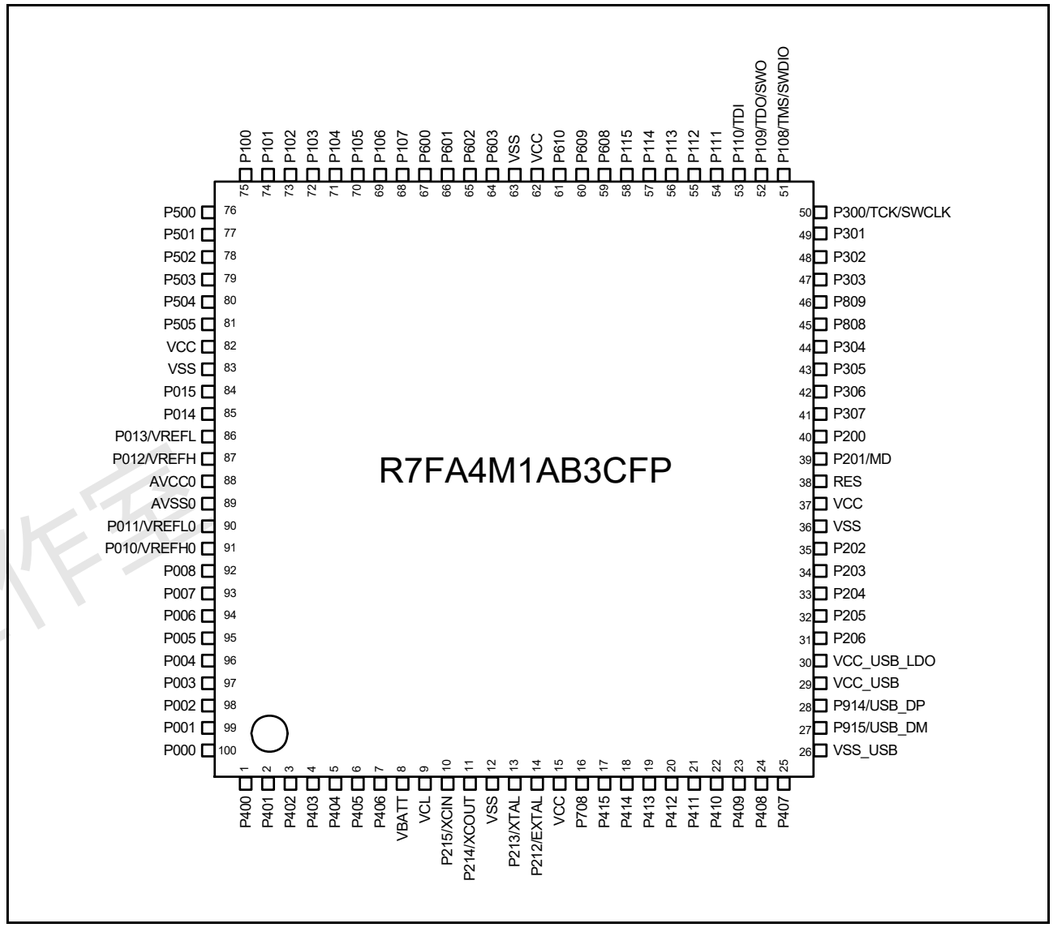

Figure 1.3 100引脚LQFP的引脚分配（顶视图）

RA生态工作室

R7FA4M1AB2CLJ

	A	B	C	D	E	F	G	H	J	K	
10	P407	P409	P412	VCC	P212/ EXTAL	P215/ XCIN	VCL	P403	P400	P000	10
9	P915/ USB_DM	P914/ USB_DP	P413	VSS	P213/ XTAL	P214/ XCOUT	VBATT	P405	P401	P001	9
8	VCC_ USB	VSS_ USB	VCC_US B_LDO	P411	P415	P708	P404	P003	P004	P002	8
7	P205	P204	P206	P408	P414	P406	P006	P007	P008	P005	7
6	VSS	VCC	P202	P203	P410	P402	P505	AVSS0	P011/ VREFL0	P010/ VREFH0	6
5	P200	P201/MD	P307	RES	P113	P600	P504	AVCC0	P013/ VREFL	P012/ VREFH	5
4	P305	P304	P808	P306	P115	P601	P503	P100	P015	P014	4
3	P809	P303	P110/TDI	P111	P609	P602	P107	P103	VSS	VCC	3
2	P300/ TCK/ SWCLK	P302	P301	P114	P610	P603	P106	P101	P501	P502	2
1	P108/ TMS/ SWDIO	P109/ TDO/ SWO	P112	P608	VCC	VSS	P105	P104	P102	P500	1
	A	B	C	D	E	F	G	H	J	K	

Figure 1.4 Pin assignment for 100-pin LGA (upper perspective view)

R7FA4M1AB2CLJ

	A	B	C	D	E	F	G	H	J	K	
10	P407	P409	P412	VCC	P212/ EXTAL	P215/ XCIN	VCL	P403	P400	P000	10
9	P915/ USB_DM	P914/ USB_DP	P413	VSS	P213/ XTAL	P214/ XCOUT	VBATT	P405	P401	P001	9
8	VCC_ USB	VSS_ USB	VCC_US B_LDO	P411	P415	P708	P404	P003	P004	P002	8
7	P205	P204	P206	P408	P414	P406	P006	P007	P008	P005	7
6	VSS	VCC	P202	P203	P410	P402	P505	AVSS0	P011/ VREFL0	P010/ VREFH0	6
5	P200	P201/MD	P307	RES	P113	P600	P504	AVCC0	P013/ VREFL	P012/ VREFH	5
4	P305	P304	P808	P306	P115	P601	P503	P100	P015	P014	4
3	P809	P303	P110/TDI	P111	P609	P602	P107	P103	VSS	VCC	3
2	P300/ TCK/ SWCLK	P302	P301	P114	P610	P603	P106	P101	P501	P502	2
1	P108/ TMS/ SWDIO	P109/ TDO/ SWO	P112	P608	VCC	VSS	P105	P104	P102	P500	1
	A	B	C	D	E	F	G	H	J	K	

Figure 1.4 100针LGA的针脚分配（俯视图）

RA生态工作室

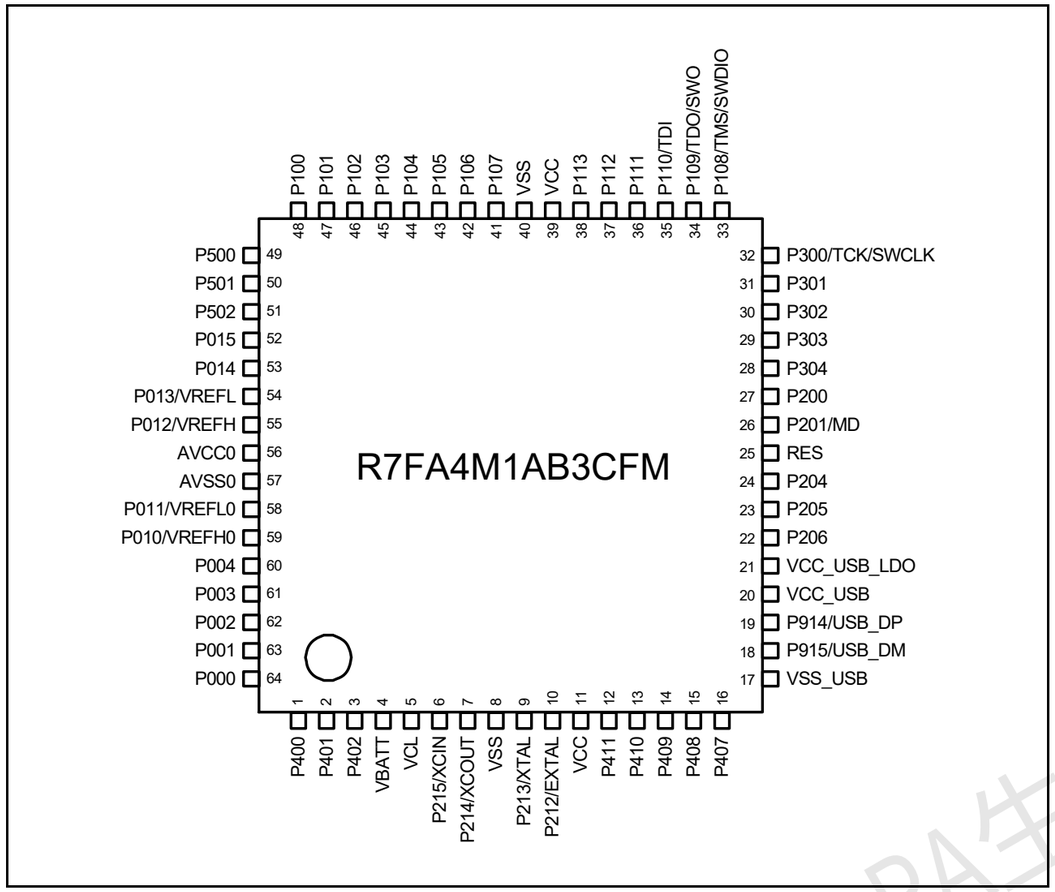

Figure 1.5 Pin assignment for 64-pin LQFP (top view)

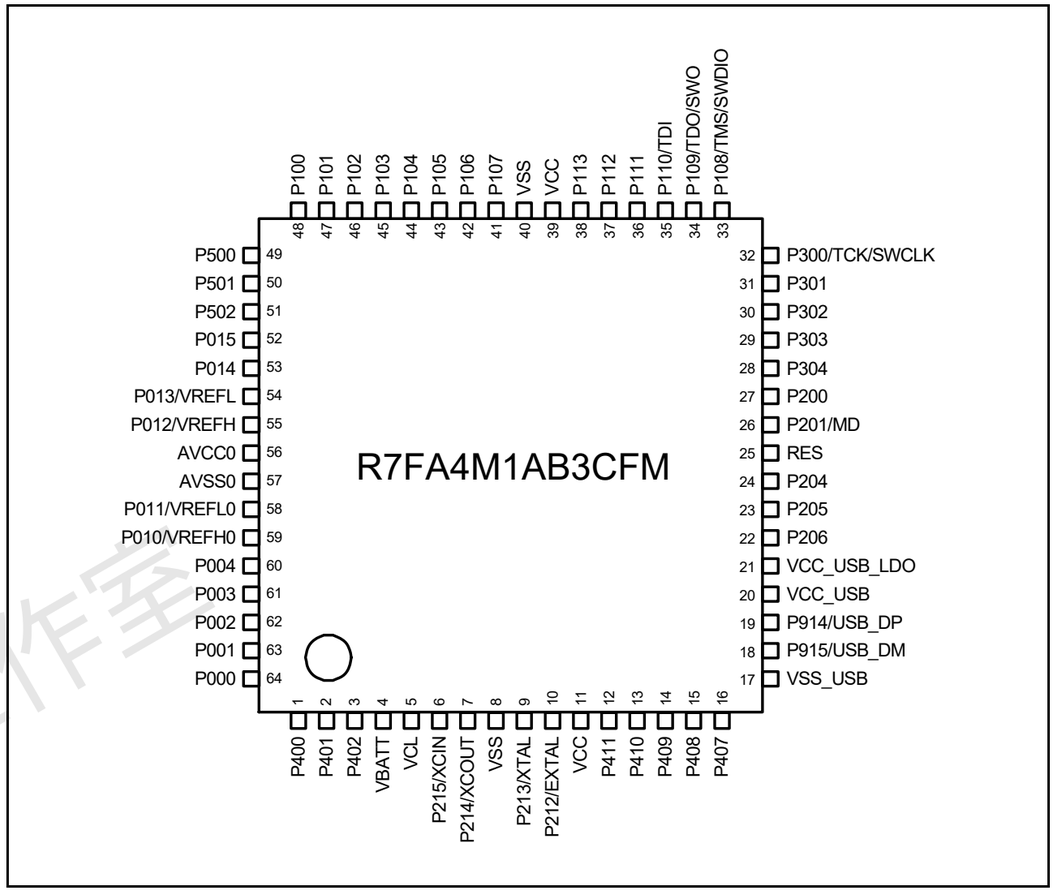

Figure 1.5 64引脚LQFP的引脚分配（顶视图）

RA生态工作室

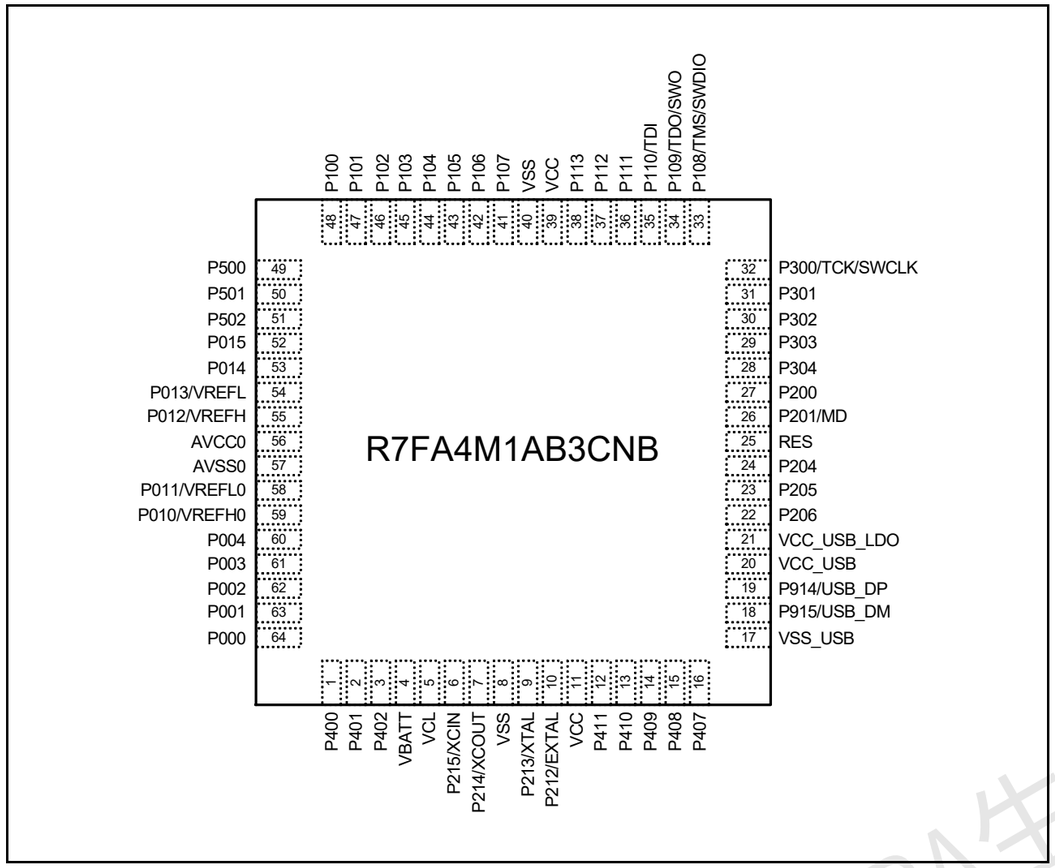

Figure 1.6 Pin assignment for 64-pin QFN (upper perspective view)

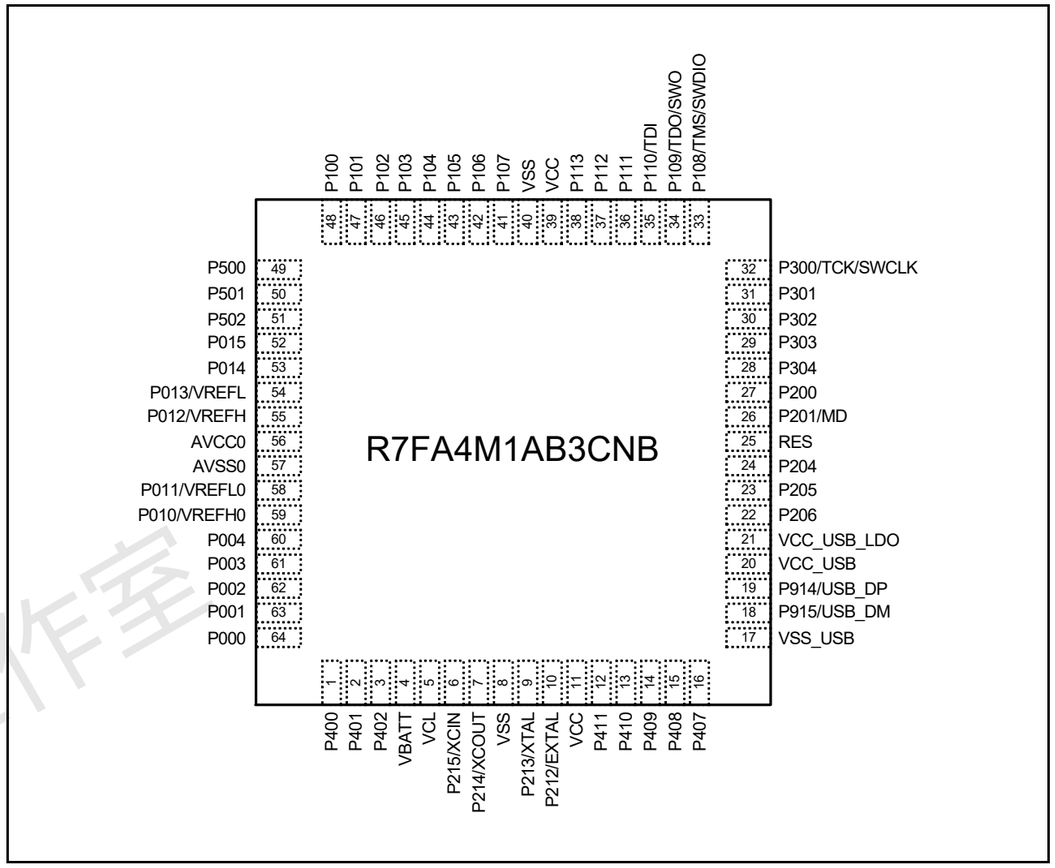

Figure 1.6 64引脚QFN的引脚分配（俯视图）

RA生态工作室

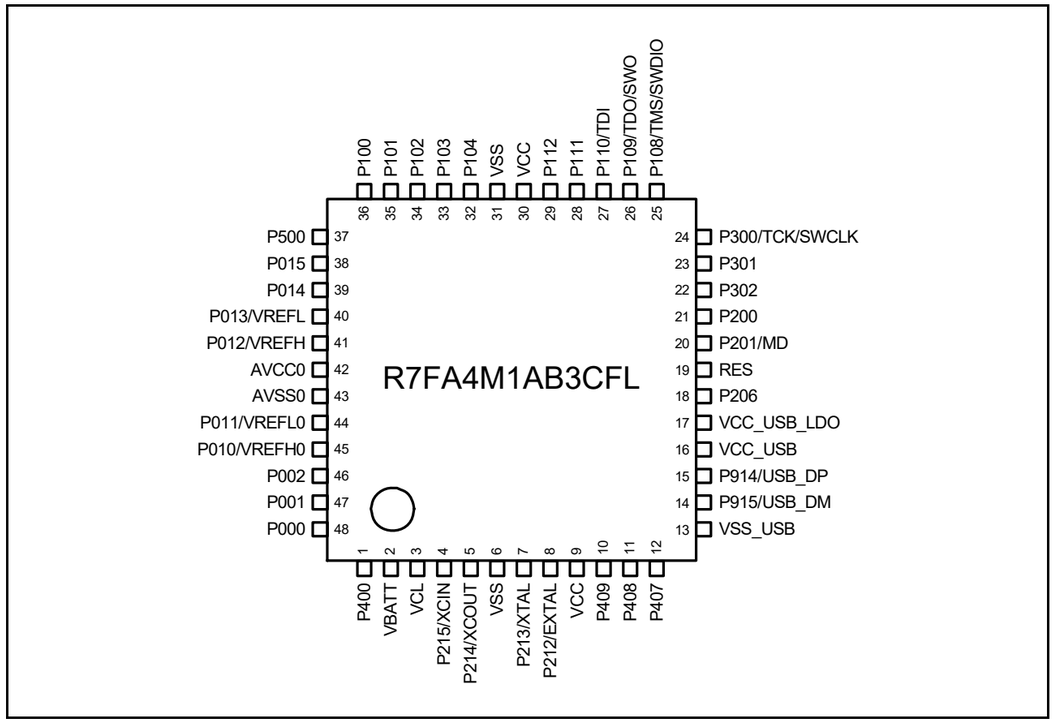

Figure 1.7 Pin assignment for 48-pin LQFP (top view)

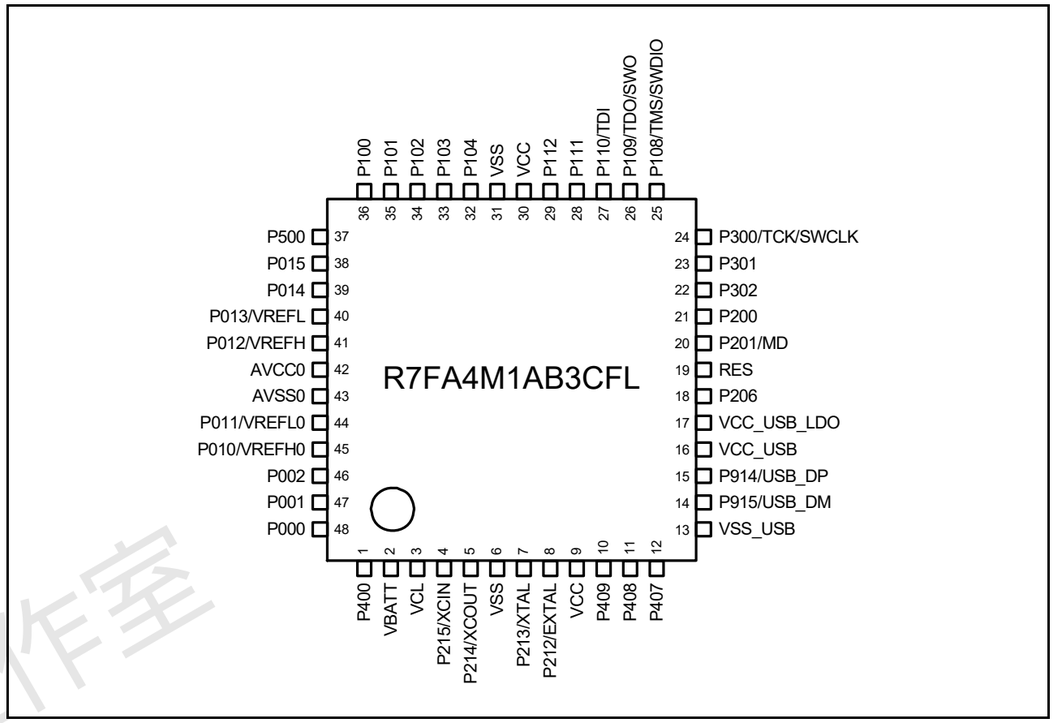

Figure 1.7 48引脚LQFP的引脚分配（顶视图）

RA生态工作室

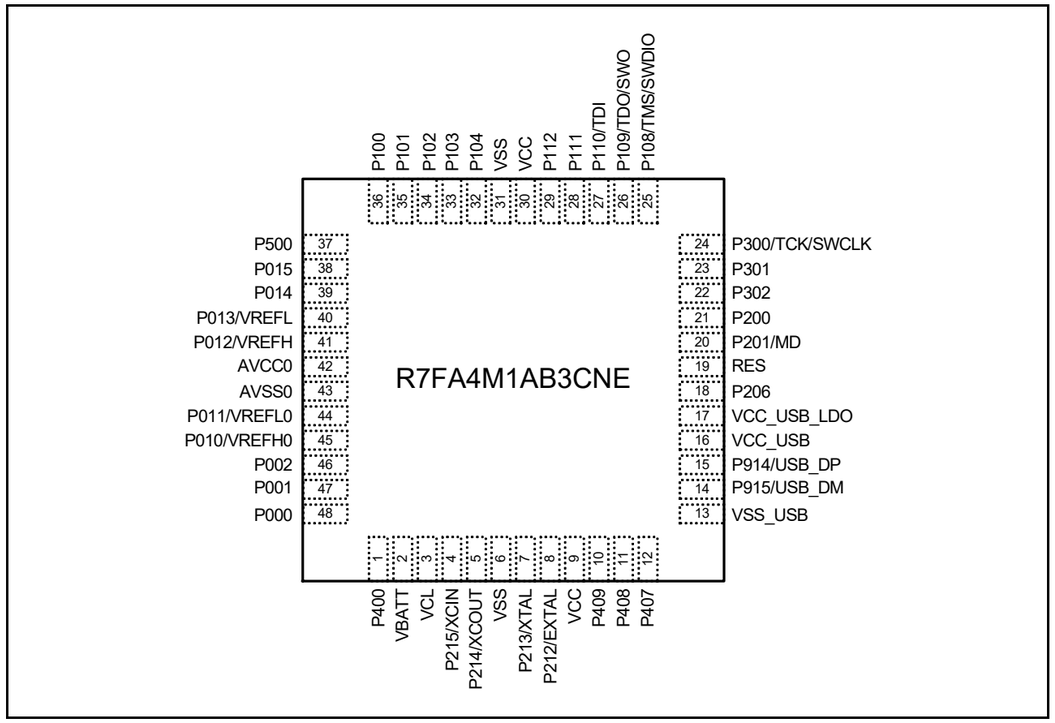

Figure 1.8 Pin assignment for 48-pin QFN (top view)

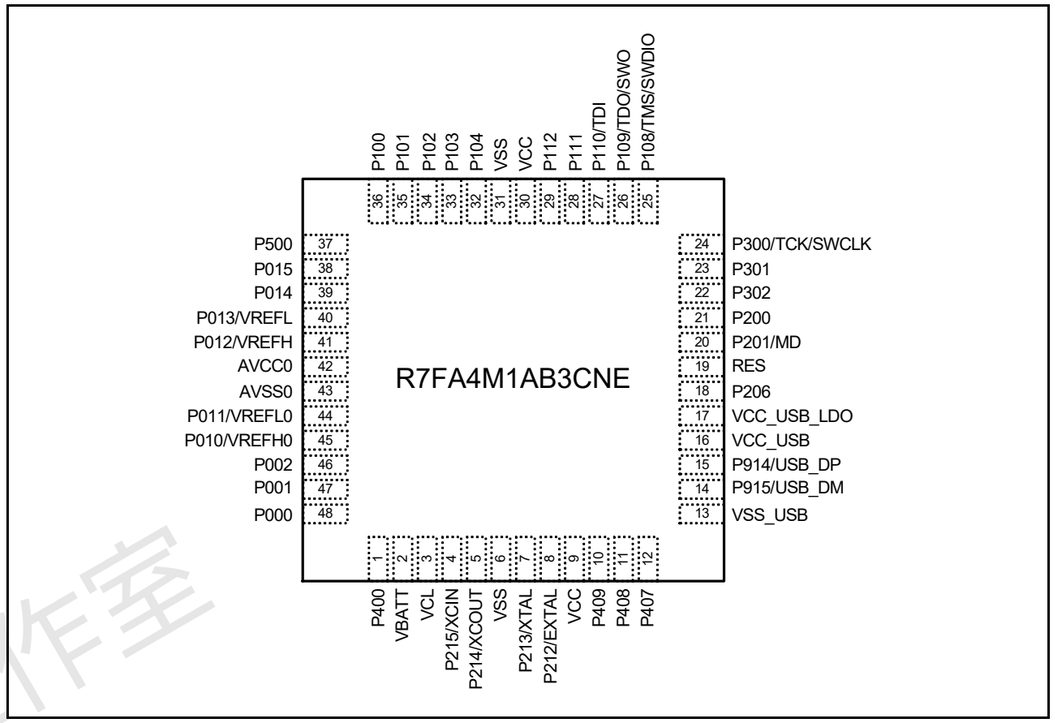

Figure 1.8 48引脚QFN的引脚分配（顶视图）

RA生态工作室

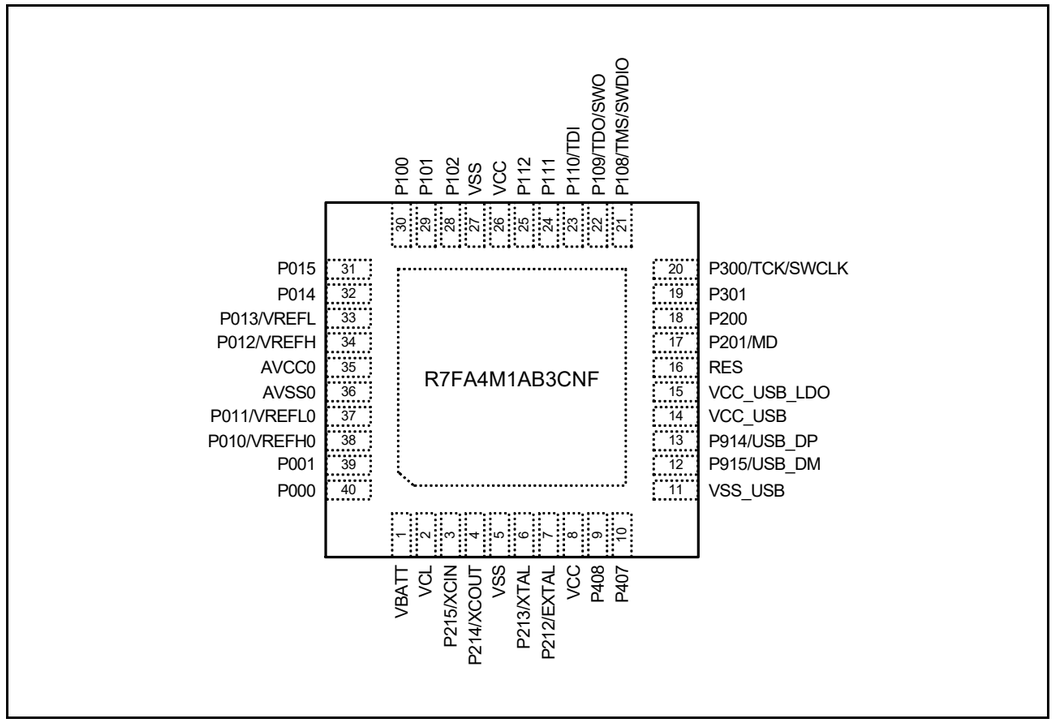

Figure 1.9 Pin assignment for 40-pin QFN (top view)

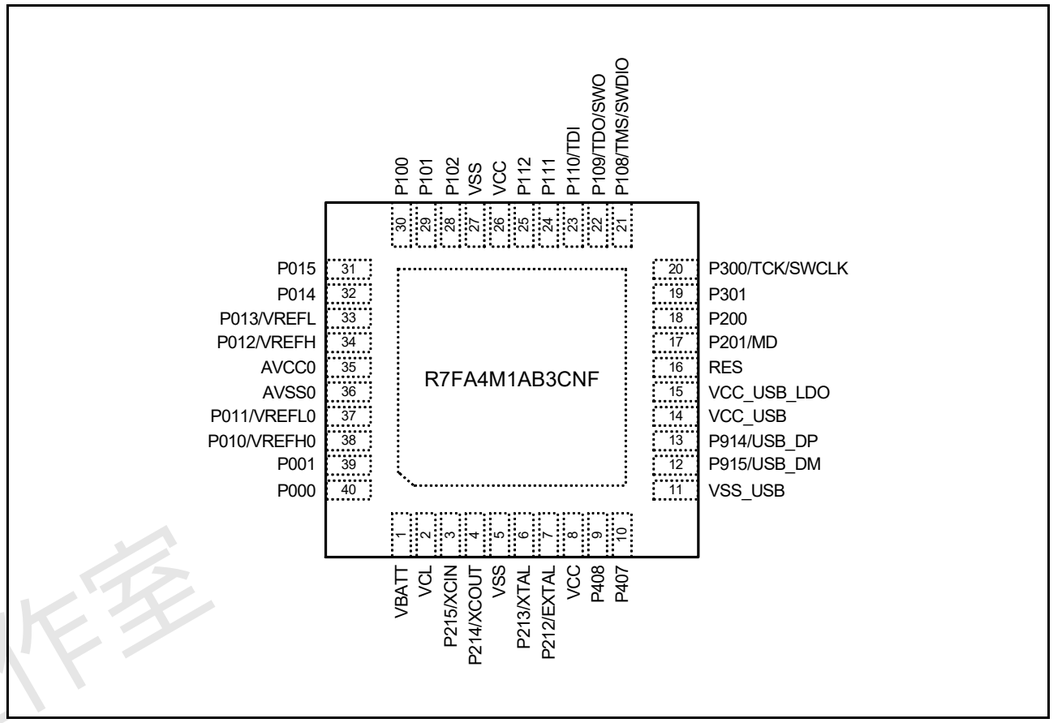

Figure 1.9 40引脚QFN的引脚分配（顶视图）

RA生态工作室

1.7 Pin Lists

Pin number							Power, System, Clock, Debug, CAC, VBATT	Interrupt	I/O ports	Timers				Communication interfaces					Analogs			HMI	
LQFP100	LGA100	LQFP64	QFN64	LQFP48	QFN48	QFN40				AGT	GPT_OPS, POEG	GPT	RTC	USBFS,CAN	SCI	IIC	SPI	SSIE	ADC14	DAC12, OPAMP	ACMPLP	SLCDC	CTSU
1	J10	1	1	1	1		CACREF	IRQ0	P400	AGTIO1		GTIOC6A			SCK0 SCK1	SCL0		AUDIO_CLK				SEG04	TS20
2	J9	2	2					IRQ5	P401		GTETRGA	GTIOC6B		CTX0	CTS0_ RTS0/ SS0 TXD1/ MOSI1/ SDA1	SDA0						SEG05	TS19
3	F6	3	3				VBATWIO0	IRQ4	P402	AGTIO0/ AGTIO1			RTCIC0	CRX0	RXD1/ MISO1/ SCL1							SEG06	TS18
4	H10						VBATWIO1		P403	AGTIO0/ AGTIO1		GTIOC3A	RTCIC1		CTS1_ RTS1/ SS1			SSIBCK0					TS17
5	G8						VBATWIO2		P404			GTIOC3B	RTCIC2					SSILRCK0/ SSIFS0					
6	H9								P405			GTIOC1A						SSITXD0					
7	F7								P406			GTIOC1B						SSIRXD0					
8	G9	4	4	2	2	1	VBATT																
9	G10	5	5	3	3	2	VCL																
10	F10	6	6	4	4	3	XCIN		P215														
11	F9	7	7	5	5	4	XCOUT		P214														
12	D9	8	8	6	6	5	VSS																
13	E9	9	9	7	7	6	XTAL	IRQ2	P213		GTETRGA	GTIOC0A			TXD1/ MOSI1/ SDA1								
14	E10	10	10	8	8	7	EXTAL	IRQ3	P212	AGTEE1	GTETRGB	GTIOC0B			RXD1/ MISO1/ SCL1								
15	D10	11	11	9	9	8	VCC																
16	F8								P708						RXD1/ MISO1/ SCL1		SSLA3						
17	E8							IRQ8	P415			GTIOC0A					SSLA2						
18	E7							IRQ9	P414			GTIOC0B					SSLA1						
19	C9								P413						CTS0_ RTS0/ SS0		SSLA0						
20	C10								P412						SCK0		RSPCKA						
21	D8	12	12					IRQ4	P411	AGTOA1	GTOVUP	GTIOC6A			TXD0/ MOSI0/ SDA0		MOSIA					SEG07	TS07
22	E6	13	13					IRQ5	P410	AGTOB1	GTOVLO	GTIOC6B			RXD0/ MISO0/ SCL0		MISOA					SEG08	TS06
23	B10	14	14	10	10			IRQ6	P409		GTOWUP	GTIOC5A		USB_EXICEN	TXD9/ MOSI9/ SDA9							SEG09	TS05
24	D7	15	15	11	11	9		IRQ7	P408		GTOWLO	GTIOC5B		USB_ID	CTS1_ RTS1/ SS1 RXD9/ MISO9/ SCL9	SCL0						SEG10	TS04
25	A10	16	16	12	12	10			P407	AGTIO0			RTCOUT	USB_VBUS	CTS0_ RTS0/ SS0	SDA0	SSLB3		ADTRG0			SEG11	TS03
26	B8	17	17	13	13	11	VSS_USB																
27	A9	18	18	14	14	12			P915					USB_DM									
28	B9	19	19	15	15	13			P914					USB_DP									

1.7 引脚列表

针号							电源，系统，时钟，调试，CAC，VBATT	Interrupt	I/O ports	Timers				通讯接口					Analogs			HMI	
LQFP100	LGA100	LQFP64	QFN64	LQFP48	QFN48	QFN40				AGT	GPT_OPS, POEG	GPT	RTC	USBFS,CAN	SCI	IIC	SPI	SSIE	ADC14	DAC12, OPAMP	ACMPLP	SLCDC	CTSU
1	J10	1	1	1	1		CACREF	IRQ0	P400	AGTIO1		GTIOC6A			SCK0 SCK1	SCL0		AUDIO_CLK				SEG04	TS20
2	J9	2	2					IRQ5	P401		GTETRGA	GTIOC6B		CTX0	CTS0_ RTS0/ SS0 TXD1/ MOSI1/ SDA1	SDA0						SEG05	TS19
3	F6	3	3				VBATWIO0	IRQ4	P402	AGTIO0/ AGTIO1			RTCIC0	CRX0	RXD1/ MISO1/ SCL1							SEG06	TS18
4	H10						VBATWIO1		P403	AGTIO0/ AGTIO1		GTIOC3A	RTCIC1		CTS1_ RTS1/ SS1			SSIBCK0					TS17
5	G8						VBATWIO2		P404			GTIOC3B	RTCIC2					SSILRCK0/ SSIFS0					
6	H9								P405			GTIOC1A						SSITXD0					
7	F7								P406			GTIOC1B						SSIRXD0					
8	G9	4	4	2	2	1	VBATT																
9	G10	5	5	3	3	2	VCL																
10	F10	6	6	4	4	3	XCIN		P215														
11	F9	7	7	5	5	4	XCOUT		P214														
12	D9	8	8	6	6	5	VSS																
13	E9	9	9	7	7	6	XTAL	IRQ2	P213		GTETRGA	GTIOC0A			TXD1/ MOSI1/ SDA1								
14	E10	10	10	8	8	7	EXTAL	IRQ3	P212	AGTEE1	GTETRGB	GTIOC0B			RXD1/ MISO1/ SCL1								
15	D10	11	11	9	9	8	VCC																
16	F8								P708						RXD1/ MISO1/ SCL1		SSLA3						
17	E8							IRQ8	P415			GTIOC0A					SSLA2						
18	E7							IRQ9	P414			GTIOC0B					SSLA1						
19	C9								P413						CTS0_ RTS0/ SS0		SSLA0						
20	C10								P412						SCK0		RSPCKA						
21	D8	12	12					IRQ4	P411	AGTOA1	GTOVUP	GTIOC6A			TXD0/ MOSI0/ SDA0		MOSIA					SEG07	TS07
22	E6	13	13					IRQ5	P410	AGTOB1	GTOVLO	GTIOC6B			RXD0/ MISO0/ SCL0		MISOA					SEG08	TS06
23	B10	14	14	10	10			IRQ6	P409		GTOWUP	GTIOC5A		USB_EXICEN	TXD9/ MOSI9/ SDA9							SEG09	TS05
24	D7	15	15	11	11	9		IRQ7	P408		GTOWLO	GTIOC5B		USB_ID	CTS1_ RTS1/ SS1 RXD9/ MISO9/ SCL9	SCL0						SEG10	TS04
25	A10	16	16	12	12	10			P407	AGTIO0			RTCOUT	USB_VBUS	CTS0_ RTS0/ SS0	SDA0	SSLB3		ADTRG0			SEG11	TS03
26	B8	17	17	13	13	11	VSS_USB																
27	A9	18	18	14	14	12			P915					USB_DM									
28	B9	19	19	15	15	13			P914					USB_DP									

RA生态工作室

Pin number							Power, System, Clock, Debug, CAC, VBATT	Interrupt	I/O ports	Timers				Communication interfaces					Analogs			HMI	
LQFP100	LGA100	LQFP64	QFN64	LQFP48	QFN48	QFN40				AGT	GPT_OPS, POEG	GPT	RTC	USBFS,CAN	SCI	IIC	SPI	SSIE	ADC14	DAC12, OPAMP	ACMPLP	SLCDC	CTSU
29	A8	20	20	16	16	14	VCC_USB																
30	C8	21	21	17	17	15	VCC_USB_LDO																
31	C7	22	22	18	18			IRQ0	P206		GTIU			USB_VBUSEN	RXD0/MISO0/SCL0	SDA1	SSLB1					SEG12	TS01
32	A7	23	23				CLKOUT	IRQ1	P205	AGTO1	GTIV	GTIOC4A		USB_OVRCURA	TXD0/MOSI0/SDA0 CTS9_RTS9/SS9	SCL1	SSLB0					SEG13	TSCAP
33	B7	24	24				CACREF		P204	AGTIO1	GTIW	GTIOC4B		USB_OVRCURB	SCK0 SCK9	SCL0	RSPCKB					SEG14	TS00
34	D6								P203			GTIOC5A			CTS2_RTS2/SS2 TXD9/MOSI9/SDA9		MOSIB					SEG15	TSCAP
35	C6								P202			GTIOC5B			SCK2 RXD9/MISO9/SCL9		MISOB					SEG16	
36	A6						VSS																
37	B6						VCC																
38	D5	25	25	19	19	16	RES																
39	B5	26	26	20	20	17	MD		P201														
40	A5	27	27	21	21	18		NMI	P200														
41	C5								P307													SEG17	
42	D4								P306													SEG18	
43	A4							IRQ8	P305													SEG19	
44	B4	28	28					IRQ9	P304			GTIOC7A										SEG20	TS11
45	C4								P808													SEG21	
46	A3								P809													SEG22	
47	B3	29	29						P303			GTIOC7B										SEG03/COM7	TS02
48	B2	30	30	22	22			IRQ5	P302		GTOUUP	GTIOC4A			TXD2/MOSI2/SDA2		SSLB3					SEG02/COM6	TS08
49	C2	31	31	23	23	19		IRQ6	P301	AGTIO0	GTOULO	GTIOC4B			RXD2/MISO2/SCL2 CTS9_RTS9/SS9		SSLB2					SEG01/COM5	TS09
50	A2	32	32	24	24	20	TCK/SWCLK		P300		GTOUUP	GTIOC0A					SSLB1						
51	A1	33	33	25	25	21	TMS/SWDIO		P108		GTOULO	GTIOC0B			CTS9_RTS9/SS9		SSLB0						
52	B1	34	34	26	26	22	TDO/SWO/CLKOUT		P109		GTOVUP	GTIOC1A		CTX0	SCK1 TXD9/MOSI9/SDA9		MOSIB					SEG23	TS10
53	C3	35	35	27	27	23	TDI	IRQ3	P110		GTOVLO	GTIOC1B		CRX0	CTS2_RTS2/SS2 RXD9/MISO9/SCL9		MISOB				VCOUT	SEG24	

RA4M1 Group 1. Overview

针号							电源，系统，时钟，调试，CAC，VBATT	Interrupt	I/O ports	Timers				通讯接口					Analogs			HMI	
LQFP100	LGA100	LQFP64	QFN64	LQFP48	QFN48	QFN40				AGT	GPT_OPS, POEG	GPT	RTC	USBFS,CAN	SCI	IIC	SPI	SSIE	ADC14	DAC12, OPAMP	ACMPLP	SLCDC	CTSU
29	A8	20	20	16	16	14	VCC_USB																
30	C8	21	21	17	17	15	VCC_USB_LDO																
31	C7	22	22	18	18			IRQ0	P206		GTIU			USB_VBUSEN	RXD0/MISO0/SCL0	SDA1	SSLB1					SEG12	TS01
32	A7	23	23				CLKOUT	IRQ1	P205	AGTO1	GTIV	GTIOC4A		USB_OVRCURA	TXD0/MOSI0/SDA0 CTS9_RTS9/SS9	SCL1	SSLB0					SEG13	TSCAP
33	B7	24	24				CACREF		P204	AGTIO1	GTIW	GTIOC4B		USB_OVRCURB	SCK0 SCK9	SCL0	RSPCKB					SEG14	TS00
34	D6								P203			GTIOC5A			CTS2_RTS2/SS2 TXD9/MOSI9/SDA9		MOSIB					SEG15	TSCAP
35	C6								P202			GTIOC5B			SCK2 RXD9/MISO9/SCL9		MISOB					SEG16	
36	A6						VSS																
37	B6						VCC																
38	D5	25	25	19	19	16	RES																
39	B5	26	26	20	20	17	MD		P201														
40	A5	27	27	21	21	18		NMI	P200														
41	C5								P307													SEG17	
42	D4								P306													SEG18	
43	A4							IRQ8	P305													SEG19	
44	B4	28	28					IRQ9	P304			GTIOC7A										SEG20	TS11
45	C4								P808													SEG21	
46	A3								P809													SEG22	
47	B3	29	29						P303			GTIOC7B										SEG03/COM7	TS02
48	B2	30	30	22	22			IRQ5	P302		GTOUUP	GTIOC4A			TXD2/MOSI2/SDA2		SSLB3					SEG02/COM6	TS08
49	C2	31	31	23	23	19		IRQ6	P301	AGTIO0	GTOULO	GTIOC4B			RXD2/MISO2/SCL2 CTS9_RTS9/SS9		SSLB2					SEG01/COM5	TS09
50	A2	32	32	24	24	20	TCK/SWCLK		P300		GTOUUP	GTIOC0A					SSLB1						
51	A1	33	33	25	25	21	TMS/SWDIO		P108		GTOULO	GTIOC0B			CTS9_RTS9/SS9		SSLB0						
52	B1	34	34	26	26	22	TDO/SWO/CLKOUT		P109		GTOVUP	GTIOC1A		CTX0	SCK1 TXD9/MOSI9/SDA9		MOSIB					SEG23	TS10
53	C3	35	35	27	27	23	TDI	IRQ3	P110		GTOVLO	GTIOC1B		CRX0	CTS2_RTS2/SS2 RXD9/MISO9/SCL9		MISOB				VCOUT	SEG24	

RA生态工作室

Pin number							Power, System, Clock, Debug, CAC, VBATT	Interrupt	I/O ports	Timers				Communication interfaces					Analogs			HMI	
LQFP100	LGA100	LQFP64	QFN64	LQFP48	QFN48	QFN40				AGT	GPT_OPS, POEG	GPT	RTC	USBFS,CAN	SCI	IIC	SPI	SSIE	ADC14	DAC12, OPAMP	ACMPLP	SLCDC	CTSU
54	D3	36	36	28	28	24		IRQ4	P111			GTIOC3A			SCK2 SCK9		RSPCKB					CAPH	TS12
55	C1	37	37	29	29	25			P112			GTIOC3B			TXD2/ MOSI2/ SDA2 SCK1		SSLB0	SSIBCK0				CAPL	TSCAP
56	E5	38	38						P113			GTIOC2A						SSILRCK0/ SSIFS0				SEG00/ COM4	TS27
57	D2								P114			GTIOC2B						SSIRXD0				SEG25	TS29
58	E4								P115			GTIOC4A						SSITXD0				SEG26	TS35
59	D1								P608			GTIOC4B										SEG27	
60	E3								P609			GTIOC5A										SEG28	
61	E2								P610			GTIOC5B										SEG29	
62	E1	39	39	30	30	26	VCC																
63	F1	40	40	31	31	27	VSS																
64	F2								P603			GTIOC7A			CTS9_ RTS9/ SS9							SEG30	
65	F3								P602			GTIOC7B			TXD9/ MOSI9/ SDA9							SEG31	
66	F4								P601			GTIOC6A			RXD9/ MISO9/ SCL9							SEG32	
67	F5								P600			GTIOC6B			SCK9							SEG33	
68	G3	41	41					KR07	P107			GTIOC0A										COM3	
69	G2	42	42					KR06	P106			GTIOC0B					SSLA3					COM2	
70	G1	43	43					KR05/ IRQ0	P105		GTETRGA	GTIOC1A					SSLA2					COM1	TS34
71	H1	44	44	32	32			KR04/ IRQ1	P104		GTETRGB	GTIOC1B			RXD0/ MISO0/ SCL0		SSLA1					COM0	TS13
72	H3	45	45	33	33			KR03	P103		GTOWUP	GTIOC2A		CTX0	CTS0_ RTS0/ SS0		SSLA0		AN019		CMPREF1	VL4	
73	J1	46	46	34	34	28		KR02	P102	AGTO0	GTOWLO	GTIOC2B		CRX0	SCK0 TXD2/ MOSI2/ SDA2		RSPCKA		AN020/ ADTRG0		CMPIN1	VL3	
74	H2	47	47	35	35	29		KR01/ IRQ1	P101	AGTEE0	GTETRGB	GTIOC5A			TXD0/ MOSI0/ SDA0 CTS1_ RTS1/ SS1	SDA1	MOSIA		AN021		CMPREF0	VL2	
75	H4	48	48	36	36	30		KR00/ IRQ2	P100	AGTIO0	GTETRGA	GTIOC5B			RXD0/ MISO0/ SCL0 SCK1	SCL1	MISOA		AN022		CMPIN0	VL1	
76	K1	49	49	37	37				P500	AGTOA0	GTIU	GTIOC2A		USB_VB USEN					AN016		CMPREF1	SEG34	
77	J2	50	50					IRQ11	P501	AGTOB0	GTIV	GTIOC2B		USB_OV RCURA	TXD1/ MOSI1/ SDA1				AN017		CMPIN1	SEG35	
78	K2	51	51					IRQ12	P502		GTIW	GTIOC3B		USB_OV RCURB	RXD1/ MISO1/ SCL1				AN018		CMPREF0	SEG36	
79	G4								P503					USB_EXI CEN	SCK1				AN023		CMPIN0	SEG37	
80	G5								P504					USB_ID	CTS1_ RTS1/ SS1				AN024				
81	G6							IRQ14	P505										AN025				
82	K3						VCC																

针号							电源，系统，时钟，调试，CAC，VBATT	Interrupt	I/O ports	Timers				通讯接口					Analogs			HMI	
LQFP100	LGA100	LQFP64	QFN64	LQFP48	QFN48	QFN40				AGT	GPT_OPS, POEG	GPT	RTC	USBFS,CAN	SCI	IIC	SPI	SSIE	ADC14	DAC12, OPAMP	ACMPLP	SLCDC	CTSU
54	D3	36	36	28	28	24		IRQ4	P111			GTIOC3A			SCK2 SCK9		RSPCKB					CAPH	TS12
55	C1	37	37	29	29	25			P112			GTIOC3B			TXD2/ MOSI2/ SDA2 SCK1		SSLB0	SSIBCK0				CAPL	TSCAP
56	E5	38	38						P113			GTIOC2A						SSILRCK0/ SSIFS0				SEG00/ COM4	TS27
57	D2								P114			GTIOC2B						SSIRXD0				SEG25	TS29
58	E4								P115			GTIOC4A						SSITXD0				SEG26	TS35
59	D1								P608			GTIOC4B										SEG27	
60	E3								P609			GTIOC5A										SEG28	
61	E2								P610			GTIOC5B										SEG29	
62	E1	39	39	30	30	26	VCC																
63	F1	40	40	31	31	27	VSS																
64	F2								P603			GTIOC7A			CTS9_ RTS9/ SS9							SEG30	
65	F3								P602			GTIOC7B			TXD9/ MOSI9/ SDA9							SEG31	
66	F4								P601			GTIOC6A			RXD9/ MISO9/ SCL9							SEG32	
67	F5								P600			GTIOC6B			SCK9							SEG33	
68	G3	41	41					KR07	P107			GTIOC0A										COM3	
69	G2	42	42					KR06	P106			GTIOC0B					SSLA3					COM2	
70	G1	43	43					KR05/ IRQ0	P105		GTETRGA	GTIOC1A					SSLA2					COM1	TS34
71	H1	44	44	32	32			KR04/ IRQ1	P104		GTETRGB	GTIOC1B			RXD0/ MISO0/ SCL0		SSLA1					COM0	TS13
72	H3	45	45	33	33			KR03	P103		GTOWUP	GTIOC2A		CTX0	CTS0_ RTS0/ SS0		SSLA0		AN019		CMPREF1	VL4	
73	J1	46	46	34	34	28		KR02	P102	AGTO0	GTOWLO	GTIOC2B		CRX0	SCK0 TXD2/ MOSI2/ SDA2		RSPCKA		AN020/ ADTRG0		CMPIN1	VL3	
74	H2	47	47	35	35	29		KR01/ IRQ1	P101	AGTEE0	GTETRGB	GTIOC5A			TXD0/ MOSI0/ SDA0 CTS1_ RTS1/ SS1	SDA1	MOSIA		AN021		CMPREF0	VL2	
75	H4	48	48	36	36	30		KR00/ IRQ2	P100	AGTIO0	GTETRGA	GTIOC5B			RXD0/ MISO0/ SCL0 SCK1	SCL1	MISOA		AN022		CMPIN0	VL1	
76	K1	49	49	37	37				P500	AGTOA0	GTIU	GTIOC2A		USB_VB USEN					AN016		CMPREF1	SEG34	
77	J2	50	50					IRQ11	P501	AGTOB0	GTIV	GTIOC2B		USB_OV RCURA	TXD1/ MOSI1/ SDA1				AN017		CMPIN1	SEG35	
78	K2	51	51					IRQ12	P502		GTIW	GTIOC3B		USB_OV RCURB	RXD1/ MISO1/ SCL1				AN018		CMPREF0	SEG36	
79	G4								P503					USB_EXI CEN	SCK1				AN023		CMPIN0	SEG37	
80	G5								P504					USB_ID	CTS1_ RTS1/ SS1				AN024				
81	G6							IRQ14	P505										AN025				
82	K3						VCC																

RA生态工作室

Pin number							Power, System, Clock, Debug, CAC, VBATT	Interrupt	I/O ports	Timers				Communication interfaces					Analogs			HMI	
LQFP100	LGA100	LQFP64	QFN64	LQFP48	QFN48	QFN40				AGT	GPT_OPS, POEG	GPT	RTC	USBFS,CAN	SCI	IIC	SPI	SSIE	ADC14	DAC12, OPAMP	ACMPLP	SLCDC	CTSU
83	J3						VSS																
84	J4	52	52	38	38	31		IRQ7	P015										AN010				TS28
85	K4	53	53	39	39	32			P014										AN009	DA0			
86	J5	54	54	40	40	33	VREFL		P013										AN008	AMP1+			
87	K5	55	55	41	41	34	VREFH		P012										AN007	AMP1-			
88	H5	56	56	42	42	35	AVCC0																
89	H6	57	57	43	43	36	AVSS0																
90	J6	58	58	44	44	37	VREFL0	IRQ15	P011										AN006	AMP2+			TS31
91	K6	59	59	45	45	38	VREFH0		P010										AN005	AMP2-			TS30
92	J7								P008										AN014				
93	H7								P007										AN013	AMP3O			
94	G7								P006										AN012	AMP3-			
95	K7							IRQ10	P005										AN011	AMP3+			
96	J8	60	60					IRQ3	P004										AN004	AMP2O			
97	H8	61	61						P003										AN003	AMP1O			
98	K8	62	62	46	46			IRQ2	P002										AN002	AMP0O			
99	K9	63	63	47	47	39		IRQ7	P001										AN001	AMP0-			TS22
100	K10	64	64	48	48	40		IRQ6	P000										AN000	AMP0+			TS21

针号						电源，系统，时钟，调试，CAC，VBATT	Interrupt	I/O ports	Timers				通讯接口					Analogs			HMI	
LQFP100	LGA100	LQFP64	QFN64	LQFP48	QFN48	QFN40				AGT	GPT_OPS, POEG	GPT	RTC	USBFS,CAN	SCI	IIC	SPI	SSIE	ADC14	DAC12, OPAMP	ACMPLP	SLCDC	CTSU
83	J3						VSS																
84	J4	52	52	38	38	31		IRQ7	P015										AN010				TS28
85	K4	53	53	39	39	32			P014										AN009	DA0			
86	J5	54	54	40	40	33	VREFL		P013										AN008	AMP1+			
87	K5	55	55	41	41	34	VREFH		P012										AN007	AMP1-			
88	H5	56	56	42	42	35	AVCC0																
89	H6	57	57	43	43	36	AVSS0																
90	J6	58	58	44	44	37	VREFL0	IRQ15	P011										AN006	AMP2+			TS31
91	K6	59	59	45	45	38	VREFH0		P010										AN005	AMP2-			TS30
92	J7								P008										AN014				
93	H7								P007										AN013	AMP3O			
94	G7								P006										AN012	AMP3-			
95	K7							IRQ10	P005										AN011	AMP3+			
96	J8	60	60					IRQ3	P004										AN004	AMP2O			
97	H8	61	61						P003										AN003	AMP1O			
98	K8	62	62	46	46			IRQ2	P002										AN002	AMP0O			
99	K9	63	63	47	47	39		IRQ7	P001										AN001	AMP0-			TS22
100	K10	64	64	48	48	40		IRQ6	P000										AN000	AMP0+			TS21

RA生态工作室

2. Electrical Characteristics

Unless otherwise specified, the electrical characteristics of the MCU are defined under the following conditions:

VCC*1 = AVCC0 = VCC_USB*2 = VCC_USB_LDO*2 = 1.6 to 5.5V, VREFH = VREFH0 = 1.6 to AVCC0, VBATT = 1.6 to 3.6V, VSS = AVSS0 = VREFL = VREFL0 = VSS_USB = 0V, $T_a = T_{opr}$

Note 1. The typical condition is set to VCC = 3.3V.
Note 2. When USBFS is not used.

Figure 2.1 shows the timing conditions.

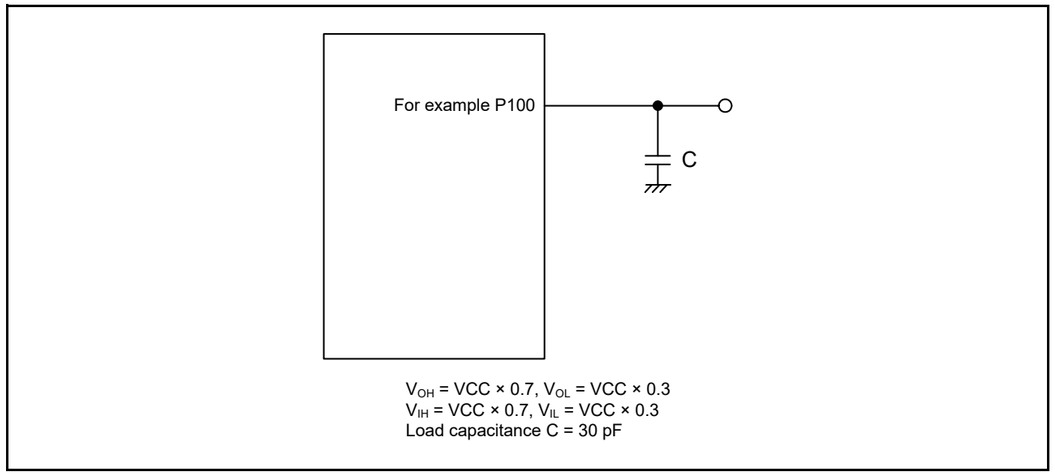

Figure 2.1 Input or output timing measurement conditions

The recommended measurement conditions for the timing specification of each peripheral provided are for the best peripheral operation. Make sure to adjust the driving abilities of each pin to meet your conditions.

Each function pin used for the same function must select the same drive ability. If the I/O drive ability of each function pin is mixed, the AC specification of each function is not guaranteed.

2. 电气特性

除非另有规定，MCU的电气特性在以下条件下定义：

VCC*1=AVCC0=VCC_USB*2=VCC_USB_LDO*2=1.6to5.5V VREFH=VREFH0=1.6toAVCC0 VBATT=1.6to3.6V VSS=AVSS0=VREFL=VREFL0=VSS_USB=0V Ta=T操作

注1.典型条件设置为VCC=3.3V。
注2.不使用USBFS时。

图2.1显示了时序条件。

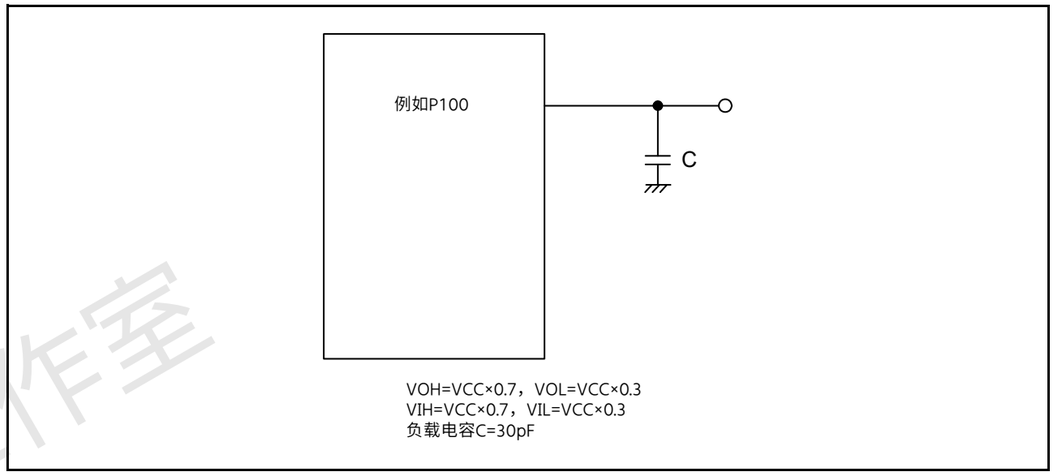

Figure 2.1 输入或输出定时测量条件

所提供的每个外设时序规范的推荐测量条件是为了实现最佳外设操作。确保调整每个引脚的驱动能力以满足您的条件。

用于相同功能的每个功能引脚必须选择相同的驱动能力。如果各功能管脚的IO驱动能力混用，则无法保证各功能的AC规格。

RA生态工作室

2.1 Absolute Maximum Ratings

Table 2.1 Absolute maximum ratings

Parameter		Symbol	Value	Unit
Power supply voltage		VCC	-0.5 to +6.5	V
Input voltage	5 V-tolerant ports*1	V_{in}	-0.3 to +6.5	V
	P000 to P008, P010 to P015	V_{in}	-0.3 to AVCC0 + 0.3	V
	Others	V_{in}	-0.3 to VCC + 0.3	V
Reference power supply voltage		VREFH0	-0.3 to +6.5	V
		VREFH		V
VBATT power supply voltage		VBATT	-0.5 to +6.5	V
Analog power supply voltage		AVCC0	-0.5 to +6.5	V
USB power supply voltage		VCC_USB	-0.5 to +6.5	V
		VCC_USB_LDO	-0.5 to +6.5	V
Analog input voltage	When AN000 to AN014 are used	V_{AN}	-0.3 to AVCC0 + 0.3	V
	When AN016 to AN025 are used		-0.3 to VCC + 0.3	V
LCD voltage	VL1 voltage	V_{L1}	-0.3 to +2.8	V
	VL2 voltage	V_{L2}	-0.3 to +6.5	V
	VL3 voltage	V_{L3}	-0.3 to +6.5	V
	VL4 voltage	V_{L4}	-0.3 to +6.5	V
Operating temperature*2,*3,*4		T_{opr}	-40 to +105	°C
			-40 to +85	
Storage temperature		T_{stg}	-55 to +125	°C

Caution: Permanent damage to the MCU may result if absolute maximum ratings are exceeded.
To preclude any malfunctions due to noise interference, insert capacitors of high frequency characteristics between the VCC and VSS pins, between the AVCC0 and AVSS0 pins, between the VCC_USB and VSS_USB pins, between the VREFH0 and VREFL0 pins, and between the VREFH and VREFL pins. Place capacitors of about 0.1 µF as close as possible to every power supply pin and use the shortest and heaviest possible traces. Also, connect capacitors as stabilization capacitance.
Connect the VCL pin to a VSS pin by a 4.7 µF capacitor. The capacitor must be placed close to the pin.
Do not input signals or an I/O pull-up power supply while the device is not powered. The current injection that results from input of such a signal or I/O pull-up might cause malfunction and the abnormal current that passes in the device at this time might cause degradation of internal elements.

Note 1. Ports P205, P206, P400 to P404, P407, P408 are 5 V tolerant.
Note 2. See section 2.2.1, Tj/Ta Definition.
Note 3. Contact a Renesas Electronics sales office for information on derating operation under T_a = +85°C to +105°C. Derating is the systematic reduction of load for improved reliability.
Note 4. The upper limit of operating temperature is +85°C or +105°C, depending on the product. For details, see section 1.3, Part Numbering.

2.1 绝对最大额定值

Table 2.1 绝对最大额定值

Parameter		Symbol	Value	Unit
电源电压		VCC	-0.5 to +6.5	V
输入电压	5 V-tolerant ports*1	V_{in}	-0.3 to +6.5	V
	P000 to P008, P010 to P015	V_{in}	-0.3 to AVCC0 + 0.3	V
	Others	V_{in}	-0.3 to VCC + 0.3	V
参考电源电压		VREFH0	-0.3 to +6.5	V
		VREFH		V
VBATT电源电压		VBATT	-0.5 to +6.5	V
模拟电源电压		AVCC0	-0.5 to +6.5	V
USB电源电压		VCC_USB	-0.5 to +6.5	V
		VCC_USB_LDO	-0.5 to +6.5	V
模拟输入电压	使用AN000至AN014时	V_{AN}	-0.3 to AVCC0 + 0.3	V
	使用AN016至AN025时		-0.3 to VCC + 0.3	V
LCD voltage	VL1 voltage	V_{L1}	-0.3 to +2.8	V
	VL2 voltage	V_{L2}	-0.3 to +6.5	V
	VL3 voltage	V_{L3}	-0.3 to +6.5	V
	VL4 voltage	V_{L4}	-0.3 to +6.5	V
Operating temperature*2,*3,*4		T_{opr}	-40 to +105	°C
			-40 to +85	
贮存温度		T_{stg}	-55 to +125	°C

Caution: 如果超过绝对最大额定值，可能会对MCU造成永久性损坏。
为避免因噪声干扰导致的任何故障，请在VCC和VSS引脚之间、AVCC0和AVSS0引脚之间、VCC_USB和VSS_USB引脚之间、VREFH0和VREFL0引脚之间以及VREFH和VREFL引脚之间插入具有高频特性的电容器.将大约0.1µF的电容器尽可能靠近每个电源引脚放置，并使用尽可能短和最重的走线。此外，连接电容器作为稳定电容。通过一个4.7µF电容将VCL引脚连接到VSS引脚。电容必须靠近引脚放置。

请勿在设备未通电时输入信号或IO上拉电源。输入此类信号或IO上拉导致的电流注入可能会导致故障，此时通过设备的异常电流可能会导致内部元件劣化。

Note 1. 端口P205、P206、P400至P404、P407、P408可承受5V电压。
Note 2. 请参见第2.2.1节，TjTa定义。
Note 3. 有关在Ta=+85°C至+105°C下降额运行的信息，请联系瑞萨电子销售办事处。降额是系统地减少负载以提高可靠性。
Note 4. 工作温度上限为+85°C或+105°C，具体取决于产品。有关详细信息，请参阅第1.3节，部分Numbering.

Table 2.2 Recommended operating conditions

Parameter	Symbol	Value	Min	Typ	Max	Unit
Power supply voltages	VCC*1, *2	When USBFS is not used	1.6	-	5.5	V
		When USBFS is used USB Regulator Disable	VCC_USB	-	3.6	V
		When USBFS is used USB Regulator Enable	VCC_USB _LDO	-	5.5	V
	VSS		-	0	-	V
USB power supply voltages	VCC_USB	When USBFS is not used	-	VCC	-	V
		When USBFS is used USB Regulator Disable (Input)	3.0	3.3	3.6	V
	VCC_USB_LDO	When USBFS is not used	-	VCC	-	V
		When USBFS is used USB Regulator Disable	-	VCC	-	V
		When USBFS is used USB Regulator Enable	3.8	-	5.5	V
	VSS_USB		-	0	-	V
VBATT power supply voltage	VBATT	When the battery backup function is not used	-	VCC	-	V
		When the battery backup function is used	1.6	-	3.6	V
Analog power supply voltages	AVCC0*1, *2		1.6	-	5.5	V
	AVSS0		-	0	-	V
	VREFH0	When used as ADC14 Reference	1.6	-	AVCC0	V
	VREFL0		-	0	-	V
	VREFH	When used as DAC12 Reference	1.6	-	AVCC0	V
	VREFL		-	0	-	V

Note 1. Use AVCC0 and VCC under the following conditions:
AVCC0 and VCC can be set individually within the operating range when VCC ≥ 2.2 V and AVCC0 ≥ 2.2 V.
AVCC0 = VCC when VCC < 2.2 V or AVCC0 < 2.2 V.

Note 2. When powering on the VCC and AVCC0 pins, power them on at the same time, or power the VCC pin first and then the AVCC0 pin.

Table 2.2 推荐工作条件

Parameter	Symbol	Value	Min	Typ	Max	Unit
电源电压	VCC*1, *2	不使用USBFS时	1.6	-	5.5	V
		使用USBFS时 USB稳压器 Disable	VCC_USB	-	3.6	V
		使用USBFS时 USB稳压器 Enable	VCC_USB _LDO	-	5.5	V
	VSS		-	0	-	V
USB电源电压	VCC_USB	不使用USBFS时	-	VCC	-	V
		使用USBFS时 USB稳压器 Disable (Input)	3.0	3.3	3.6	V
	VCC_USB_LDO	不使用USBFS时	-	VCC	-	V
		使用USBFS时 USB稳压器 Disable	-	VCC	-	V
		使用USBFS时 USB稳压器 Enable	3.8	-	5.5	V
	VSS_USB		-	0	-	V
VBATT电源电压	VBATT	不使用电池备份功能时	-	VCC	-	V
		使用电池备份功能时	1.6	-	3.6	V
模拟电源电压	AVCC0*1, *2		1.6	-	5.5	V
	AVSS0		-	0	-	V
	VREFH0	当用作 ADC14 Reference	1.6	-	AVCC0	V
	VREFL0		-	0	-	V
	VREFH	当用作 DAC12 Reference	1.6	-	AVCC0	V
	VREFL		-	0	-	V

Note 1. 在以下条件下使用AVCC0和VCC：当VCC≥2.2V和AVCC0≥2.2V时，AVCC0和VCC可以在工作范围内单独设置。
当VCC<2.2V或AVCC0<2.2V时，AVCC0=VCC。

Note 2. VCC和AVCC0引脚上电时，同时上电，或者先给VCC上电，再给AVCC0上电。

RA生态工作室

2.2 DC Characteristics

2.2.1 Tj/T_a Definition

Table 2.3 DC Characteristics

Conditions: Products with operating temperature (T_a) -40 to +105°C

Parameter	Symbol	Typ	Max	Unit	Test conditions
Permissible junction temperature	Tj	-	125	°C	High-speed mode
			105*1		Middle-speed mode Low-voltage mode Low-speed mode Subosc-speed mode

Note: Make sure that Tj = T_a + θja × total power consumption (W),
where total power consumption = (VCC - V_{OH}) × ΣI_{OH} + V_{OL} × ΣI_{OL} + I_{CC}max × VCC.

Note 1. The upper limit of operating temperature is +85°C or +105°C, depending on the product. For details, see section 1.3, Part Numbering. If the part number shows the operation temperature at 85°C, then the maximum value of T_j is +105°C, otherwise, it is +125°C.

2.2.2 I/O V_{IH}, V_{IL}

Table 2.4 I/O V_{IH}, V_{IL} (1)

Conditions: VCC = AVCC0 = VCC_USB = VCC_USB_LDO = 2.7 to 5.5V, VBATT = 1.6 to 3.6 V, VSS = AVSS0 = 0 V

Parameter		Symbol	Min	Typ	Max	Unit	Test conditions
Schmitt trigger input voltage	IIC*1 (except for SMBus)	V_{IH}	VCC × 0.7	-	5.8	V	-
		V_{IL}	-	-	VCC × 0.3		
		ΔV_T	VCC × 0.05	-	-		
	RES, NMI Other peripheral input pins excluding IIC	V_{IH}	VCC × 0.8	-	-		
		V_{IL}	-	-	VCC × 0.2		
		ΔV_T	VCC × 0.1	-	-		
Input voltage (except for Schmitt trigger input pin)	IIC (SMBus)*2	V_{IH}	2.2	-	-		VCC = 3.6 to 5.5 V
		V_{IH}	2.0	-	-		VCC = 2.7 to 3.6 V
		V_{IL}	-	-	0.8		-
	5 V-tolerant ports*3	V_{IH}	VCC × 0.8	-	5.8		
		V_{IL}	-	-	VCC × 0.2		
	P914, P915	V_{IH}	VCC_USB × 0.8	-	VCC_USB + 0.3		
		V_{IL}	-	-	VCC_USB × 0.2		
	P000 to P008, P010 to P015	V_{IH}	AVCC0 × 0.8	-	-		
		V_{IL}	-	-	AVCC0 × 0.2		
	EXTAL Input ports pins except for P000 to P008, P010 to P015, P914, P915	V_{IH}	VCC × 0.8	-	-		
		V_{IL}	-	-	VCC × 0.2		
When V_{BATT} power supply is selected	P402, P403, P404	V_{IH}	V_{BATT} × 0.8	-	V_{BATT} + 0.3		
		V_{IL}	-	-	V_{BATT} × 0.2		
		ΔV_T	V_{BATT} × 0.05	-	-		

Note 1. P205, P206, P400, P401, P407, P408 (total 6 pins).
Note 2. P100, P101, P204, P205, P206, P400, P401, P407, P408 (total 9 pins).
Note 3. P205, P206, P400 to P404, P407, P408 (total 9 pins).

2.2 DC Characteristics

2.2.1 Tj/T_a Definition

Table 2.3 DC Characteristics

条件：工作温度(Ta)-40至+105℃的产品

Parameter	Symbol	Typ	Max	Unit	测试条件
允许结温	Tj	-	125	°C	High-speed mode
			105*1		Middle-speed mode Low-voltage mode Low-speed mode Subosc-speed mode

Note: 确保Tj=Ta+θja×总功耗(W)，其中总功耗=(VCCVOH)×ΣIOH+VOL×ΣIOL+ICCmax×VCC
。

Note 1. 工作温度上限为+85°C或+105°C，具体取决于产品。有关详细信息，请参阅第1.3节，部分编号。如果零件编号显示工作温度为85°C，则Tj的最大值为+105°C，否则为+125°C。

2.2.2 I O V I H

Table 2.4 IOVIH VIL(1)

Conditions: VCC = AVCC0 = VCC_USB = VCC_USB_LDO = 2.7 to 5.5V, VBATT = 1.6 to 3.6 V, VSS = AVSS0 = 0 V

Parameter		Symbol	Min	Typ	Max	Unit	测试条件
施密特触发器输入电压	IIC*1 (except for SMBus)	V_{IH}	VCC × 0.7	-	5.8	V	-
		V_{IL}	-	-	VCC × 0.3		
		ΔV_T	VCC × 0.05	-	-		
	RES, NMI 除IIC外的其他外设输入引脚	V_{IH}	VCC × 0.8	-	-		
		V_{IL}	-	-	VCC × 0.2		
		ΔV_T	VCC × 0.1	-	-		
输入电压（施密特触发器输入引脚除外）	IIC (SMBus)*2	V_{IH}	2.2	-	-		VCC = 3.6 to 5.5 V
		V_{IH}	2.0	-	-		VCC = 2.7 to 3.6 V
		V_{IL}	-	-	0.8		-
	5 V-tolerant ports*3	V_{IH}	VCC × 0.8	-	5.8		
		V_{IL}	-	-	VCC × 0.2		
	P914, P915	V_{IH}	VCC_USB × 0.8	-	VCC_USB + 0.3		
		V_{IL}	-	-	VCC_USB × 0.2		
	P000 to P008, P010 to P015	V_{IH}	AVCC0 × 0.8	-	-		
		V_{IL}	-	-	AVCC0 × 0.2		
	EXTAL 输入端口引脚除了 P000 to P008, P010 to P015, P914, P915	V_{IH}	VCC × 0.8	-	-		
		V_{IL}	-	-	VCC × 0.2		
选择VBATT电源时	P402, P403, P404	V_{IH}	V_{BATT} × 0.8	-	V_{BATT} + 0.3		
		V_{IL}	-	-	V_{BATT} × 0.2		
		ΔV_T	V_{BATT} × 0.05	-	-		

Note 1. P205, P206, P400, P401, P407, P408 (total 6 pins).
Note 2. P100, P101, P204, P205, P206, P400, P401, P407, P408 (total 9 pins).
Note 3. P205, P206, P400 to P404, P407, P408 (total 9 pins).

RA生态工作室

Table 2.5 I/O V_{IH}, V_{IL} (2)

Conditions: VCC = AVCC0 = VCC_USB = VCC_USB_LDO = 1.6 to 2.7 V, VBATT = 1.6 to 3.6 V, VSS = AVSS0 = 0 V

Parameter		Symbol	Min	Typ	Max	Unit	Test conditions
Schmitt trigger input voltage	RES, NMI Peripheral input pins	V_{IH}	VCC × 0.8	-	-	V	-
		V_{IL}	-	-	VCC × 0.2		
		ΔV_T	VCC × 0.01	-	-		
Input voltage (except for Schmitt trigger input pin)	5 V-tolerant ports*1	V_{IH}	VCC × 0.8	-	5.8		
		V_{IL}	-	-	VCC × 0.2		
	P914, P915	V_{IH}	VCC_USB × 0.8	-	VCC_USB + 0.3		
		V_{IL}	-	-	VCC_USB × 0.2		
	P000 to P008, P010 to P015	V_{IH}	AVCC0 × 0.8	-	-		
		V_{IL}	-	-	AVCC0 × 0.2		
	EXTAL Input ports pins except for P000 to P008, P010 to P015, P914, P915	V_{IH}	VCC × 0.8	-	-		
		V_{IL}	-	-	VCC × 0.2		
When V_{BATT} power supply is selected	P402, P403, P404	V_{IH}	V_{BATT} × 0.8	-	V_{BATT} + 0.3		
		V_{IL}	-	-	V_{BATT} × 0.2		
		ΔV_T	V_{BATT} × 0.01	-	-		

Note 1. P205, P206, P400 to P404, P407, P408 (total 9 pins)

Table 2.5 IOVIH VIL(2)

Conditions: VCC = AVCC0 = VCC_USB = VCC_USB_LDO = 1.6 to 2.7 V, VBATT = 1.6 to 3.6 V, VSS = AVSS0 = 0 V

Parameter		Symbol	Min	Typ	Max	Unit	测试条件
施密特触发器输入电压	RES, NMI 外设输入引脚	V_{IH}	VCC × 0.8	-	-	V	-
		V_{IL}	-	-	VCC × 0.2		
		ΔV_T	VCC × 0.01	-	-		
输入电压（施密特触发器输入引脚除外）	5 V-tolerant ports*1	V_{IH}	VCC × 0.8	-	5.8		
		V_{IL}	-	-	VCC × 0.2		
	P914, P915	V_{IH}	VCC_USB × 0.8	-	VCC_USB + 0.3		
		V_{IL}	-	-	VCC_USB × 0.2		
	P000 to P008, P010 to P015	V_{IH}	AVCC0 × 0.8	-	-		
		V_{IL}	-	-	AVCC0 × 0.2		
	EXTAL 输入端口引脚除了 P000 to P008, P010 to P015, P914, P915	V_{IH}	VCC × 0.8	-	-		
		V_{IL}	-	-	VCC × 0.2		
选择VBATT电源时	P402, P403, P404	V_{IH}	V_{BATT} × 0.8	-	V_{BATT} + 0.3		
		V_{IL}	-	-	V_{BATT} × 0.2		
		ΔV_T	V_{BATT} × 0.01	-	-		

Note 1. P205, P206, P400 to P404, P407, P408 (total 9 pins)

RA生态工作室

2.2.3 I/O I_{OH}, I_{OL}

Table 2.6 I/O I_{OH}, I_{OL} (1 of 2)
Conditions: VCC = AVCC0 = VCC_USB = VCC_USB_LCO = 1.6 to 5.5 V

Parameter			Symbol	Min	Typ	Max	Unit
Permissible output current (average value per pin)	Ports P212, P213	-	I_{OH}	-	-	-4.0	mA
			I_{OL}	-	-	4.0	mA
	Port P408	Low drive*1	I_{OH}	-	-	-4.0	mA
			I_{OL}	-	-	4.0	mA
		Middle drive for IIC Fast-mode*4 VCC = 2.7 to 5.5 V	I_{OH}	-	-	-8.0	mA
			I_{OL}	-	-	8.0	mA
		Middle drive*2 VCC = 3.0 to 5.5 V	I_{OH}	-	-	-20.0	mA
			I_{OL}	-	-	20.0	mA
	Port P409	Low drive*1	I_{OH}	-	-	-4.0	mA
			I_{OL}	-	-	4.0	mA
		Middle drive*2 VCC = 2.7 to 3.0 V	I_{OH}	-	-	-8.0	mA
			I_{OL}	-	-	8.0	mA
		Middle drive*2 VCC = 3.0 to 5.5 V	I_{OH}	-	-	-20.0	mA
			I_{OL}	-	-	20.0	mA
	Ports P100 to P115, P201 to P204, P300 to P307, P500 to P503, P600 to P603, P608 to P610, P808, P809 (total 41 pins)	Low drive*1	I_{OH}	-	-	-4.0	mA
			I_{OL}	-	-	4.0	mA
		Middle drive*2	I_{OH}	-	-	-4.0	mA
			I_{OL}	-	-	8.0	mA
	Ports P914, P915	-	I_{OH}	-	-	-4.0	mA
			I_{OL}	-	-	4.0	mA
	Other output pin*3	Low drive*1	I_{OH}	-	-	-4.0	mA
			I_{OL}	-	-	4.0	mA
		Middle drive*2	I_{OH}	-	-	-8.0	mA
			I_{OL}	-	-	8.0	mA

2.2.3 我爱我哦

Table 2.6 IOIOH IOL(1of2)
Conditions: VCC = AVCC0 = VCC_USB = VCC_USB_LCO = 1.6 to 5.5 V

Parameter			Symbol	Min	Typ	Max	Unit
允许输出电流（每个引脚的平均值）	Ports P212, P213	-	I_{OH}	-	-	-4.0	mA
			I_{OL}	-	-	4.0	mA
	Port P408	Low drive*1	I_{OH}	-	-	-4.0	mA
			I_{OL}	-	-	4.0	mA
		IIC快速模式的中间驱动器*4 VCC = 2.7 to 5.5 V	I_{OH}	-	-	-8.0	mA
			I_{OL}	-	-	8.0	mA
		Middle drive*2 VCC = 3.0 to 5.5 V	I_{OH}	-	-	-20.0	mA
			I_{OL}	-	-	20.0	mA
	Port P409	低驱*1	I_{OH}	-	-	-4.0	mA
			I_{OL}	-	-	4.0	mA
		中驱*2 VCC = 2.7 to 3.0 V	I_{OH}	-	-	-8.0	mA
			I_{OL}	-	-	8.0	mA
		中驱*2 VCC = 3.0 to 5.5 V	I_{OH}	-	-	-20.0	mA
			I_{OL}	-	-	20.0	mA
	端口P100至P115，P201 to P204, P300 to P307, P500 to P503, P600 to P603, P608 to P610, P808, P809 (total 41 pins)	低驱*1	I_{OH}	-	-	-4.0	mA
			I_{OL}	-	-	4.0	mA
		中驱*2	I_{OH}	-	-	-4.0	mA
			I_{OL}	-	-	8.0	mA
	Ports P914, P915	-	I_{OH}	-	-	-4.0	mA
			I_{OL}	-	-	4.0	mA
	其他输出引脚*3	低驱*1	I_{OH}	-	-	-4.0	mA
			I_{OL}	-	-	4.0	mA
		中驱*2	I_{OH}	-	-	-8.0	mA
			I_{OL}	-	-	8.0	mA

RA生态工作室

Table 2.6 I/O I_{OH}, I_{OL} (2 of 2)

Conditions: VCC = AVCC0 = VCC_USB = VCC_USB_LCO = 1.6 to 5.5 V

Parameter			Symbol	Min	Typ	Max	Unit
Permissible output current (Max value per pin)	Ports P212, P213	-	I_{OH}	-	-	-4.0	mA
			I_{OL}	-	-	4.0	mA
	Port P408	Low drive*1	I_{OH}	-	-	-4.0	mA
			I_{OL}	-	-	4.0	mA
		Middle drive for IIC Fast-mode*4 VCC = 2.7 to 5.5 V	I_{OH}	-	-	-8.0	mA
			I_{OL}	-	-	8.0	mA
		Middle drive*2 VCC = 3.0 to 5.5 V	I_{OH}	-	-	-20.0	mA
			I_{OL}	-	-	20.0	mA
	Port P409	Low drive*1	I_{OH}	-	-	-4.0	mA
			I_{OL}	-	-	4.0	mA
		Middle drive*2 VCC = 2.7 to 3.0 V	I_{OH}	-	-	-8.0	mA
			I_{OL}	-	-	8.0	mA
		Middle drive*2 VCC = 3.0 to 5.5 V	I_{OH}	-	-	-20.0	mA
			I_{OL}	-	-	20.0	mA
	Ports P100 to P115, P201 to P204, P300 to P307, P500 to P503, P600 to P603, P608 to P610, P808, P809 (total 41 pins)	Low drive*1	I_{OH}	-	-	-4.0	mA
			I_{OL}	-	-	4.0	mA
		Middle drive*2	I_{OH}	-	-	-4.0	mA
			I_{OL}	-	-	8.0	mA
	Ports P914, P915	-	I_{OH}	-	-	-4.0	mA
			I_{OL}	-	-	4.0	mA
	Other output pin*3	Low drive*1	I_{OH}	-	-	-4.0	mA
			I_{OL}	-	-	4.0	mA
		Middle drive*2	I_{OH}	-	-	-8.0	mA
			I_{OL}	-	-	8.0	mA
Permissible output current (max value total pins)	Total of ports P000 to P008, P010 to P015		$\Sigma I_{OH\ (max)}$	-	-	-30	mA
			$\Sigma I_{OL\ (max)}$	-	-	30	mA
	Ports P914, P915		$\Sigma I_{OH\ (max)}$	-	-	-2.0	mA
			$\Sigma I_{OL\ (min)}$	-	-	2.0	mA
	Total of all output pin*5		$\Sigma I_{OH\ (max)}$	-	-	-60	mA
			$\Sigma I_{OL\ (max)}$	-	-	60	mA

Caution: To protect the reliability of the MCU, the output current values should not exceed the values in this table. The average output current indicates the average value of current measured during 100 μs.

Note 1. This is the value when low driving ability is selected with the Port Drive Capability bit in PmnPFS register.
Note 2. This is the value when middle driving ability is selected with the Port Drive Capability bit in PmnPFS register.
Note 3. Except for ports P200, P214, P215, which are input ports.
Note 4. This is the value when middle driving ability for IIC Fast-mode is selected with the Port Drive Capability bit in PmnPFS register.
Note 5. For details on the permissible output current used with CTSU, see section 2.11, CTSU Characteristics.

Table 2.6 IOIOH IOL(2/2)

Conditions: VCC = AVCC0 = VCC_USB = VCC_USB_LCO = 1.6 to 5.5 V

Parameter			Symbol	Min	Typ	Max	Unit
允许输出电流（每个引脚的最大值）	Ports P212, P213	-	I_{OH}	-	-	-4.0	mA
			I_{OL}	-	-	4.0	mA
	Port P408	Low drive*1	I_{OH}	-	-	-4.0	mA
			I_{OL}	-	-	4.0	mA
		IIC快速模式的中间驱动器*4 VCC = 2.7 to 5.5 V	I_{OH}	-	-	-8.0	mA
			I_{OL}	-	-	8.0	mA
		Middle drive*2 VCC = 3.0 to 5.5 V	I_{OH}	-	-	-20.0	mA
			I_{OL}	-	-	20.0	mA
	Port P409	低驱*1	I_{OH}	-	-	-4.0	mA
			I_{OL}	-	-	4.0	mA
		中驱*2 VCC = 2.7 to 3.0 V	I_{OH}	-	-	-8.0	mA
			I_{OL}	-	-	8.0	mA
		中驱*2 VCC = 3.0 to 5.5 V	I_{OH}	-	-	-20.0	mA
			I_{OL}	-	-	20.0	mA
	端口P100至P115，P201 to P204, P300 to P307, P500 to P503, P600 to P603, P608 to P610, P808, P809 (total 41 pins)	Low drive*1	I_{OH}	-	-	-4.0	mA
			I_{OL}	-	-	4.0	mA
		Middle drive*2	I_{OH}	-	-	-4.0	mA
			I_{OL}	-	-	8.0	mA
	Ports P914, P915	-	I_{OH}	-	-	-4.0	mA
			I_{OL}	-	-	4.0	mA
	其他输出引脚*3	Low drive*1	I_{OH}	-	-	-4.0	mA
			I_{OL}	-	-	4.0	mA
		Middle drive*2	I_{OH}	-	-	-8.0	mA
			I_{OL}	-	-	8.0	mA
允许输出电流（最大总引脚数）	P000至P008、P010至P015端口总数		$\Sigma I_{OH\ (max)}$	-	-	-30	mA
			$\Sigma I_{OL\ (max)}$	-	-	30	mA
	Ports P914, P915		$\Sigma I_{OH\ (max)}$	-	-	-2.0	mA
			$\Sigma I_{OL\ (min)}$	-	-	2.0	mA
	所有输出引脚的总数*5		$\Sigma I_{OH\ (max)}$	-	-	-60	mA
			$\Sigma I_{OL\ (max)}$	-	-	60	mA

Caution: 为保护单片机的可靠性，输出电流值不应超过此表中的值。平均输出电流是指在100μs内测得的电流平均值。

Note 1. 这是使用PmnPFS寄存器中的端口驱动能力位选择低驱动能力时的值。
Note 2. 这是使用PmnPFS寄存器中的端口驱动能力位选择中等驱动能力时的值。
Note 3. 端口P200、P214、P215除外，它们是输入端口。
Note 4. 这是使用PmnPFS寄存器中的端口驱动能力位选择IIC快速模式的中等驱动能力时的值。
Note 5. 有关与CTSU一起使用的允许输出电流的详细信息，请参阅第2.11节，CTSU特性。

生态工作室

2.2.4 I/O V_{OH}, V_{OL}, and Other Characteristics

Table 2.7 I/O V_{OH}, V_{OL} (1)

Conditions: VCC = AVCC0 = VCC_USB = VCC_USB_LCO = 4.0 to 5.5 V

Parameter			Symbol	Min	Typ	Max	Unit	Test conditions
Output voltage	IIC*1		V_{OL}	-	-	0.4	V	I_{OL} = 3.0 mA
			V_{OL}*2,*5	-	-	0.6		I_{OL} = 6.0 mA
	Ports P408, P409*2, *3		V_{OH}	VCC - 1.0	-	-		I_{OH} = -20 mA
			V_{OL}	-	-	1.0		I_{OL} = 20 mA
	Ports P000 to P008, P010 to P015	Low drive	V_{OH}	AVCC0 - 0.8	-	-		I_{OH} = -2.0 mA
			V_{OL}	-	-	0.8		I_{OL} = 2.0 mA
		Middle drive	V_{OH}	AVCC0 - 0.8	-	-		I_{OH} = -4.0 mA
			V_{OL}	-	-	0.8		I_{OL} = 4.0 mA
	Ports P914, P915		V_{OH}	VCC_USB - 0.8	-	-		I_{OH} = -2.0 mA
			V_{OL}	-	-	0.8		I_{OL} = 2.0 mA
	Other output pins*4	Low drive	V_{OH}	VCC - 0.8	-	-		I_{OH} = -2.0 mA
			V_{OL}	-	-	0.8		I_{OL} = 2.0 mA
		Middle drive*6	V_{OH}	VCC - 0.8	-	-		I_{OH} = -4.0 mA
			V_{OL}	-	-	0.8		I_{OL} = 4.0 mA

Note 1. P100, P101, P204, P205, P206, P400, P401, P407, P408 (total 9 pins).
Note 2. This is the value when middle driving ability is selected with the Port Drive Capability bit in PmnPFS register.
Note 3. Based on characterization data, not tested in production.
Note 4. Except for ports P200, P214, P215, which are input ports.
Note 5. This is the value when middle driving ability for IIC is selected in the Port Drive Capability bit in PmnPFS register for P408.
Note 6. Except for P212, P213.

Table 2.8 I/O V_{OH}, V_{OL} (2)

Conditions: VCC = AVCC0 = VCC_USB = VCC_USB_LCO = 2.7 to 4.0 V

Parameter			Symbol	Min	Typ	Max	Unit	Test conditions
Output voltage	IIC*1		V_{OL}	-	-	0.4	V	I_{OL} = 3.0 mA
			V_{OL}*2,*5	-	-	0.6		I_{OL} = 6.0 mA
	Ports P408, P409*2, *3		V_{OH}	VCC - 1.0	-	-		I_{OH} = -20 mA VCC = 3.3 V
			V_{OL}	-	-	1.0		I_{OL} = 20 mA VCC = 3.3 V
	Ports P000 to P008, P010 to P015	Low drive	V_{OH}	AVCC0 - 0.5	-	-		I_{OH} = -1.0 mA
			V_{OL}	-	-	0.5		I_{OL} = 1.0 mA
		Middle drive	V_{OH}	AVCC0 - 0.5	-	-		I_{OH} = -2.0 mA
			V_{OL}	-	-	0.5		I_{OL} = 2.0 mA
	Ports P914, P915		V_{OH}	VCC_USB - 0.5	-	-		I_{OH} = -1.0 mA
			V_{OL}	-	-	0.5		I_{OL} = 1.0 mA
	Other output pins*4	Low drive	V_{OH}	VCC - 0.5	-	-		I_{OH} = -1.0 mA
			V_{OL}	-	-	0.5		I_{OL} = 1.0 mA
		Middle drive*6	V_{OH}	VCC - 0.5	-	-		I_{OH} = -2.0 mA
			V_{OL}	-	-	0.5		I_{OL} = 2.0 mA

Note 1. P100, P101, P204, P205, P206, P400, P401, P407, P408 (total 9 pins).
Note 2. This is the value when middle driving ability is selected with the Port Drive Capability bit in PmnPFS register.
Note 3. Based on characterization data, not tested in production.
Note 4. Except for ports P200, P214, P215, which are input ports.
Note 5. This is the value when middle driving ability for IIC is selected in the Port Drive Capability bit in PmnPFS register for P408.
Note 6. Except for P212, P213.

2.2.4 IOVOH VOL和其他特性

Table 2.7 IOVOH VOL(1)

Conditions: VCC = AVCC0 = VCC_USB = VCC_USB_LCO = 4.0 to 5.5 V

Parameter			Symbol	Min	Typ	Max	Unit	测试条件
输出电压	IIC*1		V_{OL}	-	-	0.4	V	我OL=3.0毫安
			V_{OL}*2,*5	-	-	0.6		我OL=6.0毫安
	Ports P408, P409*2, *3		V_{OH}	VCC - 1.0	-	-		IOH=−20毫安
			V_{OL}	-	-	1.0		我OL=20毫安
	端口P000至P008，P010 to P015	低驱动	V_{OH}	AVCC0 - 0.8	-	-		IOH=−2.0毫安
			V_{OL}	-	-	0.8		我OL=2.0毫安
		中间驱动器	V_{OH}	AVCC0 - 0.8	-	-		IOH=−4.0毫安
			V_{OL}	-	-	0.8		我OL=4.0毫安
	Ports P914, P915		V_{OH}	VCC_USB - 0.8	-	-		IOH=−2.0毫安
			V_{OL}	-	-	0.8		我OL=2.0毫安
	其他输出引脚*4	低驱动	V_{OH}	VCC - 0.8	-	-		IOH=−2.0毫安
			V_{OL}	-	-	0.8		我OL=2.0毫安
		Middle drive*6	V_{OH}	VCC - 0.8	-	-		IOH=−4.0毫安
			V_{OL}	-	-	0.8		我OL=4.0毫安

Note 1. P100, P101, P204, P205, P206, P400, P401, P407, P408 (total 9 pins).
Note 2. 这是使用PmnPFS寄存器中的端口驱动能力位选择中等驱动能力时的值。
Note 3. 基于特性数据，未经生产测试。
Note 4. 端口P200、P214、P215除外，它们是输入端口。
Note 5. 这是在P408的PmnPFS寄存器的端口驱动能力位中选择IIC的中等驱动能力时的值。
Note 6. P212、P213除外。

Table 2.8 IOVOH VOL(2)

Conditions: VCC = AVCC0 = VCC_USB = VCC_USB_LCO = 2.7 to 4.0 V

Parameter			Symbol	Min	Typ	Max	Unit	测试条件
输出电压	IIC*1		V_{OL}	-	-	0.4	V	我OL=3.0毫安
			V_{OL}*2,*5	-	-	0.6		我OL=6.0毫安
	Ports P408, P409*2, *3		V_{OH}	VCC - 1.0	-	-		我OH=−20毫安VCC=3.3V
			V_{OL}	-	-	1.0		我OL=20毫安VCC=3.3V
	端口P000至P008，P010 to P015	低驱动	V_{OH}	AVCC0 - 0.5	-	-		IOH=−1.0毫安
			V_{OL}	-	-	0.5		我OL=1.0毫安
		中间驱动器	V_{OH}	AVCC0 - 0.5	-	-		IOH=−2.0毫安
			V_{OL}	-	-	0.5		我OL=2.0毫安
	Ports P914, P915		V_{OH}	VCC_USB - 0.5	-	-		IOH=−1.0毫安
			V_{OL}	-	-	0.5		我OL=1.0毫安
	其他输出引脚*4	低驱动	V_{OH}	VCC - 0.5	-	-		IOH=−1.0毫安
			V_{OL}	-	-	0.5		我OL=1.0毫安
		Middle drive*6	V_{OH}	VCC - 0.5	-	-		IOH=−2.0毫安
			V_{OL}	-	-	0.5		我OL=2.0毫安

Note 1. P100, P101, P204, P205, P206, P400, P401, P407, P408 (total 9 pins).
Note 2. 这是使用PmnPFS寄存器中的端口驱动能力位选择中等驱动能力时的值。
Note 3. 基于特性数据，未经生产测试。
Note 4. 端口P200、P214、P215除外，它们是输入端口。
Note 5. 这是在P408的PmnPFS寄存器的端口驱动能力位中选择IIC的中等驱动能力时的值。
Note 6. P212、P213除外。

瑞萨电子工作室 RA生态工作室

Table 2.9 I/O V_{OH}, V_{OL} (3)

Conditions: VCC = AVCC0 = VCC_USB = VCC_USB_LCO = 1.6 to 2.7 V

Parameter			Symbol	Min	Typ	Max	Unit	Test conditions
Output voltage	Ports P000 to P015	Low drive	V_{OH}	AVCC0 - 0.3	-	-	V	I_{OH} = -0.5 mA
			V_{OL}	-	-	0.3		I_{OL} = 0.5 mA
		Middle drive	V_{OH}	AVCC0 - 0.3	-	-		I_{OH} = -1.0 mA
			V_{OL}	-	-	0.3		I_{OL} = 1.0 mA
	Ports P914, P915		V_{OH}	VCC_USB - 0.3	-	-		I_{OH} = -0.5 mA
			V_{OL}	-	-	0.3		I_{OL} = 0.5 mA
	Other output pins*1	Low drive	V_{OH}	VCC - 0.3	-	-		I_{OH} = -0.5 mA
			V_{OL}	-	-	0.3		I_{OL} = 0.5 mA
		Middle drive*2	V_{OH}	VCC - 0.3	-	-		I_{OH} = -1.0 mA
			V_{OL}	-	-	0.3		I_{OL} = 1.0 mA

Note 1. Except for ports P200, P214, P215, which are input ports.
Note 2. Except for P212, P213.

Table 2.10 I/O other characteristics

Conditions: VCC = AVCC0 = 1.6 to 5.5 V

Parameter		Symbol	Min	Typ	Max	Unit	Test conditions
Input leakage current	RES, P200, P214, P215	$\lvert I_{in} \rvert$	-	-	1.0	μA	V_{in} = 0 V V_{in} = VCC
Three-state leakage current (off state)	5 V-tolerant ports	$\lvert I_{TSI} \rvert$	-	-	1.0	μA	V_{in} = 0 V V_{in} = 5.8 V
	Other ports (except for ports P200, P214, P215 and 5 V tolerant)		-	-	1.0		V_{in} = 0 V V_{in} = VCC
Input pull-up resistor	All ports (except for ports P200, P214, P215, P914, P915)	R_U	10	20	50	kΩ	V_{in} = 0 V
Input capacitance	P914, P915, P100 to P103, P111, P112, P200	C_{in}	-	-	30	pF	V_{in} = 0 V f = 1 MHz T_a = 25°C
	Other input pins		-	-	15		

Table 2.9 IOVOH VOL(3)

Conditions: VCC = AVCC0 = VCC_USB = VCC_USB_LCO = 1.6 to 2.7 V

Parameter			Symbol	Min	Typ	Max	Unit	测试条件
输出电压	端口P000至P015	低驱动	V_{OH}	AVCC0 - 0.3	-	-	V	IOH=−0.5毫安
			V_{OL}	-	-	0.3		我OL=0.5毫安
		中间驱动器	V_{OH}	AVCC0 - 0.3	-	-		IOH=−1.0毫安
			V_{OL}	-	-	0.3		我OL=1.0毫安
	Ports P914, P915		V_{OH}	VCC_USB - 0.3	-	-		IOH=−0.5毫安
			V_{OL}	-	-	0.3		我OL=0.5毫安
	其他输出引脚*1	低驱动	V_{OH}	VCC - 0.3	-	-		IOH=−0.5毫安
			V_{OL}	-	-	0.3		我OL=0.5毫安
		Middle drive*2	V_{OH}	VCC - 0.3	-	-		IOH=−1.0毫安
			V_{OL}	-	-	0.3		我OL=1.0毫安

Note 1. 端口P200、P214、P215除外，它们是输入端口。
Note 2. P212、P213除外。

Table 2.10 IO其他特征

Conditions: VCC = AVCC0 = 1.6 to 5.5 V

Parameter		Symbol	Min	Typ	Max	Unit	测试条件
输入漏电流	RES, P200, P214, P215	$\lvert I_{in} \rvert$	-	-	1.0	μA	V_{in} = 0 V V_{in} = VCC
三态漏电流（关闭状态）	5 V-tolerant ports	$\lvert I_{TSI} \rvert$	-	-	1.0	μA	V_{in} = 0 V V_{in} = 5.8 V
	其他端口（端口P200、P214、P215和5V容限除外）		-	-	1.0		V_{in} = 0 V V_{in} = VCC
输入上拉电阻	所有端口（端口P200、P214、P215、P914、P915除外）	R_U	10	20	50	kΩ	V_{in} = 0 V
输入电容	P914, P915, P100 to P103, P111, P112, P200	C_{in}	-	-	30	pF	V_{in} = 0 V f = 1 MHz T_a = 25°C
	其他输入引脚		-	-	15		

RA生态工作室

2.2.5 I/O Pin Output Characteristics of Low Drive Capacity

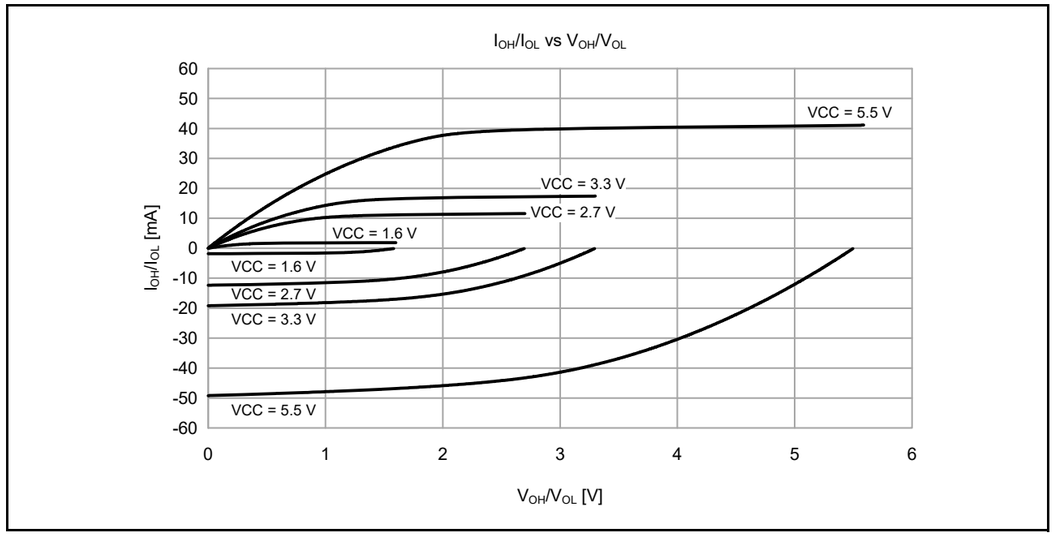

Figure 2.2 **V_{OH}/V_{OL} and I_{OH}/I_{OL} Voltage Characteristics at T_a = 25°C when low drive output is selected (reference data)**

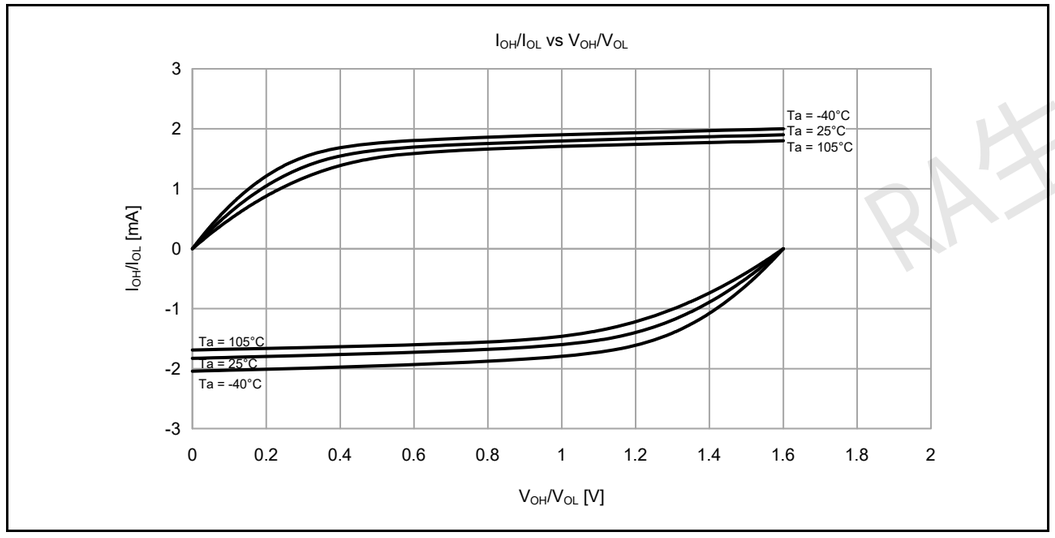

Figure 2.3 **V_{OH}/V_{OL} and I_{OH}/I_{OL} temperature characteristics at VCC = 1.6 V when low drive output is selected (reference data)**

2.2.5 低驱动能力的IO引脚输出特性

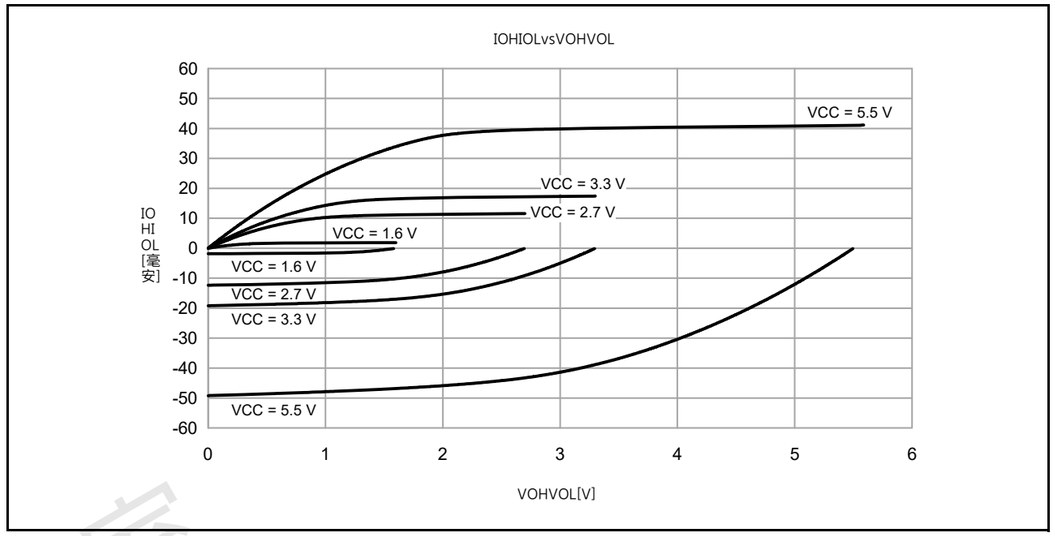

Figure 2.2 **选择低驱动输出时，Ta=25°C时的VOHVOL和IOHIOL电压特性（参考数据）**

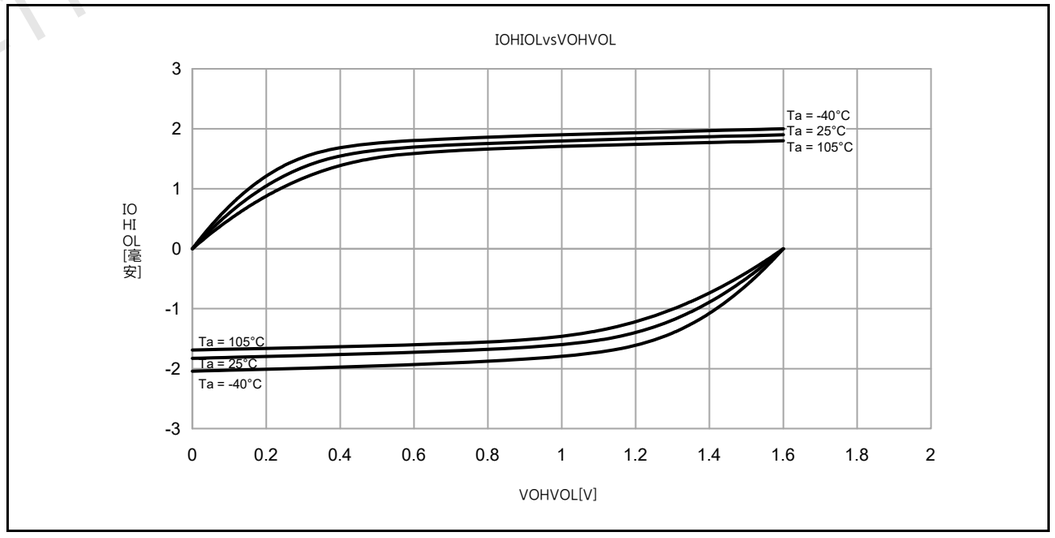

Figure 2.3 **选择低驱动输出时，VCC=1.6V时的VOHVOL和IOHIOL温度特性（参考数据）**

RA生态工作室

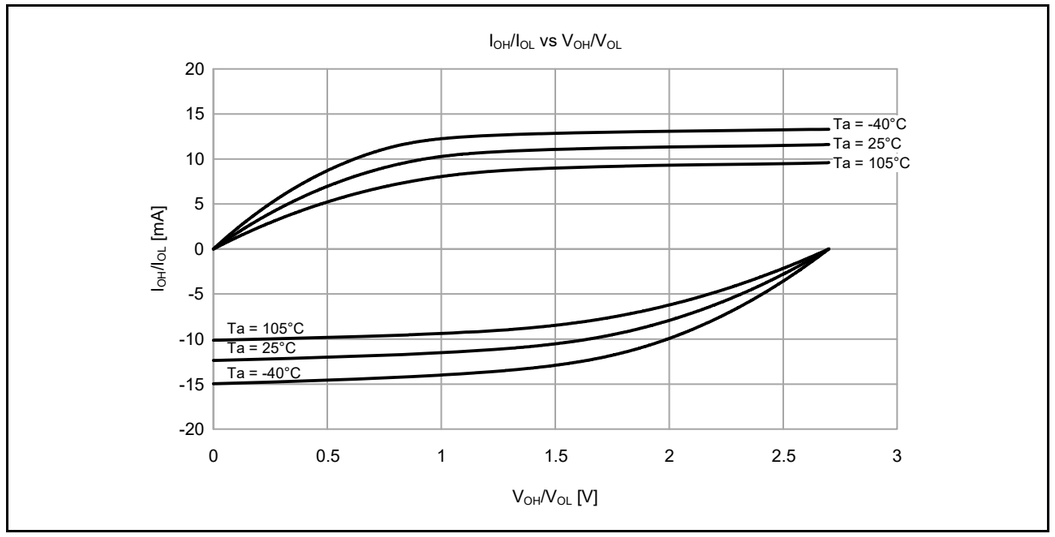

Figure 2.4 **V_{OH}/V_{OL} and I_{OH}/I_{OL} temperature characteristics at VCC = 2.7 V when low drive output is selected (reference data)**

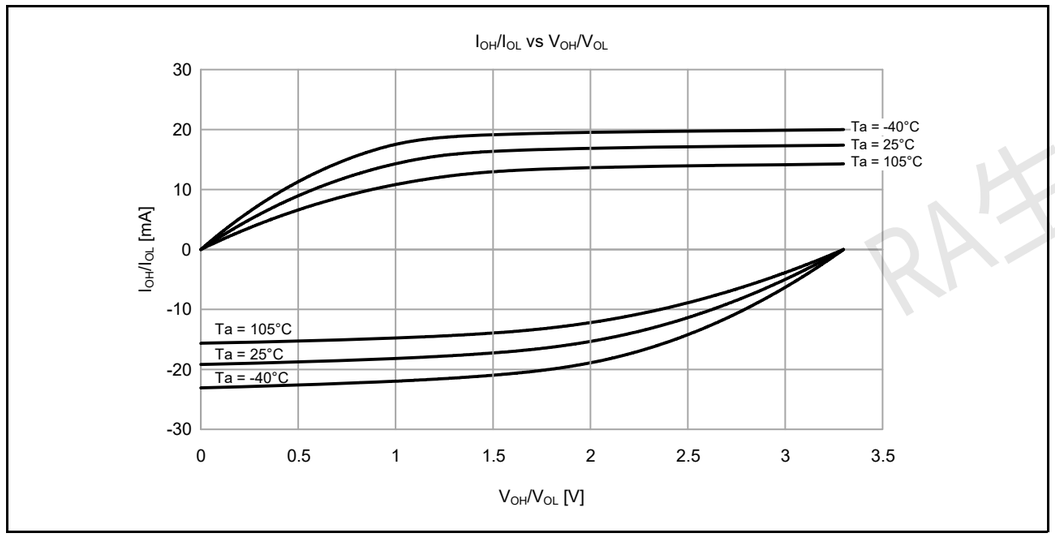

Figure 2.5 **V_{OH}/V_{OL} and I_{OH}/I_{OL} temperature characteristics at VCC = 3.3 V when low drive output is selected (reference data)**

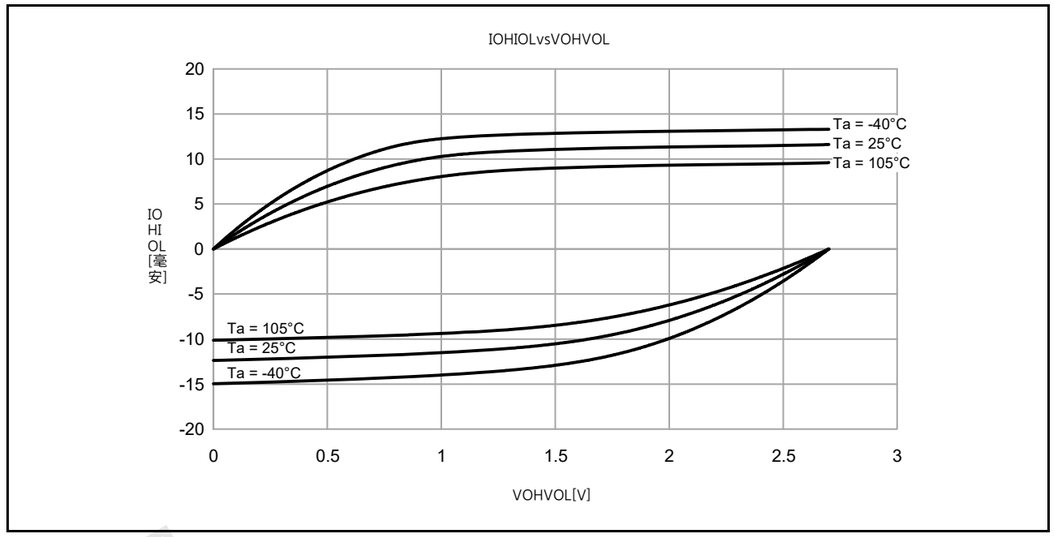

Figure 2.4 **选择低驱动输出时，VCC=2.7V时的VOHVOL和IOHIOL温度特性（参考数据）**

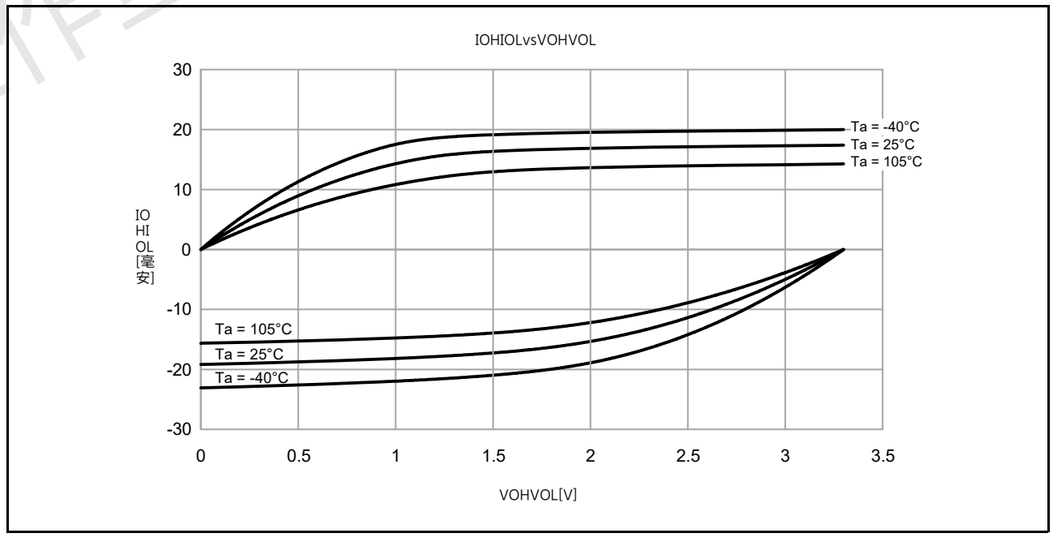

Figure 2.5 **选择低驱动输出时，VCC=3.3V时的VOHVOL和IOHIOL温度特性（参考数据）**

RA生态工作室

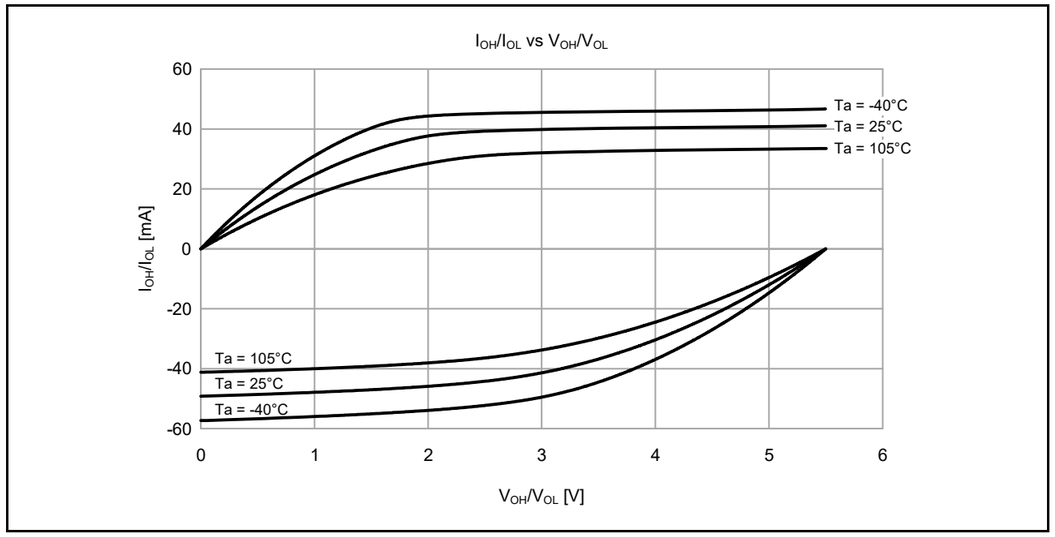

Figure 2.6 **V_{OH}/V_{OL} and I_{OH}/I_{OL} temperature characteristics at VCC = 5.5 V when low drive output is selected (reference data)**

2.2.6 I/O Pin Output Characteristics of Middle Drive Capacity

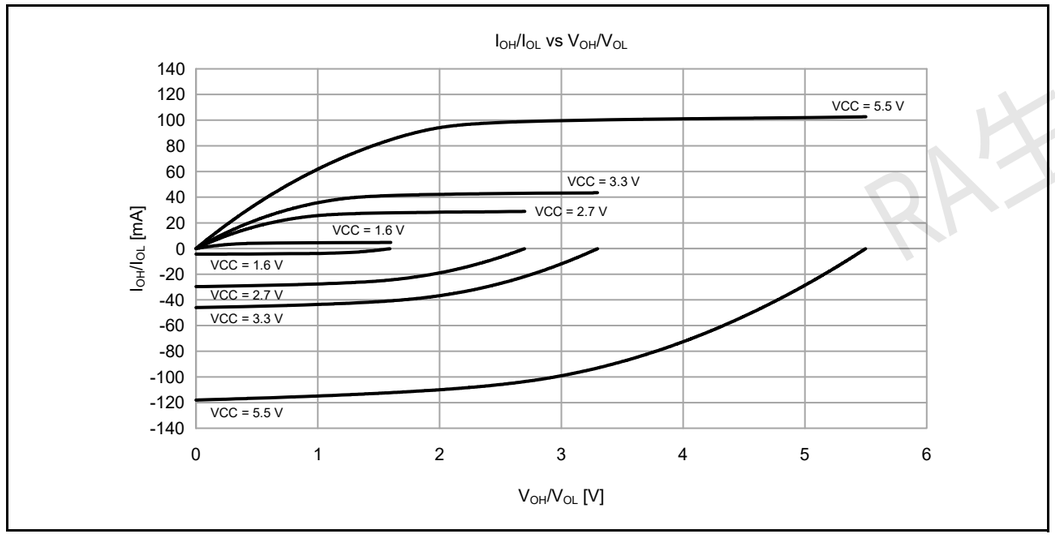

Figure 2.7 **V_{OH}/V_{OL} and I_{OH}/I_{OL} voltage characteristics at T_a = 25°C when middle drive output is selected (reference data)**

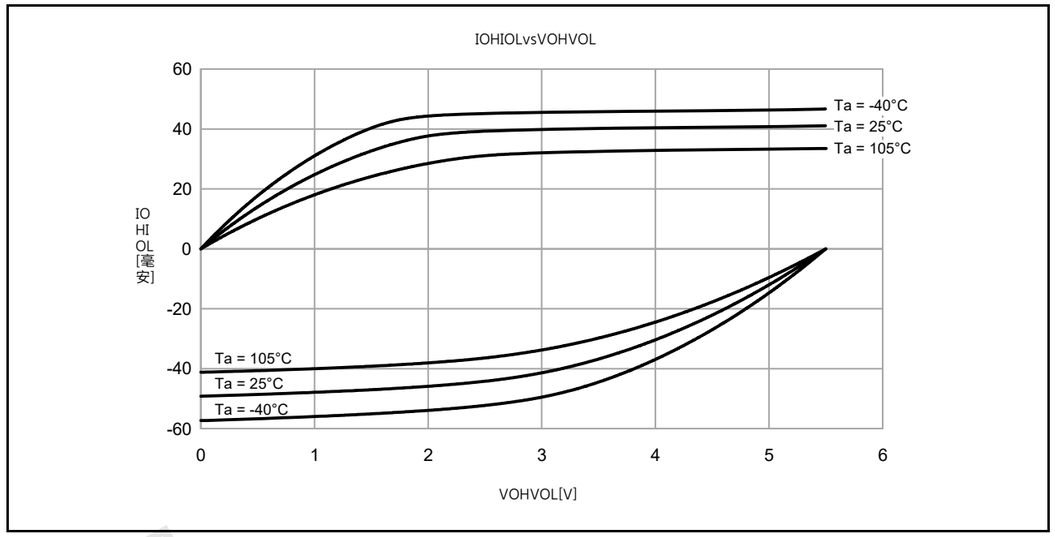

Figure 2.6 **选择低驱动输出时，VCC=5.5V时的VOHVOL和IOHIOL温度特性（参考数据）**

2.2.6 中等驱动容量的IOPin输出特性

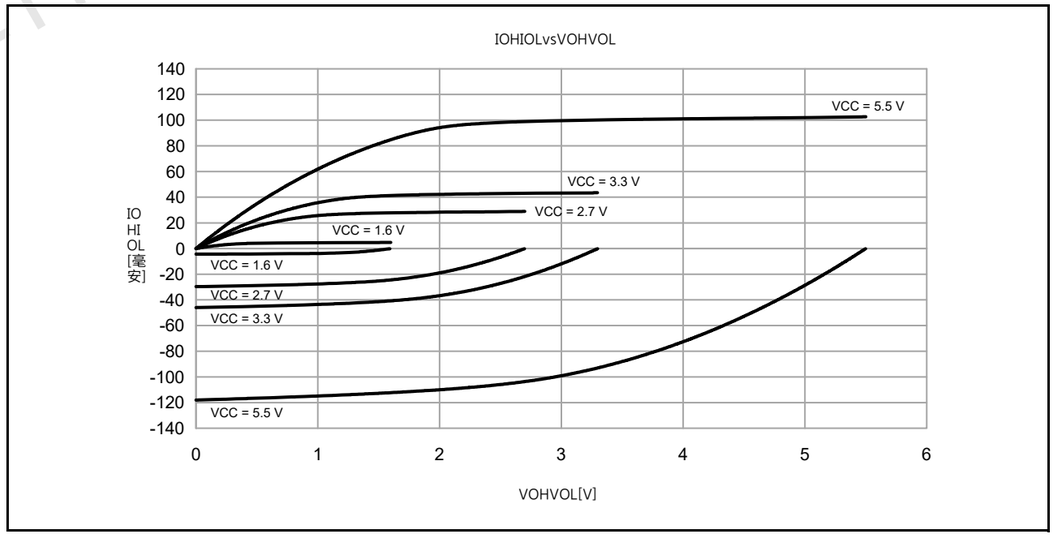

Figure 2.7 **选择中间驱动输出时，Ta=25°C时的VOHVOL和IOHIOL电压特性（参考数据）**

RA生态工作室

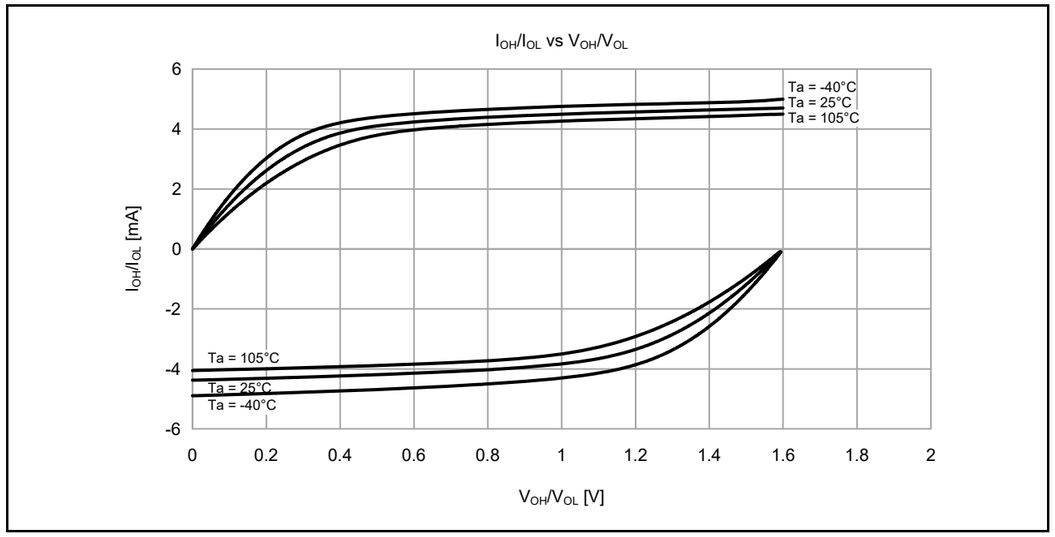

Figure 2.8 **V_{OH}/V_{OL} and I_{OH}/I_{OL} temperature characteristics at VCC = 1.6 V when middle drive output is selected (reference data)**

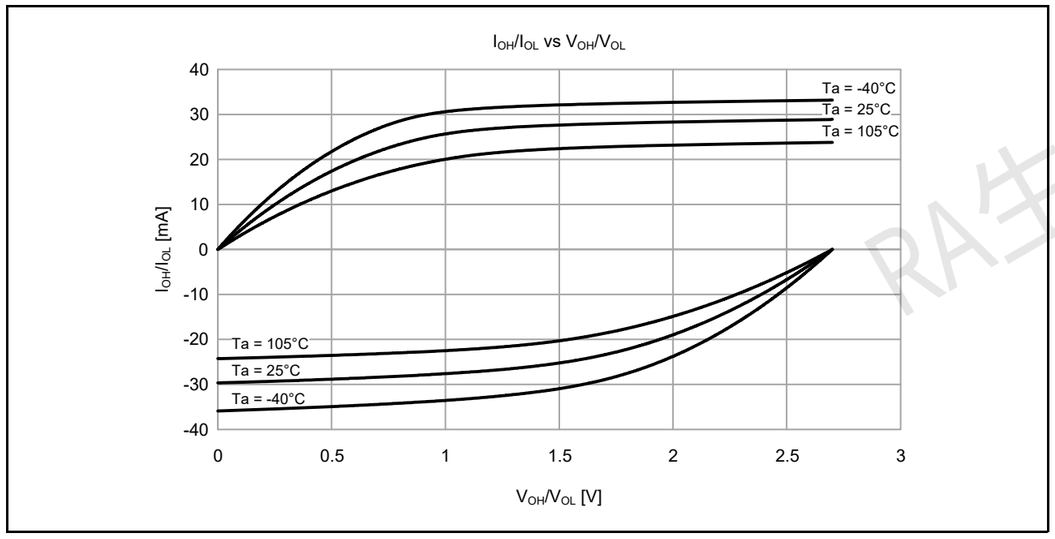

Figure 2.9 **V_{OH}/V_{OL} and I_{OH}/I_{OL} temperature characteristics at VCC = 2.7 V when middle drive output is selected (reference data)**

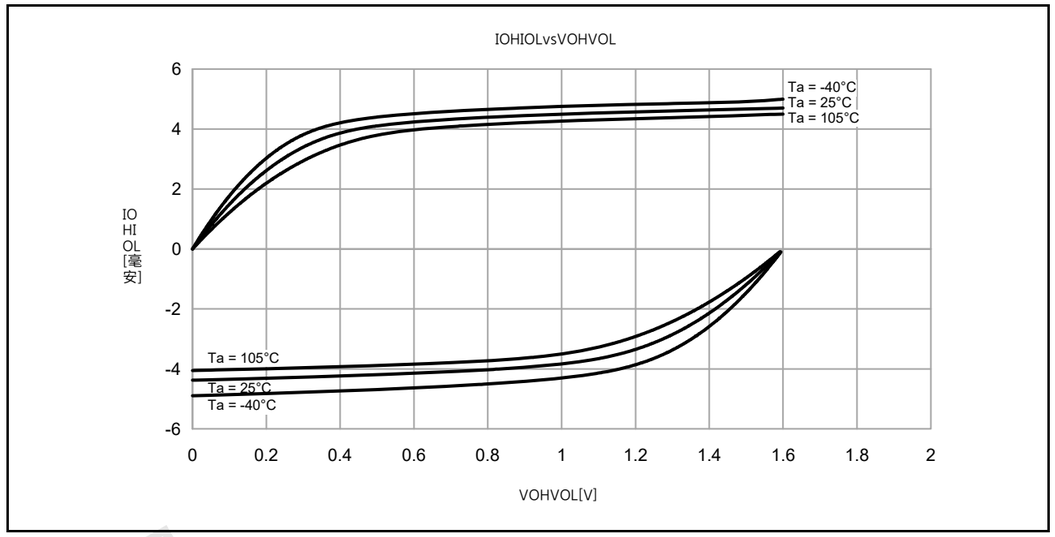

Figure 2.8 **选择中间驱动输出时，VCC=1.6V时的VOHVOL和IOHIOL温度特性（参考数据）**

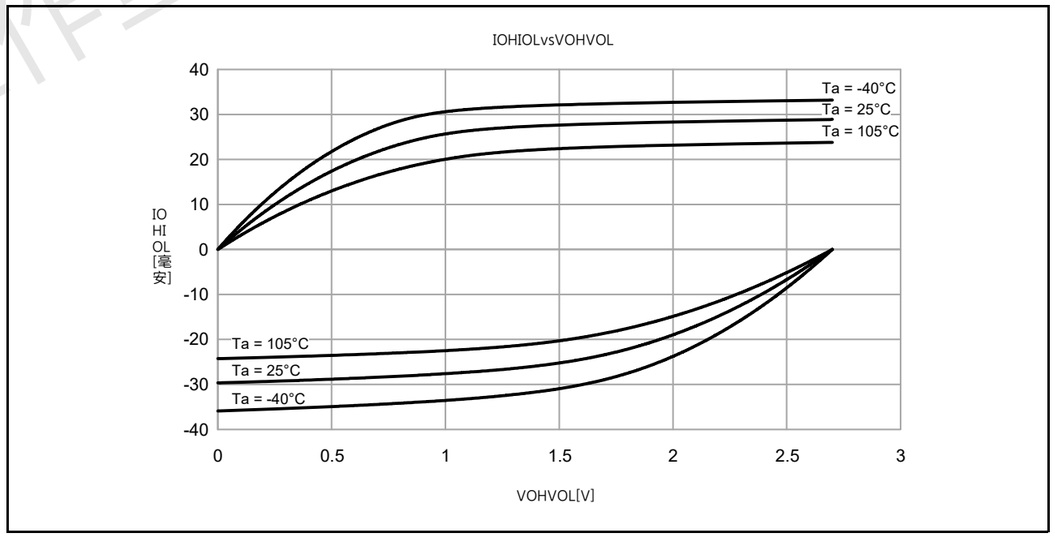

Figure 2.9 **选择中间驱动输出时，VCC=2.7V时的VOHVOL和IOHIOL温度特性（参考数据）**

RA生态工作室

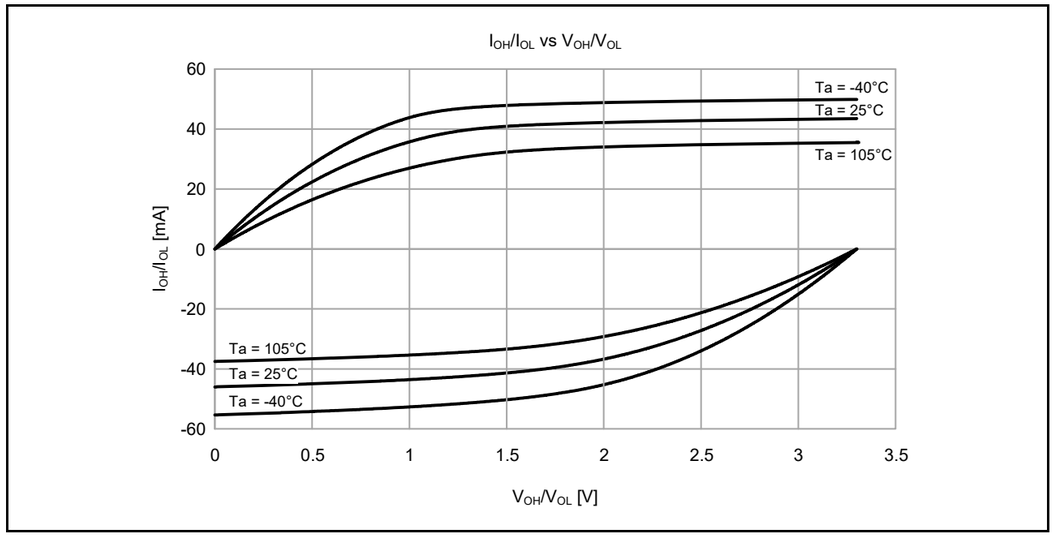

Figure 2.10 **V_{OH}/V_{OL} and I_{OH}/I_{OL} temperature characteristics at VCC = 3.3 V when middle drive output is selected (reference data)**

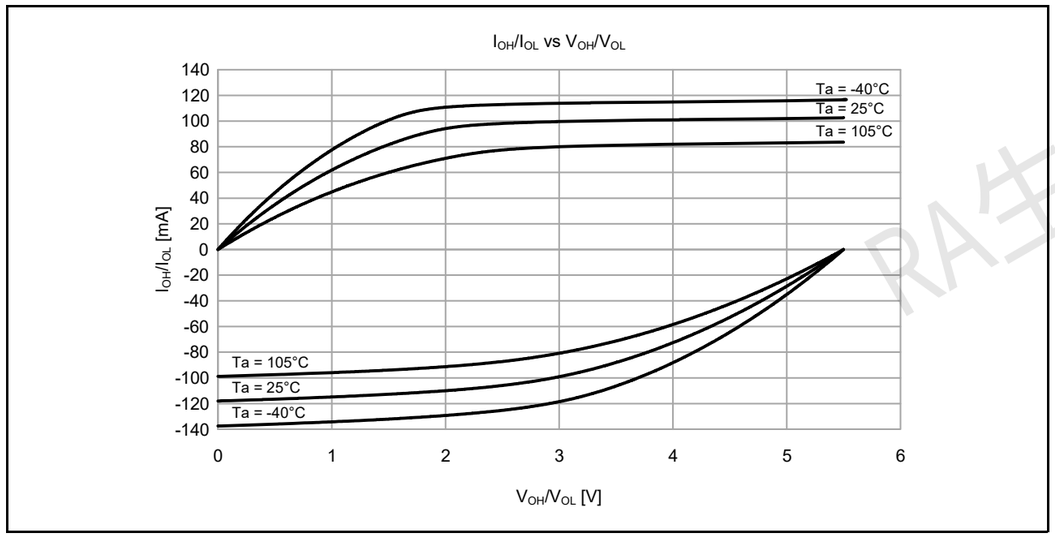

Figure 2.11 **V_{OH}/V_{OL} and I_{OH}/I_{OL} temperature characteristics at VCC = 5.5 V when middle drive output is selected (reference data)**

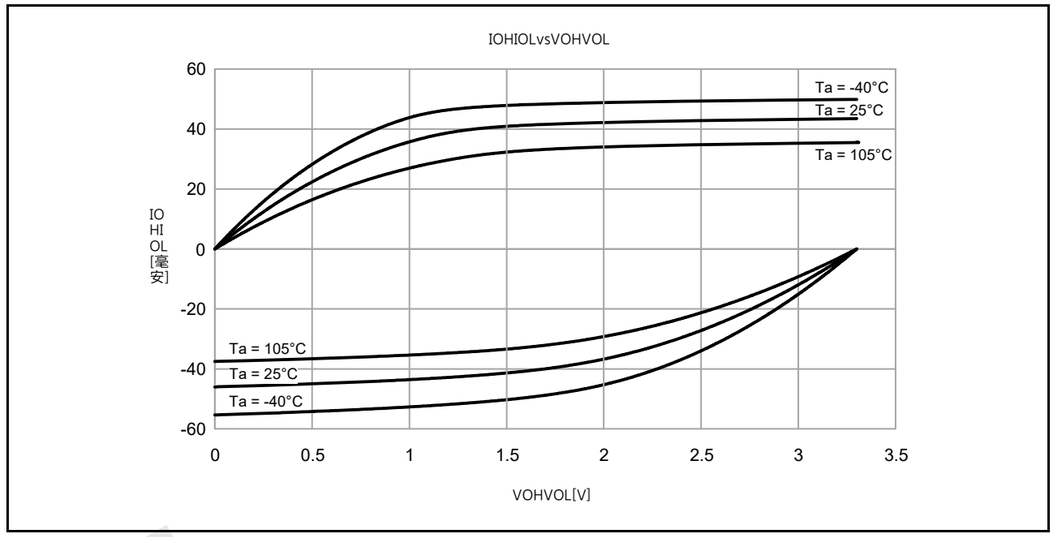

Figure 2.10 **选择中间驱动输出时，VCC=3.3V时的VOHVOL和IOHIOL温度特性（参考数据）**

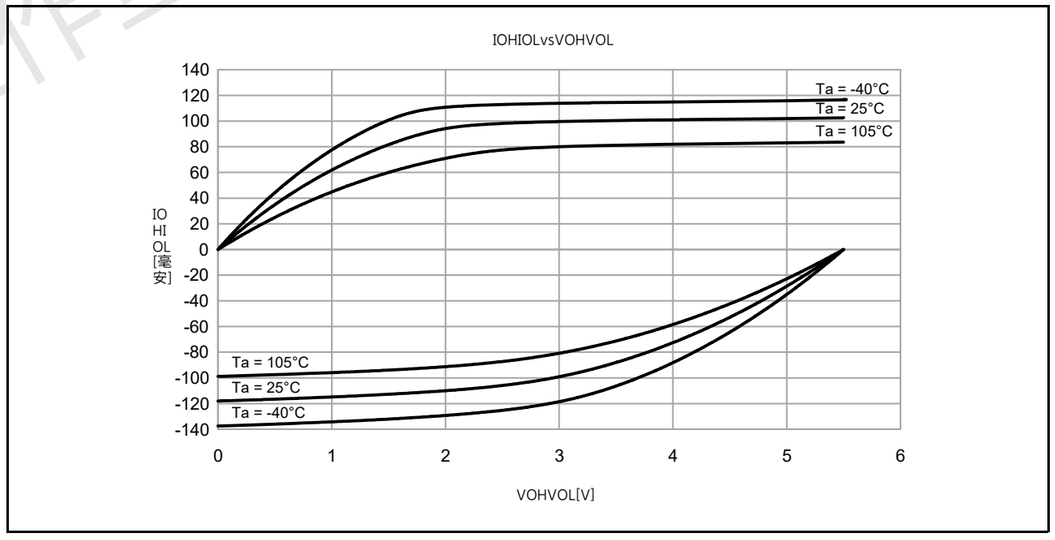

Figure 2.11 **选择中间驱动输出时，VCC=5.5V时的VOHVOL和IOHIOL温度特性（参考数据）**

RA生态工作室

2.2.7 P408, P409 I/O Pin Output Characteristics of Middle Drive Capacity

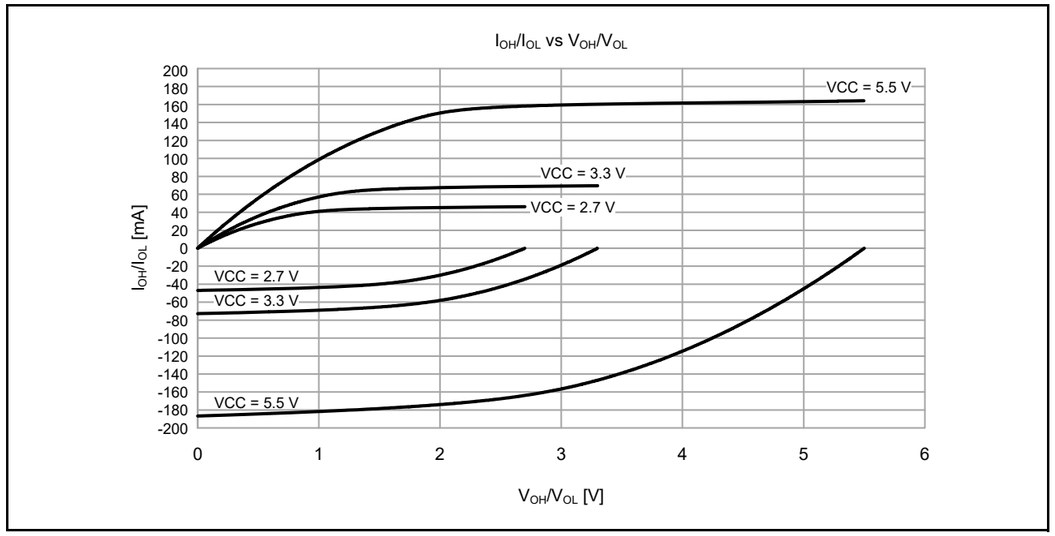

Figure 2.12 V_{OH}/V_{OL} and I_{OH}/I_{OL} voltage characteristics at Ta = 25°C when middle drive output is selected (reference data)

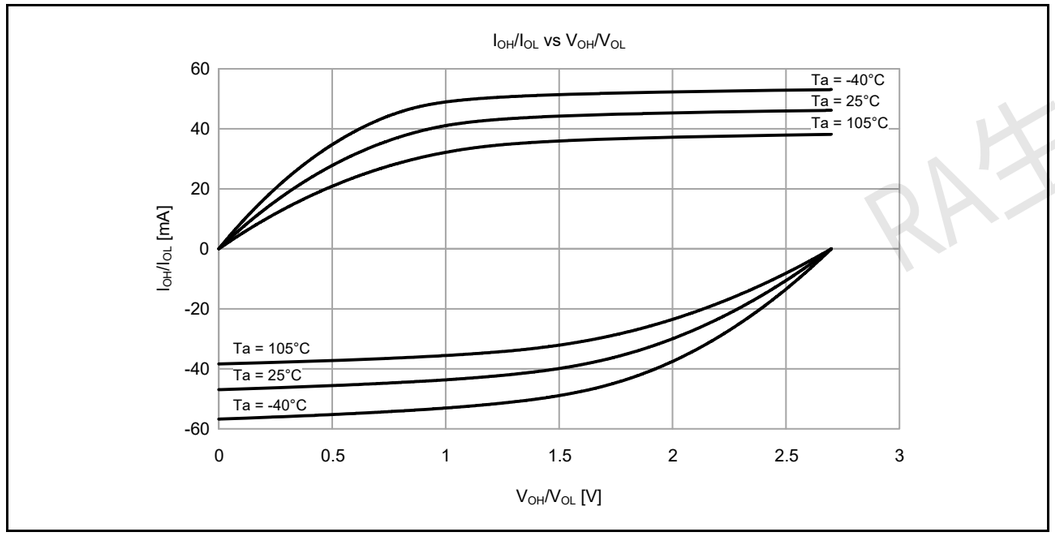

Figure 2.13 V_{OH}/V_{OL} and I_{OH}/I_{OL} temperature characteristics at VCC = 2.7 V when middle drive output is selected (reference data)

2.2.7 P408、P409IO中级驱动容量输出特性

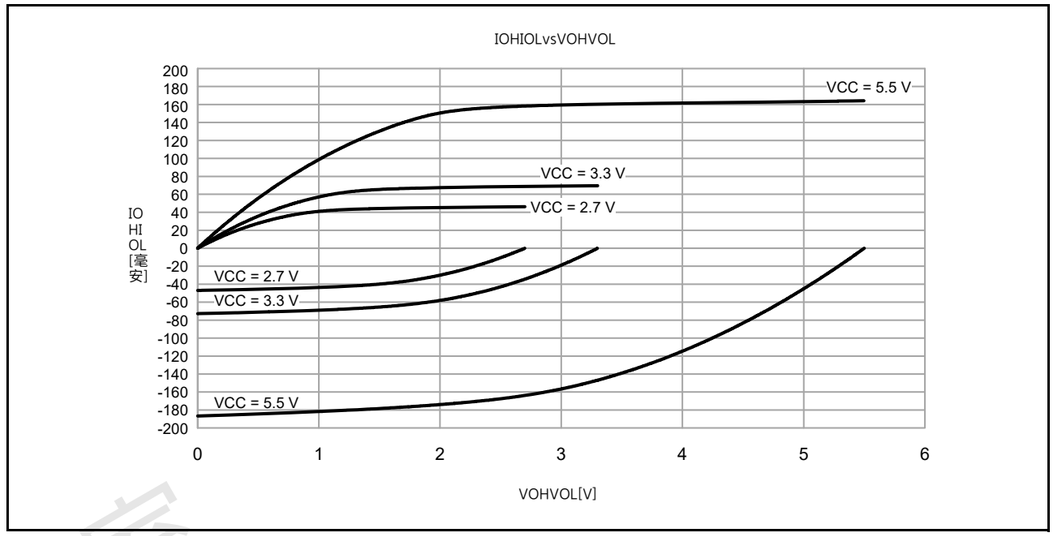

Figure 2.12 选择中间驱动输出时Ta=25°C时的VOHVOL和IOHIOL电压特性（参考数据）

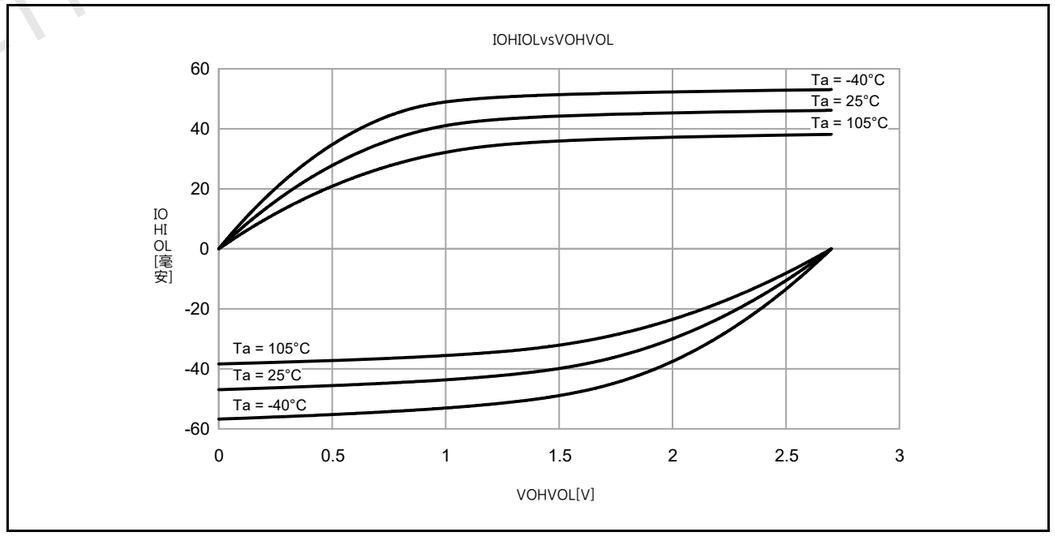

Figure 2.13 选择中间驱动输出时，VCC=2.7V时的VOHVOL和IOHIOL温度特性（参考数据）

RA生态工作室

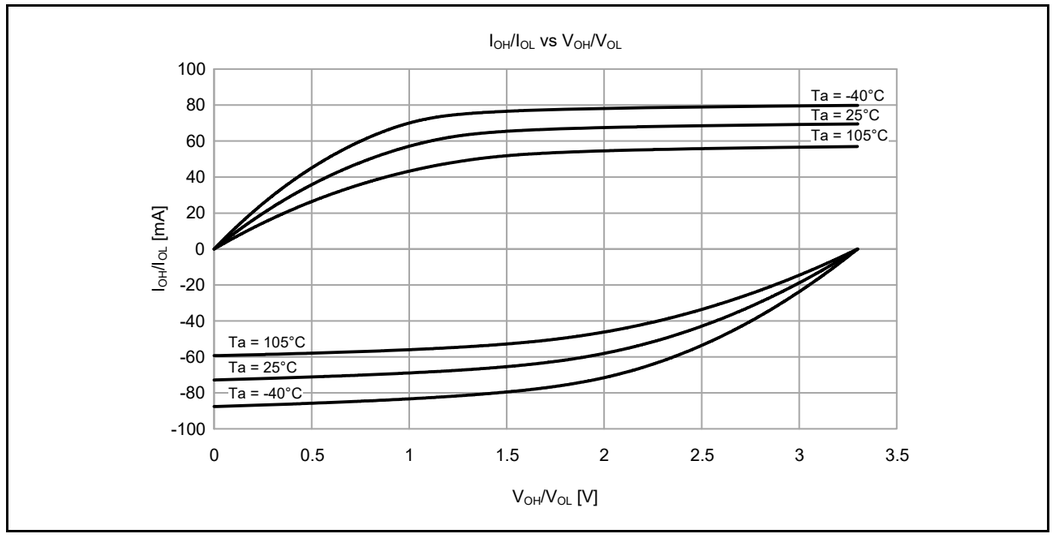

Figure 2.14 **V_{OH}/V_{OL} and I_{OH}/I_{OL} temperature characteristics at VCC = 3.3 V when middle drive output is selected (reference data)**

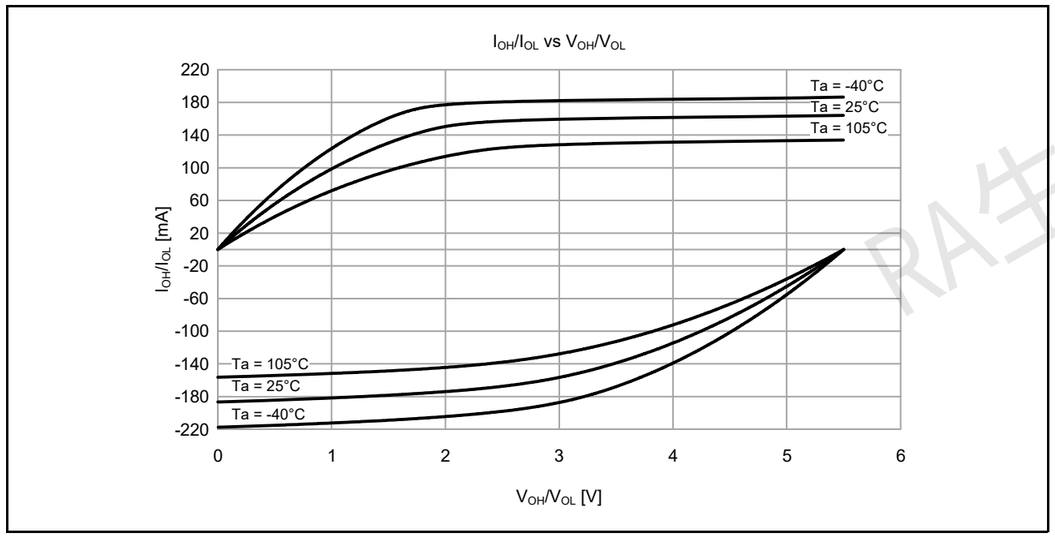

Figure 2.15 **V_{OH}/V_{OL} and I_{OH}/I_{OL} temperature characteristics at VCC = 5.5 V when middle drive output is selected (reference data)**

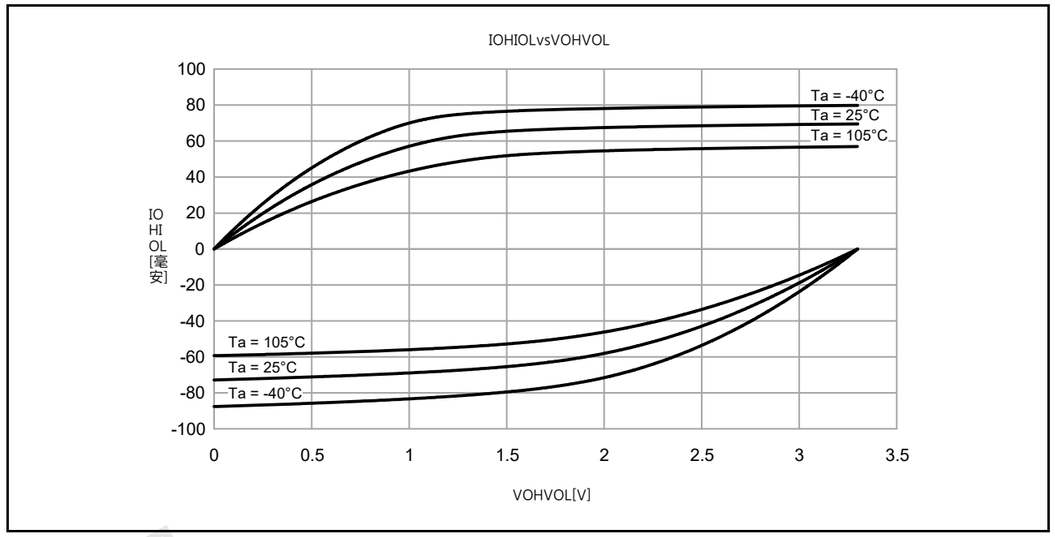

Figure 2.14 **选择中间驱动输出时，VCC=3.3V时的VOHVOL和IOHIOL温度特性（参考数据）**

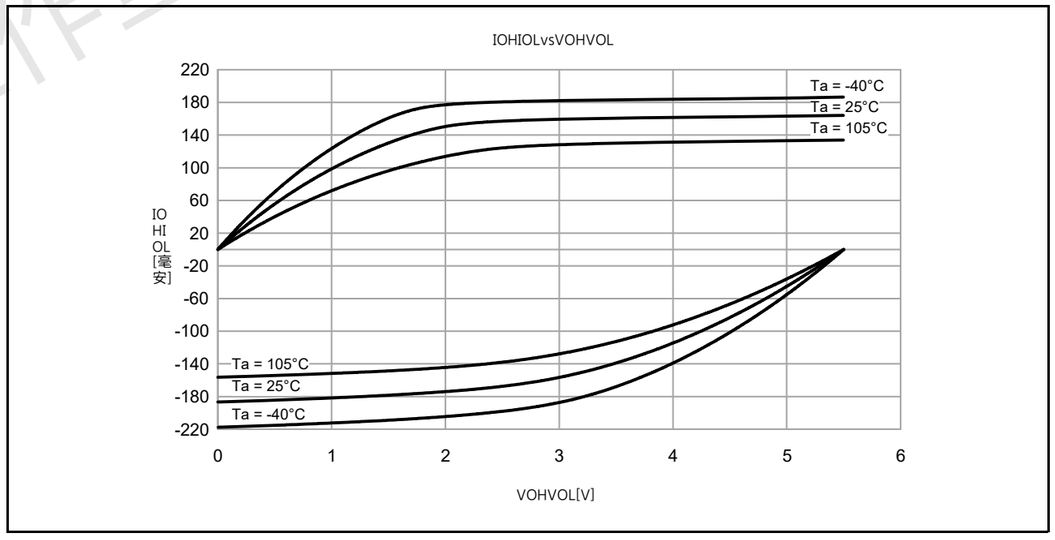

Figure 2.15 **选择中间驱动输出时，VCC=5.5V时的VOHVOL和IOHIOL温度特性（参考数据）**

RA生态工作室

2.2.8 IIC I/O Pin Output Characteristics

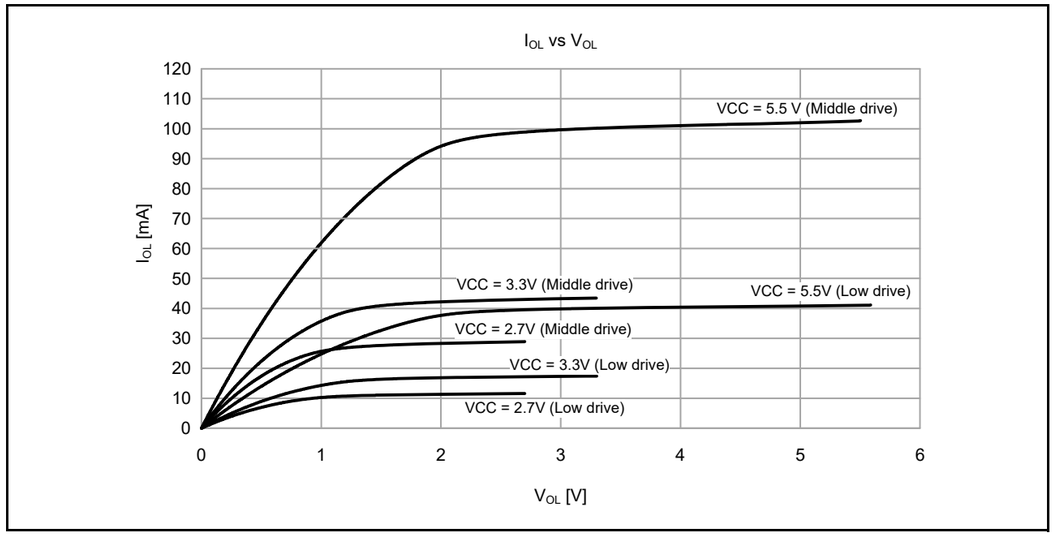

Figure 2.16 V_{OH}/V_{OL} and I_{OH}/I_{OL} voltage characteristics at Ta = 25°C

2.2.8 IICIO引脚输出特性

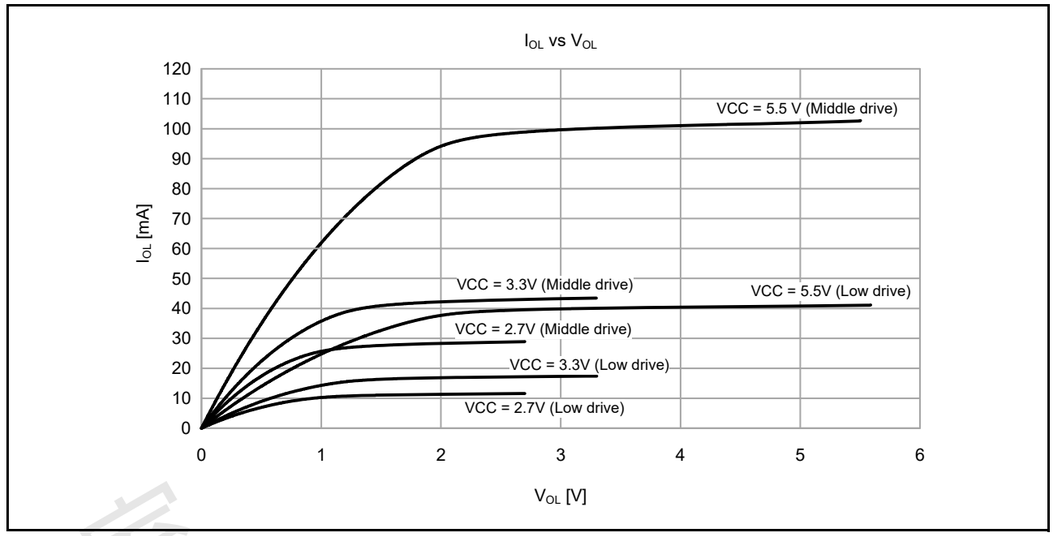

Figure 2.16 Ta=25°C时的VOHVOL和IOHIOL电压特性

RA生态工作室

2.2.9 Operating and Standby Current

Table 2.11 Operating and standby current (1) (1 of 2)
Conditions: VCC = AVCC0 = 1.6 to 5.5 V

Parameter					Symbol	Typ*10	Max	Unit	Test conditions
Supply current*1	High-speed mode*2	Normal mode	All peripheral clock disabled, while (1) code executing from flash*5	ICLK = 48 MHz	I_{CC}	8.3	-	mA	*7
				ICLK = 32 MHz		5.8	-		
				ICLK = 16 MHz		3.5	-		
				ICLK = 8 MHz		2.2	-		
			All peripheral clock disabled, CoreMark code executing from flash*5	ICLK = 48 MHz		16.4	-		
				ICLK = 32 MHz		11.3	-		
				ICLK = 16 MHz		6.4	-		
				ICLK = 8 MHz		4.0	-		
			All peripheral clock enabled, while (1) code executing from flash*5	ICLK = 48 MHz		18.5	-		*9
				ICLK = 32 MHz		13.8	-		*8
				ICLK = 16 MHz		7.7	-		
				ICLK = 8 MHz		4.5	-		
			All peripheral clock enabled, code executing from SRAM*5	ICLK = 48 MHz		-	50.0		*9
		Sleep mode	All peripheral clock disabled*5	ICLK = 48 MHz		3.3	-		*7
				ICLK = 32 MHz		2.4	-		
				ICLK = 16 MHz		1.8	-		
				ICLK = 8 MHz		1.4	-		
			All peripheral clock enabled*5	ICLK = 48 MHz		13.4	-		*9
				ICLK = 32 MHz		10.4	-		*8
				ICLK = 16 MHz		6.0	-		
				ICLK = 8 MHz		3.6	-		
		Increase during BGO operation*6				2.5	-		-
	Middle-speed mode*2	Normal mode	All peripheral clock disabled, while (1) code executing from flash*5	ICLK = 12 MHz	I_{CC}	2.5	-	mA	*7
				ICLK = 8 MHz		2.0	-		
				ICLK = 1 MHz		0.9	-		
			All peripheral clock disabled, CoreMark code executing from flash*5	ICLK = 12 MHz		4.7	-		
				ICLK = 8 MHz		3.7	-		
				ICLK = 1 MHz		1.2	-		
			All peripheral clock enabled, while (1) code executing from flash*5	ICLK = 12 MHz		5.7	-		*8
				ICLK = 8 MHz		4.3	-		
				ICLK = 1 MHz		1.5	-		
			All peripheral clock enabled, code executing from SRAM*5	ICLK = 12 MHz		-	20.0		
		Sleep mode	All peripheral clock disabled*5	ICLK = 12 MHz		1.2	-		*7
				ICLK = 8 MHz		1.2	-		
				ICLK = 1 MHz		0.8	-		
			All peripheral clock enabled*5	ICLK = 12 MHz		4.4	-		*8
				ICLK = 8 MHz		3.4	-		
				ICLK = 1 MHz		1.4	-		
		Increase during BGO operation*6				2.5	-		-

2.2.9 工作和待机电流

Table 2.11 工作和待机电流(1)(1of2)
Conditions: VCC = AVCC0 = 1.6 to 5.5 V

Parameter					Symbol	Typ*10	Max	Unit	测试条件
供电电流*1	High-speed mode*2	正常模式	禁用所有外设时钟，同时(1)代码从闪存执行*5	ICLK = 48 MHz	I_{CC}	8.3	-	mA	*7
				ICLK = 32 MHz		5.8	-		
				ICLK = 16 MHz		3.5	-		
				ICLK = 8 MHz		2.2	-		
			所有外设时钟禁用，Core Mark代码从闪存执行*5	ICLK = 48 MHz		16.4	-		
				ICLK = 32 MHz		11.3	-		
				ICLK = 16 MHz		6.4	-		
				ICLK = 8 MHz		4.0	-		
			启用所有外设时钟，同时(1)代码从闪存执行*5	ICLK = 48 MHz		18.5	-		*9
				ICLK = 32 MHz		13.8	-		*8
				ICLK = 16 MHz		7.7	-		
				ICLK = 8 MHz		4.5	-		
			启用所有外设时钟，从SRAM执行代码*5	ICLK = 48 MHz		-	50.0		*9
		睡眠模式	所有外设时钟禁用*5	ICLK = 48 MHz		3.3	-		*7
				ICLK = 32 MHz		2.4	-		
				ICLK = 16 MHz		1.8	-		
				ICLK = 8 MHz		1.4	-		
			启用所有外设时钟*5	ICLK = 48 MHz		13.4	-		*9
				ICLK = 32 MHz		10.4	-		*8
				ICLK = 16 MHz		6.0	-		
				ICLK = 8 MHz		3.6	-		
		BGO运行时增加*6				2.5	-		-
	Middle-speed mode*2	正常模式	禁用所有外设时钟，同时(1)代码从闪存执行*5	ICLK = 12 MHz	I_{CC}	2.5	-	mA	*7
				ICLK = 8 MHz		2.0	-		
				ICLK = 1 MHz		0.9	-		
			所有外设时钟禁用，Core Mark代码从闪存执行*5	ICLK = 12 MHz		4.7	-		
				ICLK = 8 MHz		3.7	-		
				ICLK = 1 MHz		1.2	-		
			启用所有外设时钟，同时(1)代码从闪存执行*5	ICLK = 12 MHz		5.7	-		*8
				ICLK = 8 MHz		4.3	-		
				ICLK = 1 MHz		1.5	-		
			启用所有外设时钟，从SRAM执行代码*5	ICLK = 12 MHz		-	20.0		
		睡眠模式	所有外设时钟禁用*5	ICLK = 12 MHz		1.2	-		*7
				ICLK = 8 MHz		1.2	-		
				ICLK = 1 MHz		0.8	-		
			启用所有外设时钟*5	ICLK = 12 MHz		4.4	-		*8
				ICLK = 8 MHz		3.4	-		
				ICLK = 1 MHz		1.4	-		
		BGO运行时增加*6				2.5	-		-

RA生态工作室

Table 2.11 Operating and standby current (1) (2 of 2)
Conditions: VCC = AVCC0 = 1.6 to 5.5 V

Parameter					Symbol	Typ*10	Max	Unit	Test conditions
Supply current*1	Low-speed mode*3	Normal mode	All peripheral clock disabled, while (1) code executing from flash*5	ICLK = 1 MHz	I_{CC}	0.4	-	mA	*7
			All peripheral clock disabled, CoreMark code executing from flash*5	ICLK = 1 MHz		0.6	-		
			All peripheral clock enabled, while (1) code executing from flash*5	ICLK = 1 MHz		1.0	-		*8
			All peripheral clock enabled, code executing from SRAM*5	ICLK = 1 MHz		-	2.2		
		Sleep mode	All peripheral clock disabled*5	ICLK = 1 MHz		0.3	-		*7
			All peripheral clock enabled*5	ICLK = 1 MHz		0.9	-		*8
	Low-voltage mode*3	Normal mode	All peripheral clock disabled, while (1) code executing from flash*5	ICLK = 4 MHz	I_{CC}	1.7	-	mA	*7
			All peripheral clock disabled, CoreMark code executing from flash*5	ICLK = 4 MHz		2.8	-		
			All peripheral clock enabled, while (1) code executing from flash*5	ICLK = 4 MHz		3.0	-		*8
			All peripheral clock enabled, code executing from SRAM*5	ICLK = 4 MHz		-	8.0		
		Sleep mode	All peripheral clock disabled*5	ICLK = 4 MHz		1.3	-		*7
			All peripheral clock enabled*5	ICLK = 4 MHz		2.5	-		*8
	Subosc-speed mode*4	Normal mode	All peripheral clock disabled, while (1) code executing from flash*5	ICLK = 32.768 kHz	I_{CC}	8.5	-	μA	*8
			All peripheral clock enabled, while (1) code executing from flash*5	ICLK = 32.768 kHz		14.9	-		
			All peripheral clock enabled, code executing from SRAM*5	ICLK = 32.768 kHz		-	83.0		
		Sleep mode	All peripheral clock disabled*5	ICLK = 32.768 kHz		5.0	-		
			All peripheral clock enabled*5	ICLK = 32.768 kHz		11.4	-		

Note 1. Supply current values do not include output charge/discharge current from all pins. The values apply when internal pull-up MOSs are in the off state.
Note 2. The clock source is HOCO.
Note 3. The clock source is MOCO.
Note 4. The clock source is the sub-clock oscillator.
Note 5. This does not include BGO operation.
Note 6. This is the increase for programming or erasure of the flash memory for data storage during program execution.
Note 7. FCLK, PCLKA, PCLKB, PCLKC, and PCLKD are set to divided by 64.
Note 8. FCLK, PCLKA, PCLKB, PCLKC, and PCLKD are the same frequency as that of ICLK.
Note 9. FCLK and PCLKB are set to divided by 2 and PCLKA, PCLKC, and PCLKD are the same frequency as that of ICLK.
Note 10. VCC = 3.3 V.

Table 2.11 工作和待机电流(1)(2of2)
Conditions: VCC = AVCC0 = 1.6 to 5.5 V

Parameter					Symbol	Typ*10	Max	Unit	测试条件
供电电流*1	Low-speed mode*3	正常模式	禁用所有外设时钟，同时(1)代码从闪存执行*5	ICLK = 1 MHz	I_{CC}	0.4	-	mA	*7
			所有外设时钟禁用，Core Mark代码从闪存执行*5	ICLK = 1 MHz		0.6	-		
			启用所有外设时钟，同时(1)代码从闪存执行*5	ICLK = 1 MHz		1.0	-		*8
			启用所有外设时钟，从SRAM执行代码*5	ICLK = 1 MHz		-	2.2		
		睡眠模式	所有外设时钟禁用*5	ICLK = 1 MHz		0.3	-		*7
			启用所有外设时钟*5	ICLK = 1 MHz		0.9	-		*8
	Low-voltage mode*3	正常模式	禁用所有外设时钟，同时(1)代码从闪存执行*5	ICLK = 4 MHz	I_{CC}	1.7	-	mA	*7
			所有外设时钟禁用，Core Mark代码从闪存执行*5	ICLK = 4 MHz		2.8	-		
			启用所有外设时钟，同时(1)代码从闪存执行*5	ICLK = 4 MHz		3.0	-		*8
			启用所有外设时钟，从SRAM执行代码*5	ICLK = 4 MHz		-	8.0		
		睡眠模式	所有外设时钟禁用*5	ICLK = 4 MHz		1.3	-		*7
			启用所有外设时钟*5	ICLK = 4 MHz		2.5	-		*8
	Subosc-speed mode*4	正常模式	禁用所有外设时钟，同时(1)代码从闪存执行*5	ICLK = 32.768 kHz	I_{CC}	8.5	-	μA	*8
			启用所有外设时钟，同时(1)代码从闪存执行*5	ICLK = 32.768 kHz		14.9	-		
			启用所有外设时钟，从SRAM执行代码*5	ICLK = 32.768 kHz		-	83.0		
		睡眠模式	所有外设时钟禁用*5	ICLK = 32.768 kHz		5.0	-		
			启用所有外设时钟*5	ICLK = 32.768 kHz		11.4	-		

Note 1. 电源电流值不包括所有引脚的输出充电放电电流。这些值适用于内部上拉时MOS处于关闭状态。
Note 2. 时钟源是HOCO。
Note 3. 时钟源为MOCO。
Note 4. 时钟源是子时钟振荡器。
Note 5. 这不包括BGO操作。
Note 6. 这是在程序执行期间用于数据存储的闪存的编程或擦除的增加。
Note 7. FCLK、PCLKA、PCLKB、PCLKC和PCLKD设置为64分频。
Note 8. FCLK、PCLKA、PCLKB、PCLKC、PCLKD与ICLK的频率相同。
Note 9. FCLK和PCLKB设置为2分频，P CLKA、PCLKC和PCLKD的频率与ICLK的频率相同。
Note 10. VCC = 3.3 V.

RA生态工作室

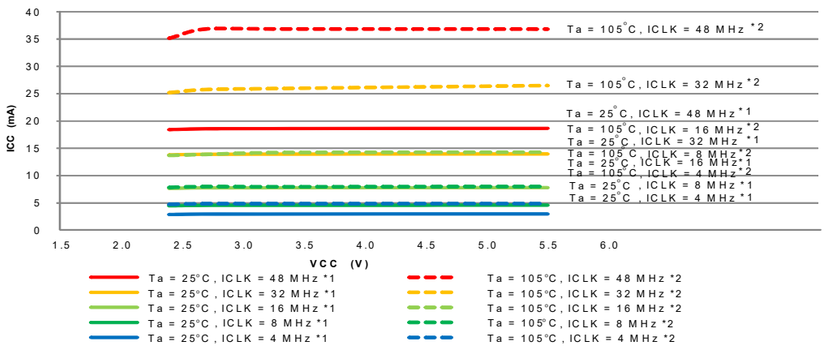

Note 1. All peripheral operations except any BGO operation are operating normally. This is the average of the actual measurements of the sample cores during product evaluation.

Note 2. All peripheral operations except any BGO operation are operating at maximum. This is the average of the actual measurements for the upper limit samples during product evaluation.

Figure 2.17 Voltage dependency in high-speed operating mode (reference data)

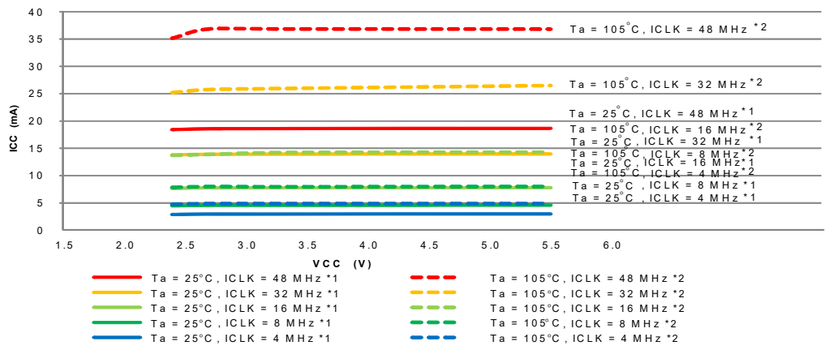

注1.除任何BGO操作外，所有外设操作均正常运行。这是产品评估期间样品芯的实际测量值的平均值。注2.除任何BGO操作外，所有外设操作都在最大运行。这是产品评估期间上限样品的实际测量值的平均值。

Figure 2.17 高速运行模式下的电压依赖性（参考数据）

RA生态工作室

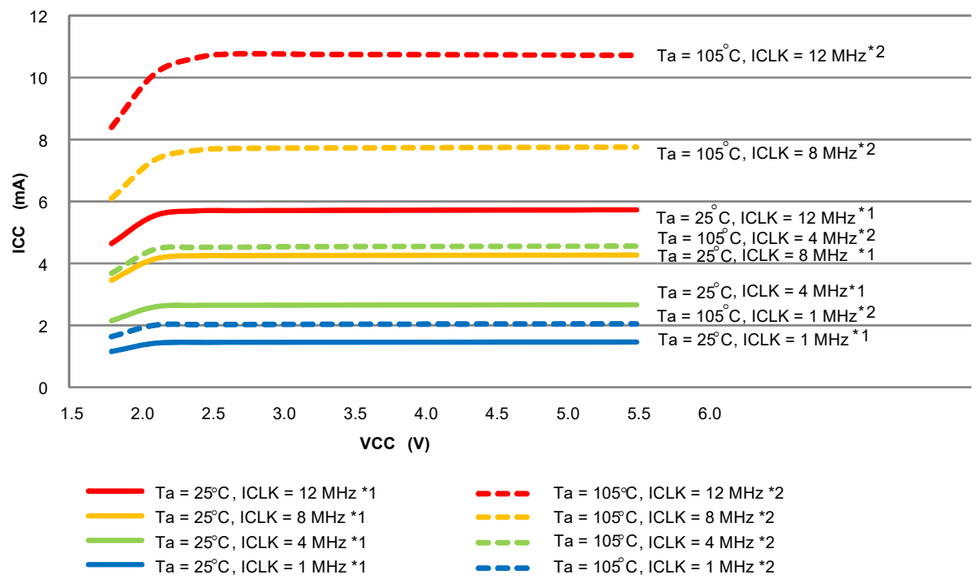

Note 1. All peripheral operations except any BGO operation are operating normally. This is the average of the actual measurements of the sample cores during product evaluation.

Note 2. All peripheral operations except any BGO operation are operating at maximum. This is the average of the actual measurements for the upper limit samples during product evaluation.

Figure 2.18 Voltage dependency in middle-speed operating mode (reference data)

RA生态工作室

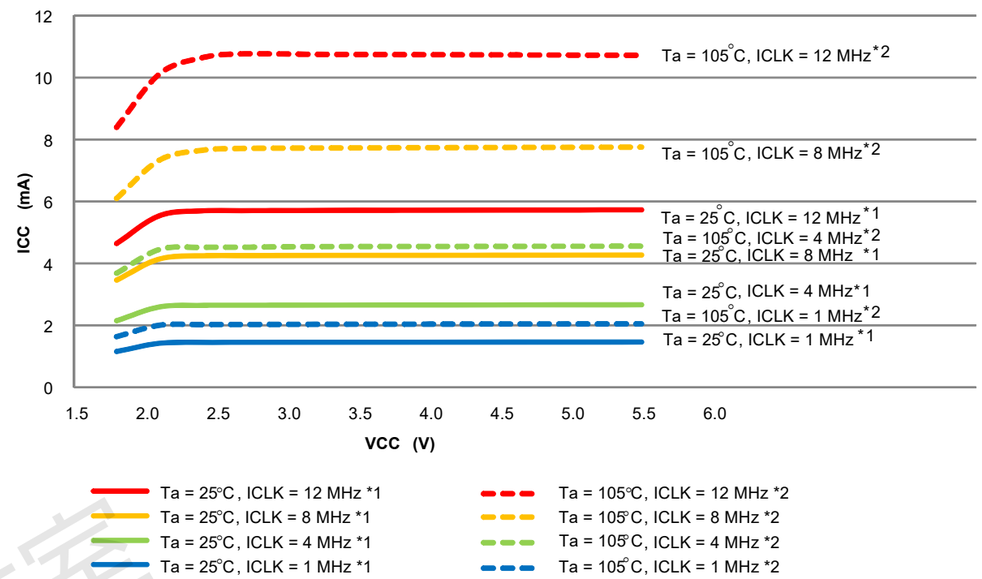

注1.除任何BGO操作外，所有外设操作均正常运行。这是产品评估期间样品芯的实际测量值的平均值。注2.除任何BGO操作外，所有外设操作都在最大运行。这是产品评估期间上限样品的实际测量值的平均值。

Figure 2.18 中速运行模式下的电压依赖性（参考数据）

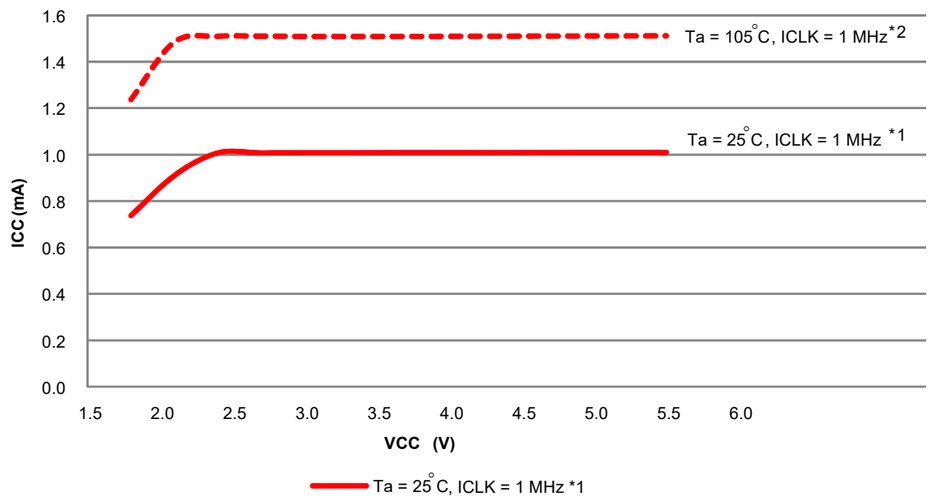

Note 1. All peripheral operations except any BGO operation are operating normally. This is the average of the actual measurements of the sample cores during product evaluation.

Note 2. All peripheral operations except any BGO operation are operating at maximum. This is the average of the actual measurements for the upper limit samples during product evaluation.

Figure 2.19 Voltage dependency in Low-speed mode (reference data)

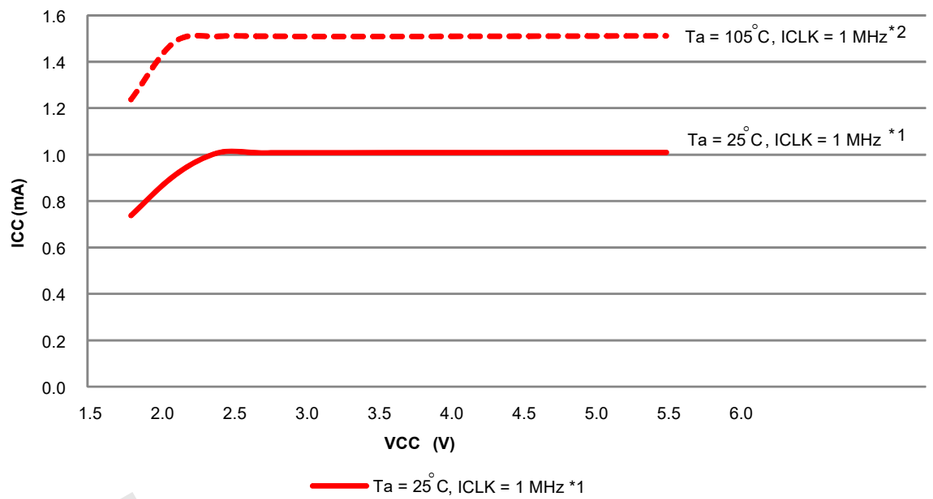

注1.除任何BGO操作外，所有外设操作均正常运行。这是产品评估期间样品芯的实际测量值的平均值。注2.除任何BGO操作外，所有外设操作都在最大运行。这是产品评估期间上限样品的实际测量值的平均值。

Figure 2.19 低速模式下的电压依赖性（参考数据）

RA生态工作室

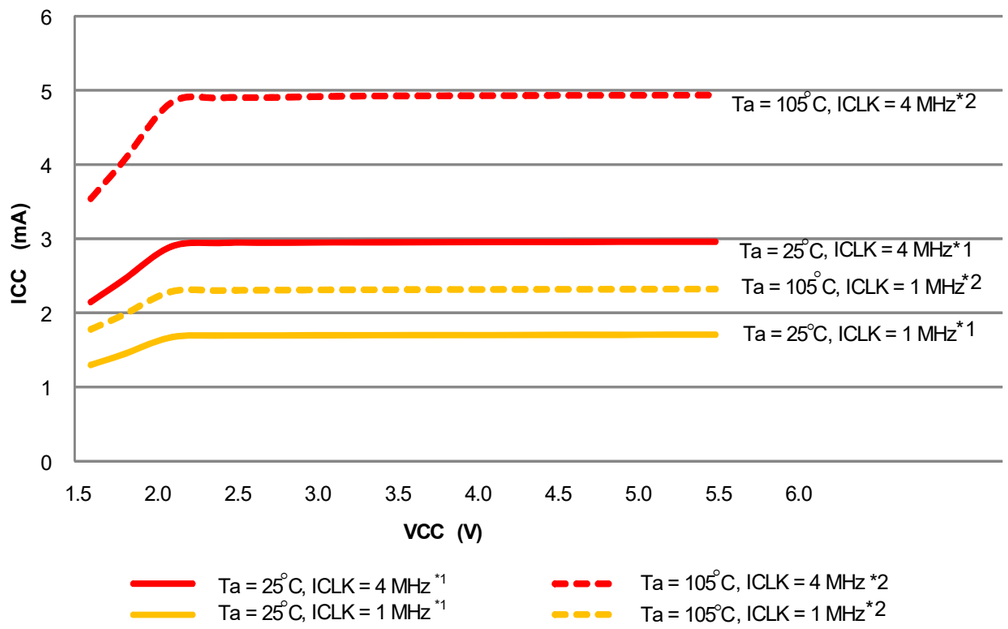

Note 1. All peripheral operations except any BGO operation are operating normally. This is the average of the actual measurements of the sample cores during product evaluation.

Note 2. All peripheral operations except any BGO operation are operating at maximum. This is the average of the actual measurements for the upper limit samples during product evaluation.

Figure 2.20 Voltage dependency in low-voltage mode (reference data)

RA生态工作室

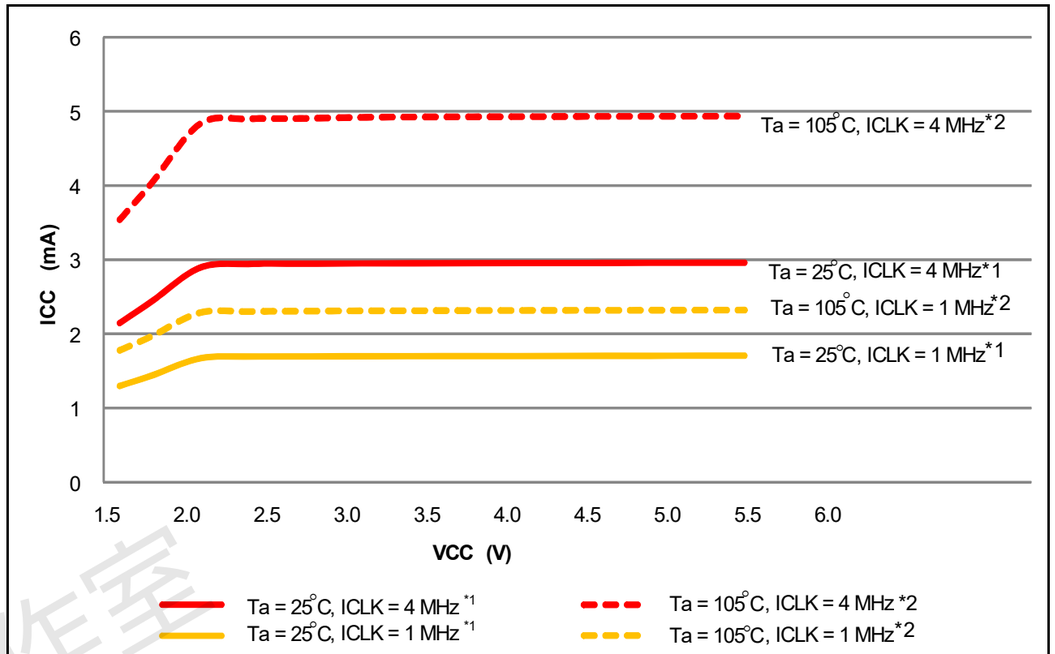

注1.除任何BGO操作外，所有外设操作均正常运行。这是产品评估期间样品芯的实际测量值的平均值。注2.除任何BGO操作外，所有外设操作都在最大运行。这是产品评估期间上限样品的实际测量值的平均值。

Figure 2.20 低压模式下的电压依赖性（参考数据）

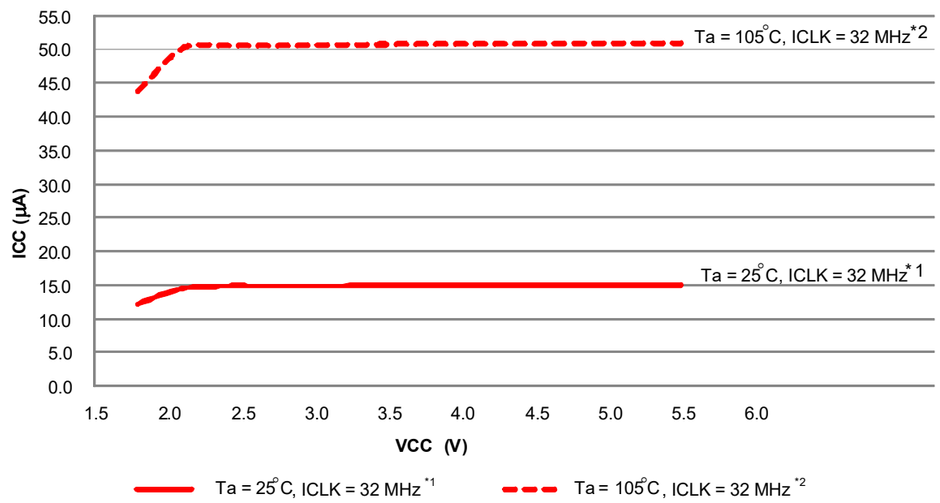

Note 1. All peripheral operations except any BGO operation are operating normally. This is the average of the actual measurements of the sample cores during product evaluation.

Note 2. All peripheral operations except any BGO operation are operating at maximum. This is the average of the actual measurements for the upper limit samples during product evaluation.

Figure 2.21 Voltage dependency in Subosc-speed mode (reference data)

Table 2.12 Operating and standby current (2)

Conditions: VCC = AVCC0 = 1.6 to 5.5 V

Parameter			Symbol	Typ*4	Max	Unit	Test conditions
Supply current*1	Software Standby mode*2	T_a = 25°C	I_{CC}	0.8	4.5	μA	-
		T_a = 55°C		1.3	7.1		
		T_a = 85°C		3.5	20.2		
		T_a = 105°C		8.7	53.7		
	Increment for RTC operation with low-speed on-chip oscillator*3			0.5	-		-
	Increment for RTC operation with sub-clock oscillator*3			0.4	-		SOMCR.SODRV[1:0] are 11b (Low power mode 3)
				1.2	-		SOMCR.SODRV[1:0] are 00b (Normal mode)

Note 1. Supply current values do not include output charge/discharge current from all pins. The values apply when internal pull-up MOSs are in the off state.

Note 2. The IWDT and LVD are not operating.

Note 3. Includes the current of sub-oscillation circuit or low-speed on-chip oscillator.

Note 4. VCC = 3.3 V.

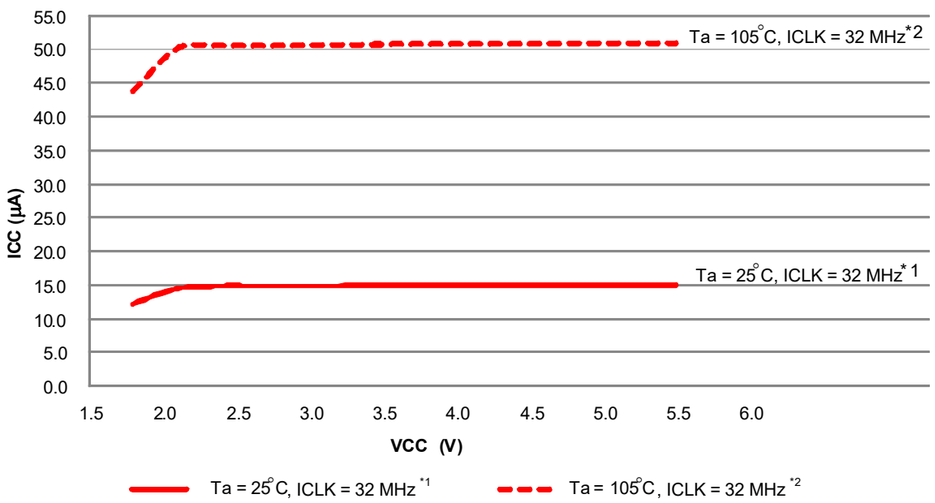

注1.除任何BGO操作外，所有外设操作均正常运行。这是产品评估期间样品芯的实际测量值的平均值。注2.除任何BGO操作外，所有外设操作都在最大运行。这是产品评估期间上限样品的实际测量值的平均值。

Figure 2.21 Subosc速度模式下的电压依赖性（参考数据）

Table 2.12 工作和待机电流(2)

Conditions: VCC = AVCC0 = 1.6 to 5.5 V

Parameter			Symbol	Typ*4	Max	Unit	测试条件
Supply current*1	软件待机模式*2	T_a = 25°C	I_{CC}	0.8	4.5	μA	-
		T_a = 55°C		1.3	7.1		
		T_a = 85°C		3.5	20.2		
		T_a = 105°C		8.7	53.7		
	使用低速片上振荡器*3的RTC操作增量			0.5	-		-
	使用副时钟振荡器的RTC操作增量*3			0.4	-		SOMCR.SODRV[1:0]为11b（低功耗模式3）
				1.2	-		SOMCR.SODRV[1:0] are 00b (Normal mode)

Note 1. 电源电流值不包括所有引脚的输出充电放电电流。这些值适用于内部上拉时MOS处于关闭状态。

Note 2. IWDT和LVD未运行。

Note 3. 包括子振荡电路或低速片上振荡器的电流。

Note 4. VCC = 3.3 V.

RA生态工作室

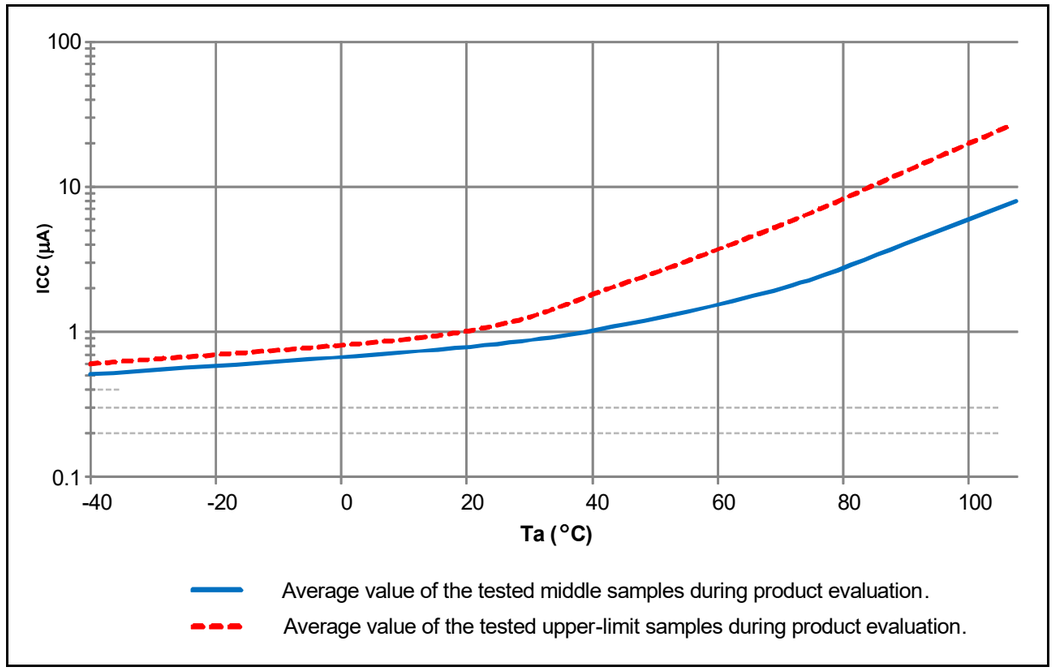

Figure 2.22 Temperature dependency in Software Standby mode all SRAM (reference data)

Table 2.13 Operating and standby current (3)

Conditions: VCC = AVCC0 = 0V, VBATT = 1.6 to 3.6 V, VSS = AVSS0 = 0V

Parameter			Symbol	Typ	Max	Unit	Test conditions
Supply current*1	RTC operation when VCC is off	T_a = 25°C	I_{CC}	0.8	-	μA	VBATT = 2.0 V SOMCR.SORDRV[1:0] = 11b (Low power mode 3)
		T_a = 55°C		0.9	-		
		T_a = 85°C		1.0	-		
		T_a = 105°C		1.1	-		
		T_a = 25°C		0.9	-		VBATT = 3.3 V SOMCR.SORDRV[1:0] = 11b (Low power mode 3)
		T_a = 55°C		1.0	-		
		T_a = 85°C		1.1	-		
		T_a = 105°C		1.2	-		
		T_a = 25°C		1.5	-		VBATT = 2.0 V SOMCR.SORDRV[1:0] = 00b (Normal mode)
		T_a = 55°C		1.7	-		
		T_a = 85°C		2.0	-		
		T_a = 105°C		2.2	-		
		T_a = 25°C		1.6	-		VBATT = 3.3 V SOMCR.SORDRV[1:0] = 00b (Normal mode)
		T_a = 55°C		1.8	-		
		T_a = 85°C		2.1	-		
		T_a = 105°C		2.3	-		

Note 1. Supply current values do not include output charge/discharge current from all pins. The values apply when internal pull-up MOSs are in the off state.

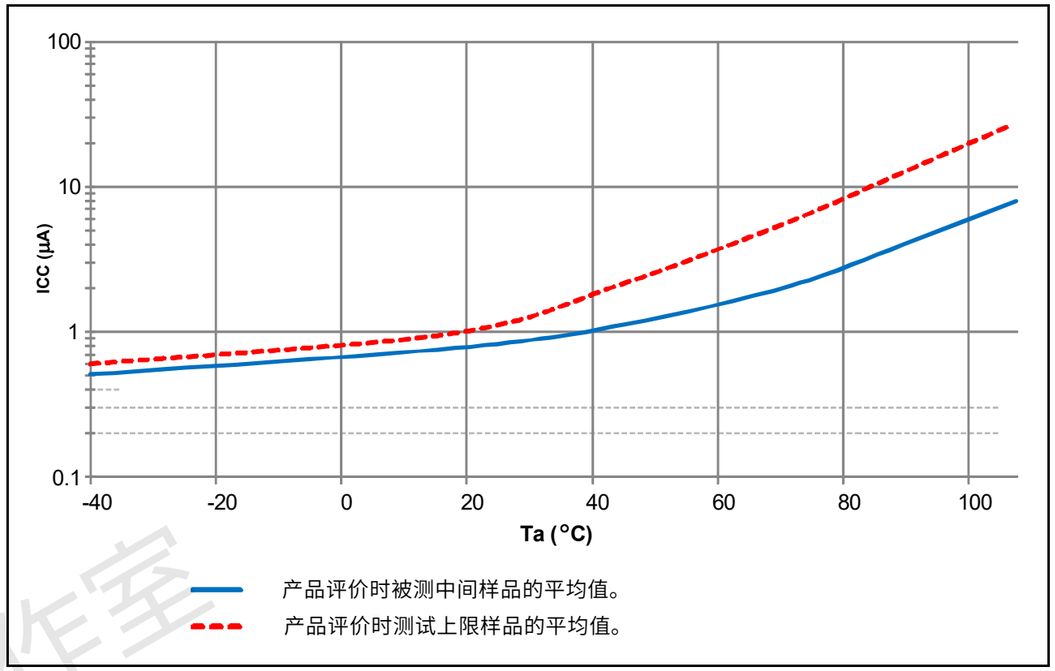

Figure 2.22 软件待机模式下的温度依赖性所有SRAM（参考数据）

Table 2.13 工作和待机电流(3)

Conditions: VCC = AVCC0 = 0V, VBATT = 1.6 to 3.6 V, VSS = AVSS0 = 0V

Parameter			Symbol	Typ	Max	Unit	测试条件
Supply current*1	VCC关闭时的RTC操作	T_a = 25°C	I_{CC}	0.8	-	μA	VBATT = 2.0 V SOMCR.SORDRV[1:0]=11b（低功耗模式3）
		T_a = 55°C		0.9	-		
		T_a = 85°C		1.0	-		
		T_a = 105°C		1.1	-		
		T_a = 25°C		0.9	-		VBATT = 3.3 V SOMCR.SORDRV[1:0]=11b（低功耗模式3）
		T_a = 55°C		1.0	-		
		T_a = 85°C		1.1	-		
		T_a = 105°C		1.2	-		
		T_a = 25°C		1.5	-		VBATT = 2.0 V SOMCR.SORDRV[1:0] = 00b (Normal mode)
		T_a = 55°C		1.7	-		
		T_a = 85°C		2.0	-		
		T_a = 105°C		2.2	-		
		T_a = 25°C		1.6	-		VBATT = 3.3 V SOMCR.SORDRV[1:0] = 00b (Normal mode)
		T_a = 55°C		1.8	-		
		T_a = 85°C		2.1	-		
		T_a = 105°C		2.3	-		

Note 1. 电源电流值不包括所有引脚的输出充电放电电流。这些值适用于内部上拉时MOS处于关闭状态。

RA生态工作室

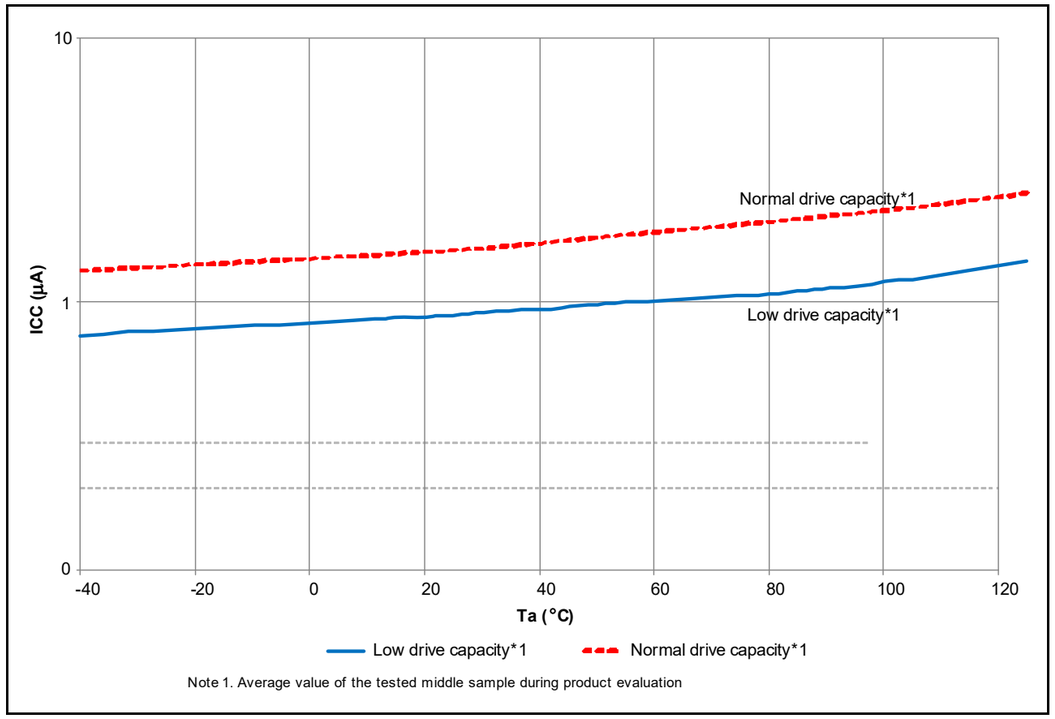

Figure 2.23 Temperature dependency of RTC operation with VCC off (reference data)

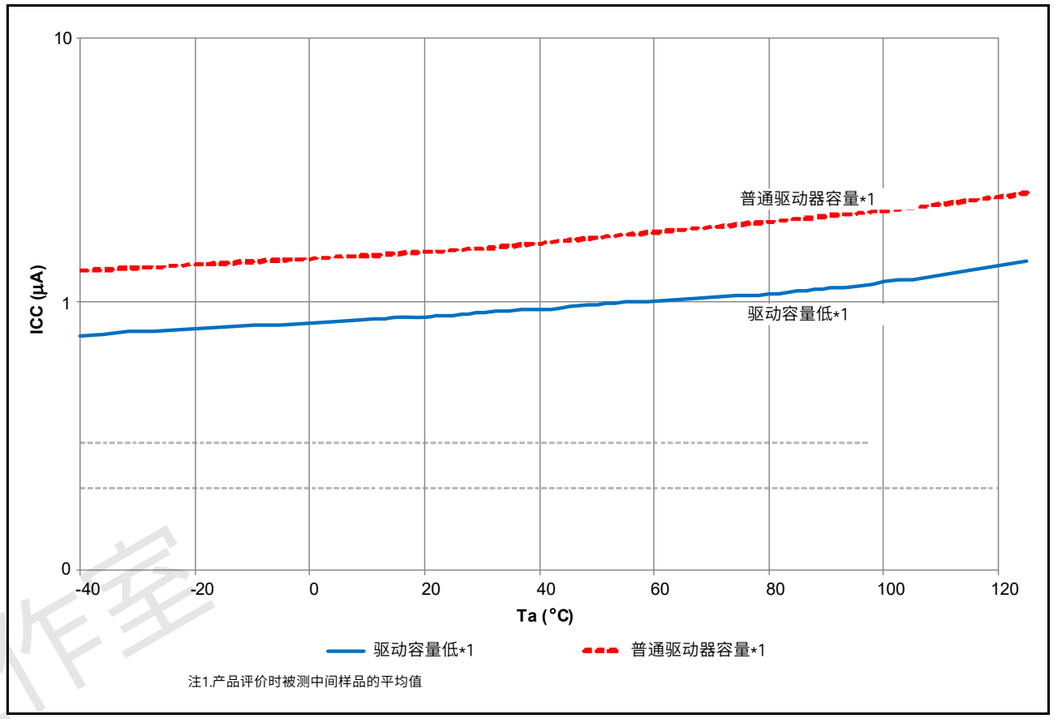

Figure 2.23 VCC关闭时RTC操作的温度依赖性（参考数据）

RA生态工作室

Table 2.14 Operating and standby current (4)

Conditions: VCC = AVCC0 = 1.6 to 5.5 V, VREFH0 = 2.7 V to AVCC0

Parameter			Symbol	Min	Typ	Max	Unit	Test conditions
Analog power supply current	During A/D conversion (at high-speed conversion)		I_{AVCC}	-	-	3.0	mA	-
	During A/D conversion (at low-power conversion)			-	-	1.0	mA	-
	During D/A conversion (per channel)*1			-	0.4	0.8	mA	-
	Waiting for A/D and D/A conversion (all units)*6			-	-	1.0	μA	-
Reference power supply current	During A/D conversion		I_{REFH0}	-	-	150	μA	-
	Waiting for A/D conversion (all units)			-	-	60	nA	-
	During D/A conversion		I_{REFH}	-	50	100	μA	-
	Waiting for D/A conversion (all units)			-	-	100	μA	-
Temperature sensor			I_{TNS}	-	75	-	μA	-
Low-Power Analog Comparator operating current	Window mode		I_{CMPLP}	-	15	-	μA	-
	Comparator High-speed mode			-	10	-	μA	-
	Comparator Low-speed mode			-	2	-	μA	-
	Comparator Low-speed mode using DAC8			-	820	-	μA	-
Operational Amplifier operating current	Low power mode	1 unit operating	I_{AMP}	-	2.5	4.0	μA	-
		2 units operating		-	4.5	8.0	μA	-
		3 units operating		-	6.5	11.0	μA	-
		4 units operating		-	8.5	14.0	μA	-
	High-speed mode	1 unit operating		-	140	220	μA	-
		2 units operating		-	280	410	μA	-
		3 units operating		-	420	600	μA	-
		4 units operating		-	560	780	μA	-
LCD operating current	External resistance division method $f_{LCD} = f_{SUB}$ = 128 Hz, 1/3 bias, and 4-time slice		I_{LCD1}*5	-	0.34	-	μA	-
	Internal voltage boosting method (VLCD.VLCD = 04) $f_{LCD} = f_{SUB}$ = 128 Hz, 1/3 bias, and 4-time slice		I_{LCD2}*5	-	0.92	-	μA	-
	Capacitor split method $f_{LCD} = f_{SUB}$ = 128 Hz, 1/3 bias, and 4-time slice		I_{LCD3}*5	-	0.19	-	μA	-
USB operating current	During USB communication operation under the following settings and conditions: • Host controller operation is set to full-speed mode Bulk OUT transfer (64 bytes) × 1, bulk IN transfer (64 bytes) × 1 • Connect peripheral devices via a 1-meter USB cable from the USB port.		I_{USBH}*2	-	4.3 (VCC) 0.9 (VCC_USB)*4	-	mA	-
	During USB communication operation under the following settings and conditions: • Device controller operation is set to full-speed mode Bulk OUT transfer (64 bytes) × 1, bulk IN transfer (64 bytes) × 1 • Connect the host device via a 1-meter USB cable from the USB port.		I_{USBF}*2	-	3.6 (VCC) 1.1 (VCC_USB)*4	-	mA	-
	During suspended state under the following setting and conditions: • Device controller operation is set to full-speed mode (pull up the USB_DP pin) • Software standby mode • Connect the host device via a 1-meter USB cable from the USB port.		I_{SUSP}*3	-	0.35 (VCC) 170 (VCC_USB)*4	-	μA	-

Note 1. The reference power supply current is included in the power supply current value for D/A conversion.
Note 2. Current consumed only by the USBFS.
Note 3. Includes the current supplied from the pull-up resistor of the USB_DP pin to the pull-down resistor of the host device, in addition to the current consumed by the MCU during the suspended state.
Note 4. When VCC = VCC_USB = 3.3 V.
Note 5. Current flowing only to the LCD controller. Not including the current that flows through the LCD panel.
Note 6. When the MCU is in Software Standby mode or the MSTPCRD.MSTPD16 (ADC140 module stop bit) is in the module-stop state.

Table 2.14 工作和待机电流(4)

Conditions: VCC = AVCC0 = 1.6 to 5.5 V, VREFH0 = 2.7 V to AVCC0

Parameter			Symbol	Min	Typ	Max	Unit	测试条件
模拟电源电流	AD转换期间（高速转换时）		I_{AVCC}	-	-	3.0	mA	-
	AD转换期间（低功率转换时）			-	-	1.0	mA	-
	DA转换期间（每个通道）*1			-	0.4	0.8	mA	-
	等待AD和DA转换（所有单位）*6			-	-	1.0	μA	-
参考电源电流	在AD转换期间		I_{REFH0}	-	-	150	μA	-
	等待AD转换（所有单位）			-	-	60	nA	-
	DA转换期间		I_{REFH}	-	50	100	μA	-
	等待DA转换（所有单位）			-	-	100	μA	-
温度感应器			I_{TNS}	-	75	-	μA	-
Low-Power Analog 比较器工作电流	窗口模式		I_{CMPLP}	-	15	-	μA	-
	比较器高速模式			-	10	-	μA	-
	比较器低速模式			-	2	-	μA	-
	使用DAC8的比较器低速模式			-	820	-	μA	-
Operational 放大器工作电流	低功耗模式	1个单位运营	I_{AMP}	-	2.5	4.0	μA	-
		2个单位运营		-	4.5	8.0	μA	-
		3个单位运营		-	6.5	11.0	μA	-
		4个单位运营		-	8.5	14.0	μA	-
	High-speed mode	1个单位运营		-	140	220	μA	-
		2个单位运营		-	280	410	μA	-
		3个单位运营		-	420	600	μA	-
		4个单位运营		-	560	780	μA	-
液晶工作电流	外部电阻分压方法fLCD=fSUB=128Hz 13偏置 4-timeslice		I_{LCD1}*5	-	0.34	-	μA	-
	内部升压方式(VLCD.VLCD=04)fLCD=fSUB=128Hz 13偏置 4-timeslice		I_{LCD2}*5	-	0.92	-	μA	-
	电容分割法fLCD=fSUB=128Hz 13偏置 4-timeslice		I_{LCD3}*5	-	0.19	-	μA	-
USB工作电流	在以下设置和条件下进行USB通信操作期间： 主机控制器操作设置为全速模式BulkOUT传输（64字节）×1，批量IN传输（64字节）×1 通过1米连接外围设备来自USB端口的USB电缆。		I_{USBH}*2	-	4.3 (VCC) 0.9 (VCC_USB)*4	-	mA	-
	在以下设置和条件下进行USB通信操作期间： 设备控制器操作设置为全速模式BulkOUT传输（64字节）×1，批量IN传输（64字节）×1 通过1-连接主机设备米USB电缆从USB端口。		I_{USBF}*2	-	3.6 (VCC) 1.1 (VCC_USB)*4	-	mA	-
	在以下设置和条件下处于挂起状态： 设备控制器操作设置为全速模式（拉起USB_DP引脚） 软件待机模式 通过USB端口通过1米长的USB电缆连接主机设备。		I_{SUSP}*3	-	0.35 (VCC) 170 (VCC_USB)*4	-	μA	-

Note 1. 基准电源电流包含在DA转换的电源电流值中。
Note 2. 仅由USBFS消耗的电流。
Note 3. 包括从USB_DP引脚的上拉电阻提供给主机设备下拉电阻的电流，以及MCU在挂起状态期间消耗的电流。
Note 4. When VCC = VCC_USB = 3.3 V.
Note 5. 电流仅流向LCD控制器。不包括流过LCD面板的电流。
Note 6. 当MCU处于软件待机模式或MSTPCRD.MSTPD16（ADC140模块停止位）处于模块停止状态时。

RA生态工作室

2.2.10 VCC Rise and Fall Gradient and Ripple Frequency

Table 2.15 Rise and fall gradient characteristics

Conditions: VCC = AVCC0 = 0 to 5.5 V

Parameter		Symbol	Min	Typ	Max	Unit	Test conditions
Power-on VCC rising gradient	Voltage monitor 0 reset disabled at startup (normal startup)	SrVCC	0.02	-	2	ms/V	-
	Voltage monitor 0 reset enabled at startup*1		0.02	-	-		
	SCI/USB boot mode*2		0.02	-	2		

Note 1. When OFS1.LVDAS = 0.

Note 2. At boot mode, the reset from voltage monitor 0 is disabled regardless of the value of OFS1.LVDAS bit.

Table 2.16 Rising and falling gradient and ripple frequency characteristics

Conditions: VCC = AVCC0 = VCC_USB = 1.6 to 5.5 V

The ripple voltage must meet the allowable ripple frequency $f_{r(VCC)}$ within the range between the VCC upper limit (5.5 V) and lower limit (1.6 V).

When VCC change exceeds VCC ±10%, the allowable voltage change rising/falling gradient dt/dVCC must be met.

Parameter	Symbol	Min	Typ	Max	Unit	Test conditions
Allowable ripple frequency	$f_{r\ (VCC)}$	-	-	10	kHz	Figure 2.24 $V_{r\ (VCC)} \leq VCC \times 0.2$
		-	-	1	MHz	Figure 2.24 $V_{r\ (VCC)} \leq VCC \times 0.08$
		-	-	10	MHz	Figure 2.24 $V_{r\ (VCC)} \leq VCC \times 0.06$
Allowable voltage change rising and falling gradient	dt/dVCC	1.0	-	-	ms/V	When VCC change exceeds VCC ±10%

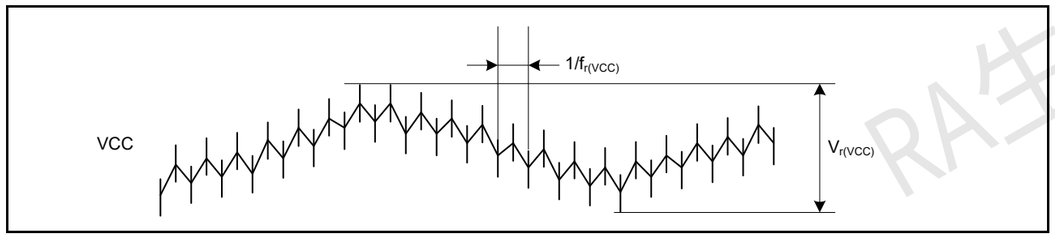

Figure 2.24 Ripple waveform

2.2.10 VCC上升和下降梯度和纹波频率

Table 2.15 上升和下降梯度特性

Conditions: VCC = AVCC0 = 0 to 5.5 V

Parameter		Symbol	Min	Typ	Max	Unit	测试条件
上电VCC上升梯度	启动时禁用电压监视器0复位（正常启动）	SrVCC	0.02	-	2	ms/V	-
	电压监视器0启动时启用复位*1		0.02	-	-		
	SCI/USB boot mode*2		0.02	-	2		

Note 1. When OFS1.LVDAS = 0.

Note 2. 在引导模式下，无论OFS1.LVDAS位的值如何，电压监视器0的复位均被禁用。

Table 2.16 上升下降梯度和纹波频率特性

Conditions: VCC = AVCC0 = VCC_USB = 1.6 to 5.5 V

纹波电压必须在VCC上限(5.5V)和下限(1.6V)之间的范围内满足允许的纹波频率fr(VCC)。当VCC变化超过VCC±10%时，必须满足允许的电压变化上升下降梯度dtdVCC。

Parameter	Symbol	Min	Typ	Max	Unit	测试条件
允许纹波频率	$f_{r\ (VCC)}$	-	-	10	kHz	Figure 2.24 $V_{r\ (VCC)} \leq VCC \times 0.2$
		-	-	1	MHz	Figure 2.24 $V_{r\ (VCC)} \leq VCC \times 0.08$
		-	-	10	MHz	Figure 2.24 $V_{r\ (VCC)} \leq VCC \times 0.06$
允许电压变化上升下降梯度	dt/dVCC	1.0	-	-	ms/V	当VCC变化超过VCC±10%

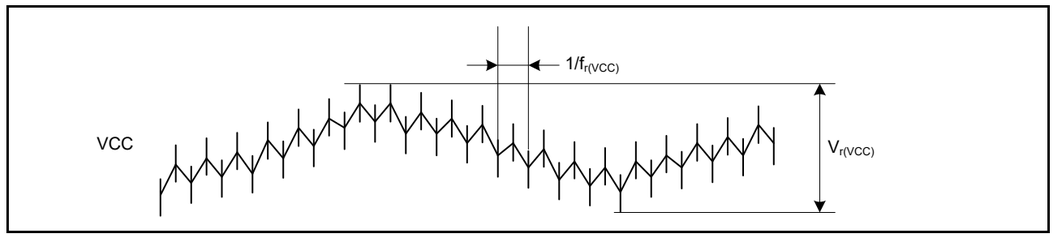

Figure 2.24 纹波波形

RA生态工作室

2.3 AC Characteristics

2.3.1 Frequency

Table 2.17 Operation frequency value in high-speed operating mode

Conditions: VCC = AVCC0 = 2.4 to 5.5 V

Parameter			Symbol	Min	Typ	Max*5	Unit
Operation frequency	System clock (ICLK)*4	2.7 to 5.5 V	f	0.032768	-	48	MHz
		2.4 to 2.7 V		0.032768	-	16	
	Flash interface clock (FCLK)*1, *2, *4	2.7 to 5.5 V		0.032768	-	32	
		2.4 to 2.7 V		0.032768	-	16	
	Peripheral module clock (PCLKA)*4	2.7 to 5.5 V		-	-	48	
		2.4 to 2.7 V		-	-	16	
	Peripheral module clock (PCLKB)*4	2.7 to 5.5 V		-	-	32	
		2.4 to 2.7 V		-	-	16	
	Peripheral module clock (PCLKC)*3, *4	2.7 to 5.5 V		-	-	64	
		2.4 to 2.7 V		-	-	16	
	Peripheral module clock (PCLKD)*4	2.7 to 5.5 V		-	-	64	
		2.4 to 2.7 V		-	-	16	

Note 1. The lower-limit frequency of FCLK is 1 MHz while programming or erasing the flash memory. When using FCLK for programming or erasing the flash memory at below 4 MHz, the frequency can be set to 1 MHz, 2 MHz, or 3 MHz. A non-integer frequency such as 1.5 MHz cannot be set.

Note 2. The frequency accuracy of FCLK must be ±3.5% while programming or erasing the flash memory. Confirm the frequency accuracy of the clock source.

Note 3. The lower-limit frequency of PCLKC is 4 MHz at 2.4 V or above and 1 MHz at below 2.4 V when the 14-bit A/D converter is in use.

Note 4. See section 8, Clock Generation Circuit in User's Manual for the relationship of frequencies between ICLK, PCLKA, PCLKB, PCLKC, PCLKD, and FCLK.

Note 5. The maximum value of operation frequency does not include internal oscillator errors. For details on the range of guaranteed operation, see Table 2.22, Clock timing.

Table 2.18 Operation frequency value in Middle-speed mode

Conditions: VCC = AVCC0 = 1.8 to 5.5 V

Parameter			Symbol	Min	Typ	Max*5	Unit
Operation frequency	System clock (ICLK)*4	2.7 to 5.5 V	f	0.032768	-	12	MHz
		2.4 to 2.7 V		0.032768	-	12	
		1.8 to 2.4 V		0.032768	-	8	
	Flash interface clock (FCLK)*1, *2, *4	2.7 to 5.5 V		0.032768	-	12	
		2.4 to 2.7 V		0.032768	-	12	
		1.8 to 2.4 V		0.032768	-	8	
	Peripheral module clock (PCLKA)*4	2.7 to 5.5 V		-	-	12	
		2.4 to 2.7 V		-	-	12	
		1.8 to 2.4 V		-	-	8	
	Peripheral module clock (PCLKB)*4	2.7 to 5.5 V		-	-	12	
		2.4 to 2.7 V		-	-	12	
		1.8 to 2.4 V		-	-	8	
	Peripheral module clock (PCLKC)*3, *4	2.7 to 5.5 V		-	-	12	
		2.4 to 2.7 V		-	-	12	
		1.8 to 2.4 V		-	-	8	
	Peripheral module clock (PCLKD)*4	2.7 to 5.5 V		-	-	12	
		2.4 to 2.7 V		-	-	12	
		1.8 to 2.4 V		-	-	8	

2.3 交流特性

2.3.1 Frequency

Table 2.17 高速运行模式下的运行频率值

Conditions: VCC = AVCC0 = 2.4 to 5.5 V

Parameter			Symbol	Min	Typ	Max*5	Unit
运行频率	系统时钟(ICLK)*4	2.7 to 5.5 V	f	0.032768	-	48	MHz
		2.4 to 2.7 V		0.032768	-	16	
	Flash接口时钟(FCLK)*1 *2 *4	2.7 to 5.5 V		0.032768	-	32	
		2.4 to 2.7 V		0.032768	-	16	
	外设模块时钟(PCLKA)*4	2.7 to 5.5 V		-	-	48	
		2.4 to 2.7 V		-	-	16	
	外设模块时钟(PCLKB)*4	2.7 to 5.5 V		-	-	32	
		2.4 to 2.7 V		-	-	16	
	外设模块时钟（PCLKC）*3 *4	2.7 to 5.5 V		-	-	64	
		2.4 to 2.7 V		-	-	16	
	外设模块时钟(PCLKD)*4	2.7 to 5.5 V		-	-	64	
		2.4 to 2.7 V		-	-	16	

Note 1. 在对闪存进行编程或擦除时，FCLK的下限频率为1MHz。当使用FCLK在4MHz以下对闪存进行编程或擦除时，频率可以设置为1MHz、2MHz或3MHz。不能设置非整数频率，例如1.5MHz。

Note 2. 在对闪存进行编程或擦除时，FCLK的频率精度必须为±3.5%。确认时钟源的频率精度。

Note 3. 使用14位AD转换器时，PCLKC的下限频率为2.4V或以上时为4MHz，低于2.4V时为1MHz。

Note 4. 关于ICLK、PCLKA、PCLKB、PCLKC, PCLKD, and FCLK.

Note 5. 工作频率的最大值不包括内部振荡器误差。有关保证操作范围的详细信息，请参见表2.22，时钟时序。

Table 2.18 中速模式运行频率值

Conditions: VCC = AVCC0 = 1.8 to 5.5 V

Parameter			Symbol	Min	Typ	Max*5	Unit
运行频率	系统时钟(ICLK)*4	2.7 to 5.5 V	f	0.032768	-	12	MHz
		2.4 to 2.7 V		0.032768	-	12	
		1.8 to 2.4 V		0.032768	-	8	
	Flash接口时钟(FCLK)*1 *2 *4	2.7 to 5.5 V		0.032768	-	12	
		2.4 to 2.7 V		0.032768	-	12	
		1.8 to 2.4 V		0.032768	-	8	
	外设模块时钟(PCLKA)*4	2.7 to 5.5 V		-	-	12	
		2.4 to 2.7 V		-	-	12	
		1.8 to 2.4 V		-	-	8	
	外设模块时钟(PCLKB)*4	2.7 to 5.5 V		-	-	12	
		2.4 to 2.7 V		-	-	12	
		1.8 to 2.4 V		-	-	8	
	外设模块时钟（PCLKC）*3 *4	2.7 to 5.5 V		-	-	12	
		2.4 to 2.7 V		-	-	12	
		1.8 to 2.4 V		-	-	8	
	外设模块时钟(PCLKD)*4	2.7 to 5.5 V		-	-	12	
		2.4 to 2.7 V		-	-	12	
		1.8 to 2.4 V		-	-	8	

RA生态工作室

Note 1. The lower-limit frequency of FCLK is 1 MHz while programming or erasing the flash memory. When using FCLK for programming or erasing the flash memory at below 4 MHz, the frequency can be set to 1 MHz, 2 MHz, or 3 MHz. A non-integer frequency such as 1.5 MHz cannot be set.
Note 2. The frequency accuracy of FCLK must be ±3.5% while programming or erasing the flash memory. Confirm the frequency accuracy of the clock source.
Note 3. The lower-limit frequency of PCLKC is 4 MHz at 2.4 V or above and 1 MHz at below 2.4 V when the 14-bit A/D converter is in use.
Note 4. See section 8, Clock Generation Circuit in User's Manual for the relationship of frequencies between ICLK, PCLKA, PCLKB, PCLKC, PCLKD, FCLK.
Note 5. The maximum value of operation frequency does not include internal oscillator errors. For details on the range of guaranteed operation, see Table 2.22, Clock timing.

Table 2.19 Operation frequency value in Low-speed mode

Conditions: VCC = AVCC0 = 1.8 to 5.5 V

Parameter			Symbol	Min	Typ	Max*4	Unit
Operation frequency	System clock (ICLK)*3	1.8 to 5.5 V	f	0.032768	-	1	MHz
	Flash interface clock (FCLK)*1, *3	1.8 to 5.5 V		0.032768	-	1	
	Peripheral module clock (PCLKA)*3	1.8 to 5.5 V		-	-	1	
	Peripheral module clock (PCLKB)*3	1.8 to 5.5 V		-	-	1	
	Peripheral module clock (PCLKC)*2, *3	1.8 to 5.5 V		-	-	1	
	Peripheral module clock (PCLKD)*3	1.8 to 5.5 V		-	-	1	

Note 1. The lower-limit frequency of FCLK is 1 MHz while programming or erasing the flash memory.
Note 2. The lower-limit frequency of PCLKC is 1 MHz when the A/D converter is in use.
Note 3. See section 8, Clock Generation Circuit in User's Manual for the relationship of frequencies between ICLK, PCLKA, PCLKB, PCLKC, PCLKD, FCLK.
Note 4. The maximum value of operation frequency does not include internal oscillator errors. For details on the range of guaranteed operation, see Table 2.22, Clock timing.

Table 2.20 Operation frequency value in low-voltage mode

Conditions: VCC = AVCC0 = 1.6 to 5.5 V

Parameter			Symbol	Min	Typ	Max*5	Unit
Operation frequency	System clock (ICLK)*4	1.6 to 5.5 V	f	0.032768	-	4	MHz
	Flash interface clock (FCLK)*1, *2, *4	1.6 to 5.5 V		0.032768	-	4	
	Peripheral module clock (PCLKA)*4	1.6 to 5.5 V		-	-	4	
	Peripheral module clock (PCLKB)*4	1.6 to 5.5 V		-	-	4	
	Peripheral module clock (PCLKC)*3, *4	1.6 to 5.5 V		-	-	4	
	Peripheral module clock (PCLKD)*4	1.6 to 5.5 V		-	-	4	

Note 1. The lower-limit frequency of FCLK is 1 MHz while programming or erasing the flash memory. When using FCLK for programming or erasing the flash memory at below 4 MHz, the frequency can be set to 1 MHz, 2 MHz, or 3 MHz. A non-integer frequency such as 1.5 MHz cannot be set.
Note 2. The frequency accuracy of FCLK must be ±3.5% while programming or erasing the flash memory. Confirm the frequency accuracy of the clock source.
Note 3. The lower-limit frequency of PCLKC is 4 MHz at 2.4 V or above and 1 MHz at below 2.4 V when the 14-Bit A/D converter is in use.
Note 4. See section 8, Clock Generation Circuit in User's Manual for the relationship of frequencies between ICLK, PCLKA, PCLKB, PCLKC, PCLKD, FCLK.
Note 5. The maximum value of operation frequency does not include internal oscillator errors. For details on the range of guaranteed operation, see Table 2.22, Clock timing.

Note 1. 在对闪存进行编程或擦除时，FCLK的下限频率为1MHz。当使用FCLK在4MHz以下对闪存进行编程或擦除时，频率可以设置为1 MHz、2MHz或3MHz。不能设置非整数频率，例如1.5MHz。

Note 2. 在对闪存进行编程或擦除时，FCLK的频率精度必须为±3.5%。确认时钟源的频率精度。

Note 3. 使用14位AD转换器时，PCLKC的下限频率为2.4V或以上时为4MHz，低于2.4V时为1MHz。
Note 4. 关于ICLK、PCLKA、PCLKB、
PCLKC, PCLKD, FCLK.
Note 5. 工作频率的最大值不包括内部振荡器误差。有关保证操作范围的详细信息，请参见表2.22，时钟时序。

Table 2.19 低速模式下的运行频率值

Conditions: VCC = AVCC0 = 1.8 to 5.5 V

Parameter			Symbol	Min	Typ	Max*4	Unit
运行频率	系统时钟(ICLK)*3	1.8 to 5.5 V	f	0.032768	-	1	MHz
	Flash接口时钟(FCLK)*1 *3	1.8 to 5.5 V		0.032768	-	1	
	外设模块时钟(PCLKA)*3	1.8 to 5.5 V		-	-	1	
	外设模块时钟(PCLKB)*3	1.8 to 5.5 V		-	-	1	
	外设模块时钟（PCLKC）*2 *3	1.8 to 5.5 V		-	-	1	
	外设模块时钟(PCLKD)*3	1.8 to 5.5 V		-	-	1	

Note 1. 在对闪存进行编程或擦除时，FCLK的下限频率为1MHz。
Note 2. 使用AD转换器时，PCLKC的下限频率为1MHz。
Note 3. 关于ICLK、PCLKA、PCLKB、
PCLKC, PCLKD, FCLK.
Note 4. 工作频率的最大值不包括内部振荡器误差。有关保证操作范围的详细信息，请参见表2.22，时钟时序。

Table 2.20 低压模式下的工作频率值

Conditions: VCC = AVCC0 = 1.6 to 5.5 V

Parameter			Symbol	Min	Typ	Max*5	Unit
运行频率	系统时钟(ICLK)*4	1.6 to 5.5 V	f	0.032768	-	4	MHz
	Flash接口时钟(FCLK)*1 *2 *4	1.6 to 5.5 V		0.032768	-	4	
	外设模块时钟(PCLKA)*4	1.6 to 5.5 V		-	-	4	
	外设模块时钟(PCLKB)*4	1.6 to 5.5 V		-	-	4	
	外设模块时钟（PCLKC）*3 *4	1.6 to 5.5 V		-	-	4	
	外设模块时钟(PCLKD)*4	1.6 to 5.5 V		-	-	4	

Note 1. 在对闪存进行编程或擦除时，FCLK的下限频率为1MHz。当使用FCLK在4MHz以下对闪存进行编程或擦除时，频率可以设置为1 MHz、2MHz或3MHz。不能设置非整数频率，例如1.5MHz。

Note 2. 在对闪存进行编程或擦除时，FCLK的频率精度必须为±3.5%。确认时钟源的频率精度。

Note 3. 使用14位AD转换器时，PCLKC的下限频率为2.4V或以上时为4MHz，低于2.4V时为1MHz。

Note 4. 关于ICLK、PCLKA、PCLKB、
PCLKC, PCLKD, FCLK.
Note 5. 工作频率的最大值不包括内部振荡器误差。有关保证操作范围的详细信息，请参见表2.22，时钟时序。

RA生态工作室

Table 2.21 Operation frequency value in Subosc-speed mode

Conditions: VCC = AVCC0 = 1.8 to 5.5 V

Parameter			Symbol	Min	Typ	Max	Unit
Operation frequency	System clock (ICLK)*3	1.8 to 5.5 V	f	27.8528	32.768	37.6832	kHz
	Flash interface clock (FCLK)*1, *3	1.8 to 5.5 V		27.8528	32.768	37.6832	
	Peripheral module clock (PCLKA)*3	1.8 to 5.5 V		-	-	37.6832	
	Peripheral module clock (PCLKB)*3	1.8 to 5.5 V		-	-	37.6832	
	Peripheral module clock (PCLKC)*2, *3	1.8 to 5.5 V		-	-	37.6832	
	Peripheral module clock (PCLKD)*3	1.8 to 5.5 V		-	-	37.6832	

Note 1. Programming and erasing the flash memory is not possible.
Note 2. The 14-bit A/D converter cannot be used.
Note 3. See section 8, Clock Generation Circuit in User's Manual for the relationship of frequencies between ICLK, PCLKA, PCLKB, PCLKC, PCLKD, FCLK.

2.3.2 Clock Timing

Table 2.22 Clock timing (1 of 2)

Parameter	Symbol	Min	Typ	Max	Unit	Test conditions
EXTAL external clock input cycle time	t_{Xcyc}	50	-	-	ns	Figure 2.25
EXTAL external clock input high pulse width	t_{XH}	20	-	-	ns	
EXTAL external clock input low pulse width	t_{XL}	20	-	-	ns	
EXTAL external clock rising time	t_{Xr}	-	-	5	ns	
EXTAL external clock falling time	t_{Xf}	-	-	5	ns	
EXTAL external clock input wait time*1	t_{EXWT}	0.3	-	-	μs	-
EXTAL external clock input frequency	f_{EXTAL}	-	-	20	MHz	2.4 ≤ VCC ≤ 5.5
		-	-	8		1.8 ≤ VCC < 2.4
		-	-	1		1.6 ≤ VCC < 1.8
Main clock oscillator oscillation frequency	f_{MAIN}	1	-	20	MHz	2.4 ≤ VCC ≤ 5.5
		1	-	8		1.8 ≤ VCC < 2.4
		1	-	4		1.6 ≤ VCC < 1.8
Main clock oscillation stabilization wait time (crystal)*9	$t_{MAINOSCWT}$	-	-	-*9	ms	-
LOCO clock oscillation frequency	f_{LOCO}	27.8528	32.768	37.6832	kHz	-
LOCO clock oscillation stabilization time	t_{LOCO}	-	-	100	μs	Figure 2.26
IWDT-dedicated clock oscillation frequency	f_{ILOCO}	12.75	15	17.25	kHz	-
MOCO clock oscillation frequency	f_{MOCO}	6.8	8	9.2	MHz	-
MOCO clock oscillation stabilization time	t_{MOCO}	-	-	1	μs	-

Table 2.21 Subosc-speed模式下的运行频率值

Conditions: VCC = AVCC0 = 1.8 to 5.5 V

Parameter			Symbol	Min	Typ	Max	Unit
运行频率	系统时钟(ICLK)*3	1.8 to 5.5 V	f	27.8528	32.768	37.6832	kHz
	Flash接口时钟(FCLK)*1 *3	1.8 to 5.5 V		27.8528	32.768	37.6832	
	外设模块时钟(PCLKA)*3	1.8 to 5.5 V		-	-	37.6832	
	外设模块时钟(PCLKB)*3	1.8 to 5.5 V		-	-	37.6832	
	外设模块时钟（PCLKC）*2 *3	1.8 to 5.5 V		-	-	37.6832	
	外设模块时钟(PCLKD)*3	1.8 to 5.5 V		-	-	37.6832	

Note 1. 无法对闪存进行编程和擦除。
Note 2. 不能使用14位AD转换器。
Note 3. 关于ICLK、PCLKA、PCLKB、PCLKC, PCLKD, FCLK.

2.3.2 时钟时序

Table 2.22 时钟计时(1of2)

Parameter	Symbol	Min	Typ	Max	Unit	测试条件
EXTAL外部时钟输入周期时间	t_{Xcyc}	50	-	-	ns	Figure 2.25
EXTAL外部时钟输入高脉冲宽度	t_{XH}	20	-	-	ns	
EXTAL外部时钟输入低脉冲宽度	t_{XL}	20	-	-	ns	
EXTAL外部时钟上升时间	t_{Xr}	-	-	5	ns	
EXTAL外部时钟下降时间	t_{Xf}	-	-	5	ns	
EXTAL外部时钟输入等待时间*1	t_{EXWT}	0.3	-	-	μs	-
EXTAL外部时钟输入频率	f_{EXTAL}	-	-	20	MHz	2.4 ≤ VCC ≤ 5.5
		-	-	8		1.8 ≤ VCC < 2.4
		-	-	1		1.6 ≤ VCC < 1.8
主时钟振荡器振荡频率	f_{MAIN}	1	-	20	MHz	2.4 ≤ VCC ≤ 5.5
		1	-	8		1.8 ≤ VCC < 2.4
		1	-	4		1.6 ≤ VCC < 1.8
主时钟振荡稳定等待时间（晶体）*9	$t_{MAINOSCWT}$	-	-	-*9	ms	-
LOCO时钟振荡频率	f_{LOCO}	27.8528	32.768	37.6832	kHz	-
LOCO时钟振荡稳定时间	t_{LOCO}	-	-	100	μs	Figure 2.26
IWDT专用时钟振荡频率	f_{ILOCO}	12.75	15	17.25	kHz	-
MOCO时钟振荡频率	f_{MOCO}	6.8	8	9.2	MHz	-
MOCO时钟振荡稳定时间	t_{MOCO}	-	-	1	μs	-

RA生态工作室

Table 2.22 Clock timing (2 of 2)

Parameter		Symbol	Min	Typ	Max	Unit	Test conditions
HOCO clock oscillation frequency		f_{HOCO24}	23.64	24	24.36	MHz	T_a = -40 to -20°C 1.8 ≤ VCC ≤ 5.5
			22.68	24	25.32		T_a = -40 to 85°C 1.6 ≤ VCC < 1.8
			23.76	24	24.24		T_a = -20 to 85°C 1.8 ≤ VCC ≤ 5.5
			23.52	24	24.48		T_a = 85 to 105°C 2.4 ≤ VCC ≤ 5.5
		f_{HOCO32}	31.52	32	32.48		T_a = -40 to -20°C 1.8 ≤ VCC ≤ 5.5
			30.24	32	33.76		T_a = -40 to 85°C 1.6 ≤ VCC < 1.8
			31.68	32	32.32		T_a = -20 to 85°C 1.8 ≤ VCC ≤ 5.5
			31.36	32	32.64		T_a = 85 to 105°C 2.4 ≤ VCC ≤ 5.5
		f_{HOCO48}*4	47.28	48	48.72		T_a = -40 to -20°C 1.8 ≤ VCC ≤ 5.5
			47.52	48	48.48		T_a = -20 to 85°C 1.8 ≤ VCC ≤ 5.5
			47.04	48	48.96		T_a = 85 to 105°C 2.4 ≤ VCC ≤ 5.5
		f_{HOCO64}*5	63.04	64	64.96		T_a = -40 to -20°C 2.4 ≤ VCC ≤ 5.5
			63.36	64	64.64		T_a = -20 to 85°C 2.4 ≤ VCC ≤ 5.5
			62.72	64	65.28		T_a = 85 to 105°C 2.4 ≤ VCC ≤ 5.5
HOCO clock oscillation stabilization time*6, *7	Except Low-Voltage mode	t_{HOCO24} t_{HOCO32}	-	-	37.1	μs	Figure 2.27
		t_{HOCO48}	-	-	43.3		
		t_{HOCO64}	-	-	80.6		
	Low-Voltage mode	t_{HOCO24} t_{HOCO32} t_{HOCO48} t_{HOCO64}	-	-	100.9		
PLL input frequency*2		f_{PLLIN}	4	-	12.5	MHz	-
PLL circuit oscillation frequency*2		f_{PLL}	24	-	64	MHz	-
PLL clock oscillation stabilization time*8		t_{PLL}	-	-	55.5	μs	Figure 2.29
PLL free-running oscillation frequency		f_{PLLFR}	-	8	-	MHz	-
Sub-clock oscillator oscillation frequency		f_{SUB}	-	32.768	-	kHz	-
Sub-clock oscillation stabilization time*3		t_{SUBOSC}	-	-	-*3	s	Figure 2.30

Note 1. Time until the clock can be used after the Main Clock Oscillator Stop bit (MOSCCR.MOSTP) is set to 0 (operating) when the external clock is stable.
Note 2. The VCC range that the PLL can be used is 2.4 to 5.5 V.
Note 3. After changing the setting of the SOSCCR.SOSTP bit so that the sub-clock oscillator operates, only start using the sub-clock after the sub-clock oscillation stabilization wait time elapses, that is greater than or equal to the value recommended by the oscillator manufacturer.
Note 4. The 48-MHz HOCO can be used within a VCC range of 1.8 V to 5.5 V.
Note 5. The 64-MHz HOCO can be used within a VCC range of 2.4 V to 5.5 V.
Note 6. This is a characteristic when HOCOCR.HCSTP bit is set to 0 (oscillation) in MOCO stop state.
When HOCOCR.HCSTP bit is set to 0 (oscillation) during MOCO oscillation, this specification is shortened by 1 μs.
Note 7. Whether stabilization time has elapsed can be confirmed by OSCSF.HOCOSF.
Note 8. This is a characteristic when PLLCR.PLLSTP bit is set to 0 (operation) in MOCO stop state.
When PLLCR.PLLSTP bit is set to 0 (operation) during MOCO oscillation, this specification is shortened by 1 μs.
Note 9. When setting up the main clock, ask the oscillator manufacturer for an oscillation evaluation and use the results as the recommended oscillation stabilization time. Set the MOSCWTCR register to a value equal to or greater than the recommended stabilization time. After changing the setting of the MOSCCR.MOSTP bit so that the main clock oscillator operates, read the OSCSF.MOSCSF flag to confirm that it is 1, then start using the main clock.

Table 2.22 时钟计时（2个中的2个）

Parameter		Symbol	Min	Typ	Max	Unit	测试条件
HOCO时钟振荡频率		f_{HOCO24}	23.64	24	24.36	MHz	T_a = -40 to -20°C 1.8 ≤ VCC ≤ 5.5
			22.68	24	25.32		T_a = -40 to 85°C 1.6 ≤ VCC < 1.8
			23.76	24	24.24		T_a = -20 to 85°C 1.8 ≤ VCC ≤ 5.5
			23.52	24	24.48		T_a = 85 to 105°C 2.4 ≤ VCC ≤ 5.5
		f_{HOCO32}	31.52	32	32.48		T_a = -40 to -20°C 1.8 ≤ VCC ≤ 5.5
			30.24	32	33.76		T_a = -40 to 85°C 1.6 ≤ VCC < 1.8
			31.68	32	32.32		T_a = -20 to 85°C 1.8 ≤ VCC ≤ 5.5
			31.36	32	32.64		T_a = 85 to 105°C 2.4 ≤ VCC ≤ 5.5
		f_{HOCO48}*4	47.28	48	48.72		T_a = -40 to -20°C 1.8 ≤ VCC ≤ 5.5
			47.52	48	48.48		T_a = -20 to 85°C 1.8 ≤ VCC ≤ 5.5
			47.04	48	48.96		T_a = 85 to 105°C 2.4 ≤ VCC ≤ 5.5
		f_{HOCO64}*5	63.04	64	64.96		T_a = -40 to -20°C 2.4 ≤ VCC ≤ 5.5
			63.36	64	64.64		T_a = -20 to 85°C 2.4 ≤ VCC ≤ 5.5
			62.72	64	65.28		T_a = 85 to 105°C 2.4 ≤ VCC ≤ 5.5
HOCO时钟振荡稳定时间*6、*7	低压模式除外	t_{HOCO24} t_{HOCO32}	-	-	37.1	μs	Figure 2.27
		t_{HOCO48}	-	-	43.3		
		t_{HOCO64}	-	-	80.6		
	Low-Voltage mode	t_{HOCO24} t_{HOCO32} t_{HOCO48} t_{HOCO64}	-	-	100.9		
PLL input frequency*2		f_{PLLIN}	4	-	12.5	MHz	-
PLL电路振荡频率*2		f_{PLL}	24	-	64	MHz	-
PLL时钟振荡稳定时间*8		t_{PLL}	-	-	55.5	μs	Figure 2.29
PLL自由振荡频率		f_{PLLFR}	-	8	-	MHz	-
副时钟振荡器振荡频率		f_{SUB}	-	32.768	-	kHz	-
副时钟振荡稳定时间*3		t_{SUBOSC}	-	-	-*3	s	Figure 2.30

Note 1. 当外部时钟稳定时，主时钟振荡器停止位(MOSCCR.MOSTP)设置为0（运行）后，时钟可以使用的时间。

Note 2. PLL可以使用的VCC范围是2.4到5.5V。
Note 3. 更改SOSCCR.SOSTP位的设置使副时钟振荡器工作后，仅在副时钟振荡稳定等待时间过去后才开始使用副时钟，即大于或等于振荡器推荐的值制造商。

Note 4. 48MHzHOCO可在1.8V至5.5V的VCC范围内使用。
Note 5. 64MHzHOCO可在2.4V至5.5V的VCC范围内使用。
Note 6. 这是在MOCO停止状态下将HOCOCR.HCSTP位设置为0（振荡）时的特性。
在MOCO振荡期间，当HOCOCR.HCSTP位设置为0（振荡）时，该规范将缩短1μs。
Note 7. OSCSF.HOCOSF可以确认稳定时间是否已过。
Note 8. 这是在MOCO停止状态下将PLLCR.PLLSTP位设置为0（操作）时的特性。
在MOCO振荡期间，当PLLCR.PLLSTP位设置为0（操作）时，该规范缩短1μs。
Note 9. 设置主时钟时，请向振荡器制造商索取振荡评估，并将结果作为推荐的振荡稳定时间。将MOSCWTCR寄存器设置为等于或大于建议的稳定时间的值。更改MOSCCR.MOSTP位的设置以使主时钟振荡器工作后，读取OSCSF.MOSCSF标志以确认其为1，然后开始使用主时钟。

RA生态工作室

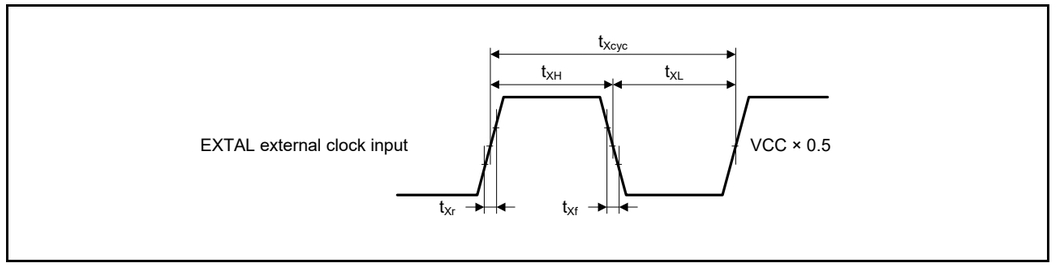

Figure 2.25 EXTAL external clock input timing

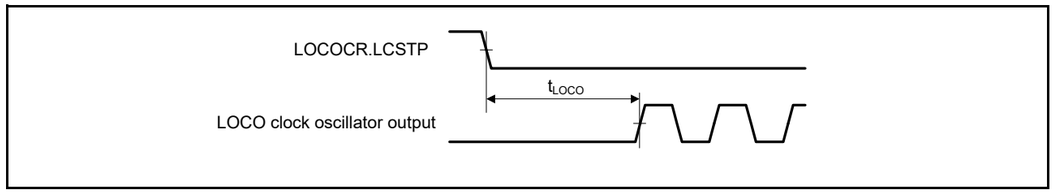

Figure 2.26 LOCO clock oscillation start timing

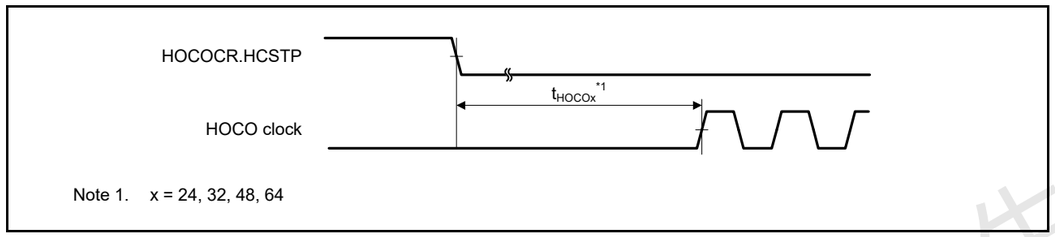

Figure 2.27 HOCO clock oscillation start timing (started by setting HOCOCR.HCSTP bit)

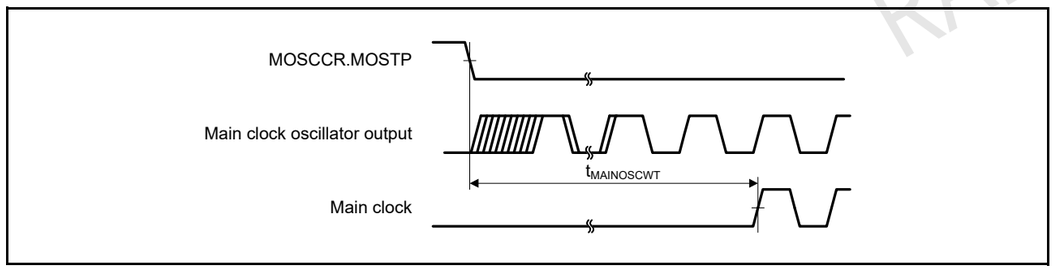

Figure 2.28 Main clock oscillation start timing

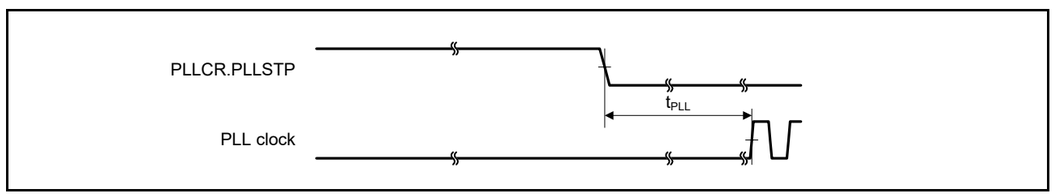

Figure 2.29 PLL clock oscillation start timing (PLL is operated after main clock oscillation has settled)

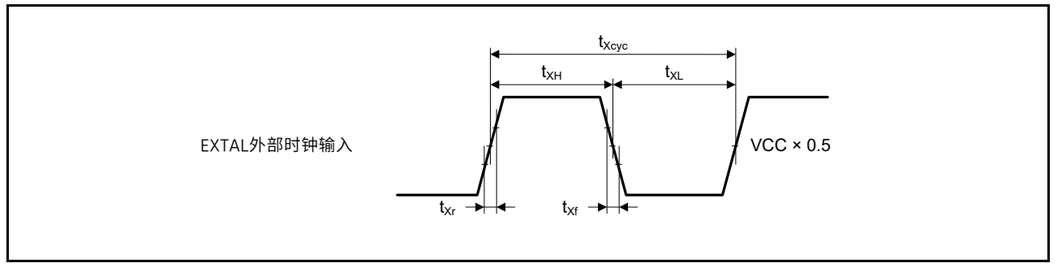

Figure 2.25 EXTAL外部时钟输入时序

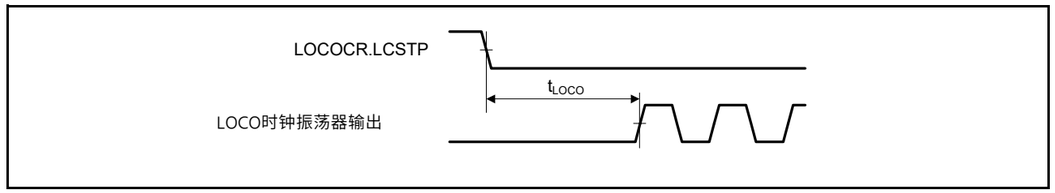

Figure 2.26 LOCO时钟振荡开始时序

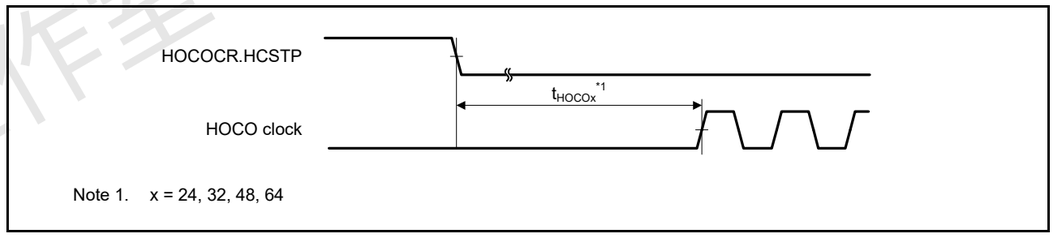

Figure 2.27 HOCO时钟振荡开始时序（通过设置HOCOCR.HCSTP位开始）

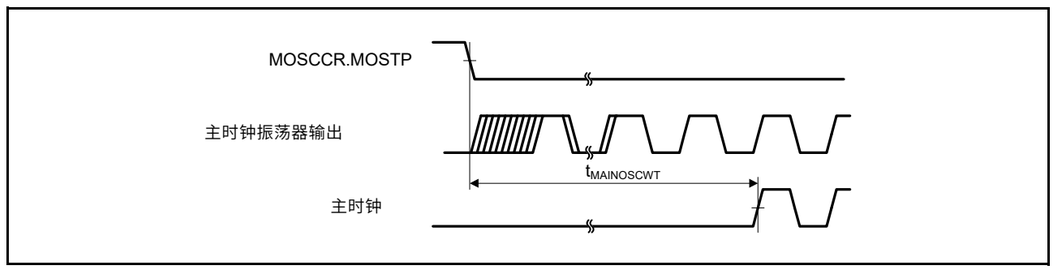

Figure 2.28 主时钟振荡开始时序

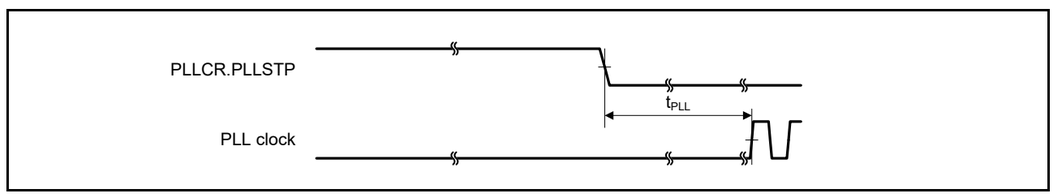

Figure 2.29 PLL时钟振荡开始时序（PLL在主时钟振荡稳定后运行）

RA生态工作室

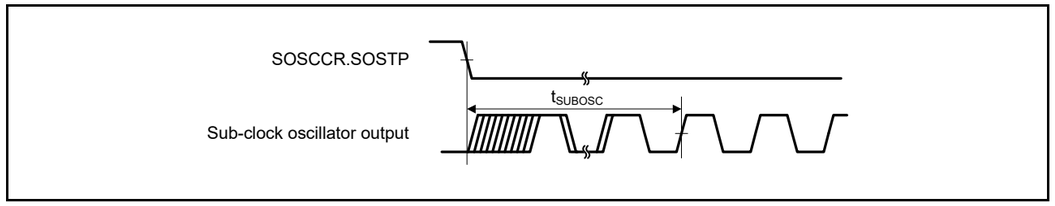

Figure 2.30 Sub-clock oscillation start timing

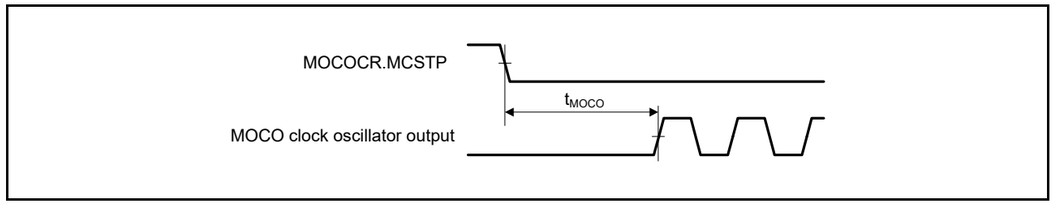

Figure 2.31 MOCO clock oscillation start timing

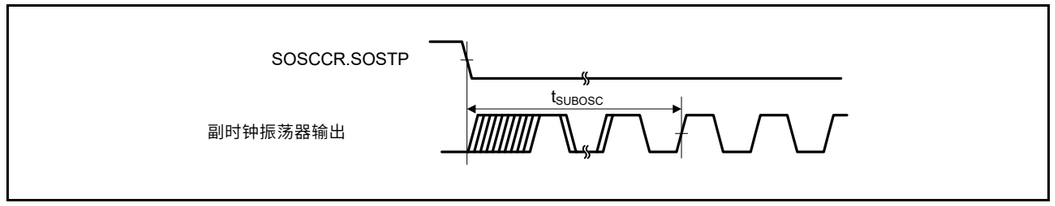

Figure 2.30 副时钟振荡开始时序

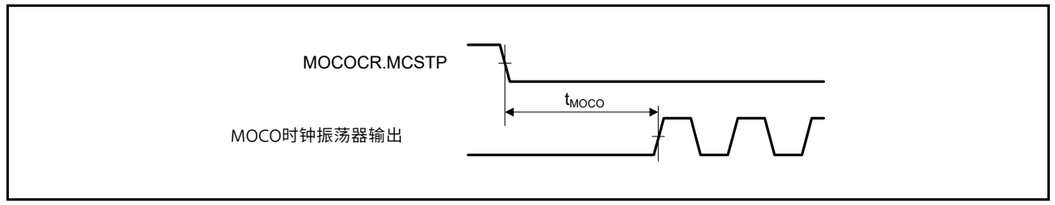

Figure 2.31 MOCO时钟振荡开始时序

RA生态工作室

2.3.3 Reset Timing

Table 2.23 Reset timing

Parameter		Symbol	Min	Typ	Max	Unit	Test conditions
RES pulse width	At power-on	t_{RESWP}	3	-	-	ms	Figure 2.32
	Other than above	t_{RESW}	30	-	-	μs	Figure 2.33
Wait time after RES cancellation (at power-on)	LVD0: enable*1	t_{RESWT}	-	0.7	-	ms	Figure 2.32
	LVD0: disable*2		-	0.3	-		
Wait time after RES cancellation (during powered-on state)	LVD0: enable*1	t_{RESWT2}	-	0.5	-	ms	Figure 2.33
	LVD0: disable*2		-	0.05	-		
Internal reset cancellation time (Watchdog timer reset, SRAM parity error reset, SRAM ECC error reset, Bus master MPU error reset, Bus slave MPU error reset, Stack pointer error reset, Software reset)	LVD0: enable*1	t_{RESWT3}	-	0.6	-	ms	-
	LVD0: disable*2		-	0.15	-		

Note 1. When OFS1.LVDAS = 0.
Note 2. When OFS1.LVDAS = 1.

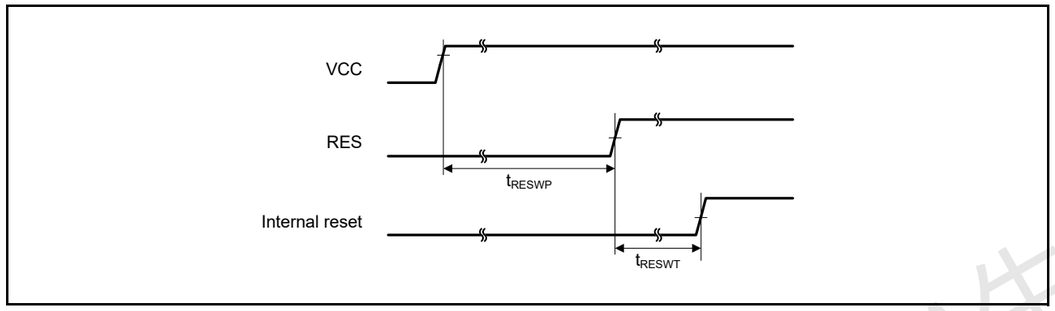

Figure 2.32 Reset input timing at power-on

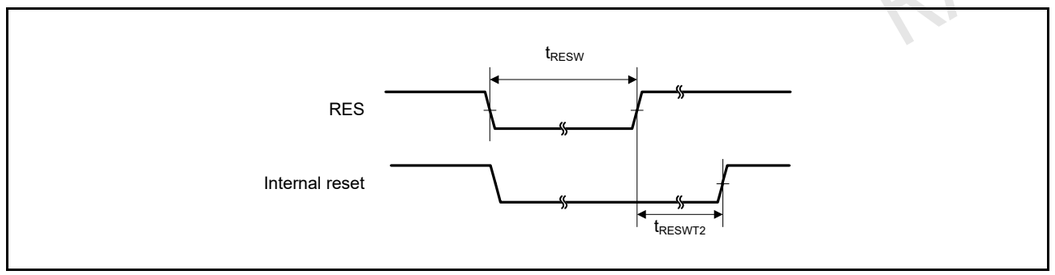

Figure 2.33 Reset input timing

2.3.3 重置时间

Table 2.23 重置时间

Parameter		Symbol	Min	Typ	Max	Unit	测试条件
RES脉冲宽度	At power-on	t_{RESWP}	3	-	-	ms	Figure 2.32
	上述以外	t_{RESW}	30	-	-	μs	Figure 2.33
RES取消后的等待时间（上电时）	LVD0: enable*1	t_{RESWT}	-	0.7	-	ms	Figure 2.32
	LVD0: disable*2		-	0.3	-		
RES取消后的等待时间（开机状态下）	LVD0: enable*1	t_{RESWT2}	-	0.5	-	ms	Figure 2.33
	LVD0: disable*2		-	0.05	-		
内部复位取消时间（看门狗定时器复位、SRAM奇偶校验错误复位、SRAMECC错误复位、总线主控MPU错误复位、总线从属MPU错误复位、堆栈指针错误复位、软件复位）	LVD0: enable*1	t_{RESWT3}	-	0.6	-	ms	-
	LVD0: disable*2		-	0.15	-		

Note 1. When OFS1.LVDAS = 0.
Note 2. When OFS1.LVDAS = 1.

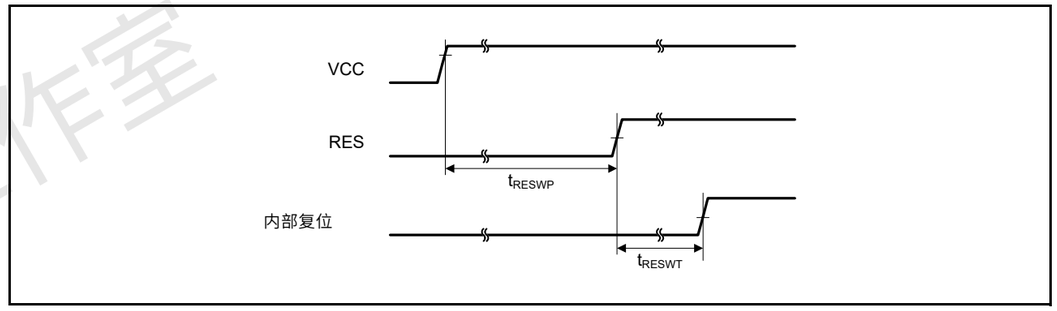

Figure 2.32 上电时复位输入时序

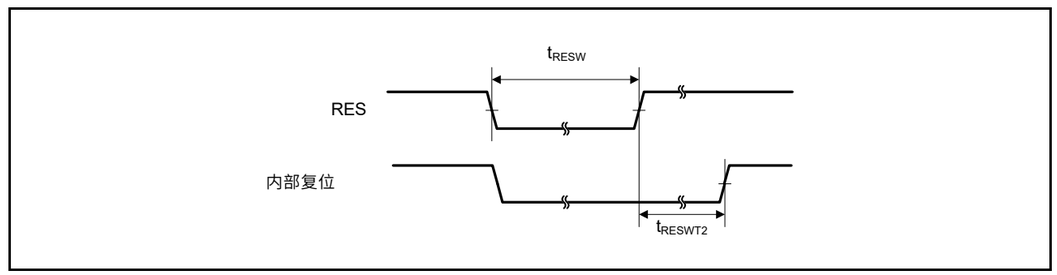

Figure 2.33 复位输入时序

RA生态工作室

2.3.4 Wakeup Time

Table 2.24 Timing of recovery from low power modes (1)

Parameter				Symbol	Min	Typ	Max	Unit	Test conditions
Recovery time from Software Standby mode*1	High-speed mode	Crystal resonator connected to main clock oscillator	System clock source is main clock oscillator (20 MHz)*2	t_{SBYMC}	-	2	3	ms	Figure 2.34
			System clock source is PLL (48 MHz) with main clock oscillator*2	t_{SBYPC}	-	2	3	ms	
		External clock input to main clock oscillator	System clock source is main clock oscillator (20 MHz)*3	t_{SBYEX}	-	14	25	μs	
			System clock source is PLL (48 MHz) with main clock oscillator*3	t_{SBYPE}	-	53	76	μs	
		System clock source is HOCO*4 (HOCO clock is 32 MHz)		t_{SBYHO}	-	43	52	μs	
		System clock source is HOCO*4 (HOCO clock is 48 MHz)		t_{SBYHO}	-	44	52	μs	
		System clock source is HOCO*5 (HOCO clock is 64 MHz)		t_{SBYHO}	-	82	110	μs	
		System clock source is MOCO		t_{SBYMO}	-	16	25	μs	

Note 1. The division ratio of ICK, FCK, and PCKx is the minimum division ratio within the allowable frequency range. The recovery time is determined by the system clock source.
Note 2. The Main Clock Oscillator Wait Control Register (MOSCWTCR) is set to 05h.
Note 3. The Main Clock Oscillator Wait Control Register (MOSCWTCR) is set to 00h.
Note 4. The HOCO Clock Wait Control Register (HOCOWTCR) is set to 05h.
Note 5. The HOCO Clock Wait Control Register (HOCOWTCR) is set to 06h.

Table 2.25 Timing of recovery from low power modes (2)

Parameter				Symbol	Min	Typ	Max	Unit	Test conditions
Recovery time from Software Standby mode*1	Middle-speed mode	Crystal resonator connected to main clock oscillator	System clock source is main clock oscillator (12 MHz)*2	t_{SBYMC}	-	2	3	ms	Figure 2.34
			System clock source is PLL (24 MHz) with main clock oscillator*2	t_{SBYPC}	-	2	3	ms	
		External clock input to main clock oscillator	System clock source is main clock oscillator (12 MHz)*3	t_{SBYEX}	-	2.9	10	μs	
			System clock source is PLL (24 MHz) with main clock oscillator*3	t_{SBYPE}	-	49	76	μs	
		System clock source is HOCO (24 MHz)		t_{SBYHO}	-	38	50	μs	
		System clock source is MOCO		t_{SBYMO}	-	3.5	5.5	μs	

Note 1. The division ratio of ICK, FCK, and PCKx is the minimum division ratio within the allowable frequency range. The recovery time is determined by the system clock source.
Note 2. The Main Clock Oscillator Wait Control Register (MOSCWTCR) is set to 05h.
Note 3. The Main Clock Oscillator Wait Control Register (MOSCWTCR) is set to 00h.

2.3.4 唤醒时间

Table 2.24 从低功耗模式恢复的时间(1)

Parameter				Symbol	Min	Typ	Max	Unit	测试条件
从软件待机模式恢复时间*1	High-speed mode	连接到主时钟振荡器的晶体谐振器	系统时钟源是主时钟振荡器（20MHz）*2	t_{SBYMC}	-	2	3	ms	Figure 2.34
			系统时钟源是带有主时钟振荡器的PLL(48MHz)*2	t_{SBYPC}	-	2	3	ms	
		主时钟振荡器的外部时钟输入	系统时钟源是主时钟振荡器（20MHz）*3	t_{SBYEX}	-	14	25	μs	
			系统时钟源是带有主时钟振荡器的PLL(48MHz)*3	t_{SBYPE}	-	53	76	μs	
		系统时钟源为HOCO*4（HOCO时钟为32MHz）		t_{SBYHO}	-	43	52	μs	
		系统时钟源为HOCO*4（HOCO时钟为48MHz）		t_{SBYHO}	-	44	52	μs	
		系统时钟源为HOCO*5（HOCO时钟为64MHz）		t_{SBYHO}	-	82	110	μs	
		系统时钟源为MOCO		t_{SBYMO}	-	16	25	μs	

Note 1. ICK、FCK、PCKx的分频比是允许频率范围内的最小分频比。恢复时间由系统时钟源决定。

Note 2. 主时钟振荡器等待控制寄存器(MOSCWTCR)设置为05h。
Note 3. 主时钟振荡器等待控制寄存器(MOSCWTCR)设置为00h。
Note 4. HOCO时钟等待控制寄存器(HOCOWTCR)设置为05h。
Note 5. HOCO时钟等待控制寄存器(HOCOWTCR)设置为06h。

Table 2.25 从低功耗模式恢复的时间(2)

Parameter				Symbol	Min	Typ	Max	Unit	测试条件
从软件待机模式恢复时间*1	Middle-speed mode	连接到主时钟振荡器的晶体谐振器	系统时钟源为主时钟振荡器(12MHz)*2	t_{SBYMC}	-	2	3	ms	Figure 2.34
			系统时钟源是PLL(24MHz)，带有主时钟振荡器*2	t_{SBYPC}	-	2	3	ms	
		主时钟振荡器的外部时钟输入	系统时钟源为主时钟振荡器(12MHz)*3	t_{SBYEX}	-	2.9	10	μs	
			系统时钟源是PLL(24MHz)，带有主时钟振荡器*3	t_{SBYPE}	-	49	76	μs	
		系统时钟源是HOCO(24MHz)		t_{SBYHO}	-	38	50	μs	
		系统时钟源为MOCO		t_{SBYMO}	-	3.5	5.5	μs	

Note 1. ICK、FCK、PCKx的分频比是允许频率范围内的最小分频比。恢复时间由系统时钟源决定。

Note 2. 主时钟振荡器等待控制寄存器(MOSCWTCR)设置为05h。
Note 3. 主时钟振荡器等待控制寄存器(MOSCWTCR)设置为00h。

RA生态工作室

Table 2.26 Timing of recovery from low power modes (3)

Parameter				Symbol	Min	Typ	Max	Unit	Test conditions
Recovery time from Software Standby mode*1	Low-speed mode	Crystal resonator connected to main clock oscillator	System clock source is main clock oscillator (1 MHz)*2	t_{SBYMC}	-	2	3	ms	Figure 2.34
		External clock input to main clock oscillator	System clock source is main clock oscillator (1 MHz)*3	t_{SBYEX}	-	28	50	μs	
		System clock source is MOCO		t_{SBYMO}	-	25	35	μs	

Note 1. The division ratio of ICK, FCK, and PCKx is the minimum division ratio within the allowable frequency range. The recovery time is determined by the system clock source.
Note 2. The Main Clock Oscillator Wait Control Register (MOSCWTCR) is set to 05h.
Note 3. The Main Clock Oscillator Wait Control Register (MOSCWTCR) is set to 00h.

Table 2.27 Timing of recovery from low power modes (4)

Parameter				Symbol	Min	Typ	Max	Unit	Test conditions
Recovery time from Software Standby mode*1	Low-voltage mode	Crystal resonator connected to main clock oscillator	System clock source is main clock oscillator (4 MHz)*2	t_{SBYMC}	-	2	3	ms	Figure 2.34
		External clock input to main clock oscillator	System clock source is main clock oscillator (4 MHz)*3	t_{SBYEX}	-	108	130	μs	
		System clock source is HOCO		t_{SBYHO}	-	108	130	μs	

Note 1. The division ratio of ICK, FCK, and PCKx is the minimum division ratio within the allowable frequency range. The recovery time is determined by the system clock source. When multiple oscillators are active, the recovery time can be determined by the following expression.
Note 2. The Main Clock Oscillator Wait Control Register (MOSCWTCR) is set to 05h.
Note 3. The Main Clock Oscillator Wait Control Register (MOSCWTCR) is set to 00h.

Table 2.28 Timing of recovery from low power modes (5)

Parameter			Symbol	Min	Typ	Max	Unit	Test conditions
Recovery time from Software Standby mode*1	Subosc-speed mode	System clock source is sub-clock oscillator (32.768 kHz)	t_{SBYSC}	-	0.85	1	ms	Figure 2.34
		System clock source is LOCO (32.768 kHz)	t_{SBYLO}	-	0.85	1.2	ms	

Note 1. The sub-clock oscillator or LOCO itself continues to oscillate in Software Standby mode during Subosc-speed mode.

Table 2.26 从低功耗模式恢复的时间(3)

Parameter				Symbol	Min	Typ	Max	Unit	测试条件
从软件待机模式恢复时间*1	Low-speed mode	连接到主时钟振荡器的晶体谐振器	系统时钟源为主时钟振荡器(1MHz)*2	t_{SBYMC}	-	2	3	ms	Figure 2.34
		主时钟振荡器的外部时钟输入	系统时钟源为主时钟振荡器(1MHz)*3	t_{SBYEX}	-	28	50	μs	
		系统时钟源为MOCO		t_{SBYMO}	-	25	35	μs	

Note 1. ICK、FCK、PCKx的分频比是允许频率范围内的最小分频比。恢复时间由系统时钟源决定。

Note 2. 主时钟振荡器等待控制寄存器(MOSCWTCR)设置为05h。
Note 3. 主时钟振荡器等待控制寄存器(MOSCWTCR)设置为00h。

Table 2.27 从低功耗模式恢复的时间(4)

Parameter				Symbol	Min	Typ	Max	Unit	测试条件
从软件待机模式恢复时间*1	Low-voltage mode	连接到主时钟振荡器的晶体谐振器	系统时钟源是主时钟振荡器（4MHz）*2	t_{SBYMC}	-	2	3	ms	Figure 2.34
		主时钟振荡器的外部时钟输入	系统时钟源是主时钟振荡器（4MHz）*3	t_{SBYEX}	-	108	130	μs	
		系统时钟源为HOCO		t_{SBYHO}	-	108	130	μs	

Note 1. ICK、FCK、PCKx的分频比是允许频率范围内的最小分频比。恢复时间由系统时钟源决定。当多个振荡器处于活动状态时，恢复时间可以通过以下表达式确定。

Note 2. 主时钟振荡器等待控制寄存器(MOSCWTCR)设置为05h。
Note 3. 主时钟振荡器等待控制寄存器(MOSCWTCR)设置为00h。

Table 2.28 从低功耗模式恢复的时间(5)

Parameter			Symbol	Min	Typ	Max	Unit	测试条件
从软件待机模式恢复时间*1	Subosc-speed mode	系统时钟源为副时钟振荡器（32.768kHz）	t_{SBYSC}	-	0.85	1	ms	Figure 2.34
		系统时钟源为LOCO(32.768kHz)	t_{SBYLO}	-	0.85	1.2	ms	

Note 1. 在Subosc速度模式期间，副时钟振荡器或LOCO本身在软件待机模式下继续振荡。

RA生态工作室

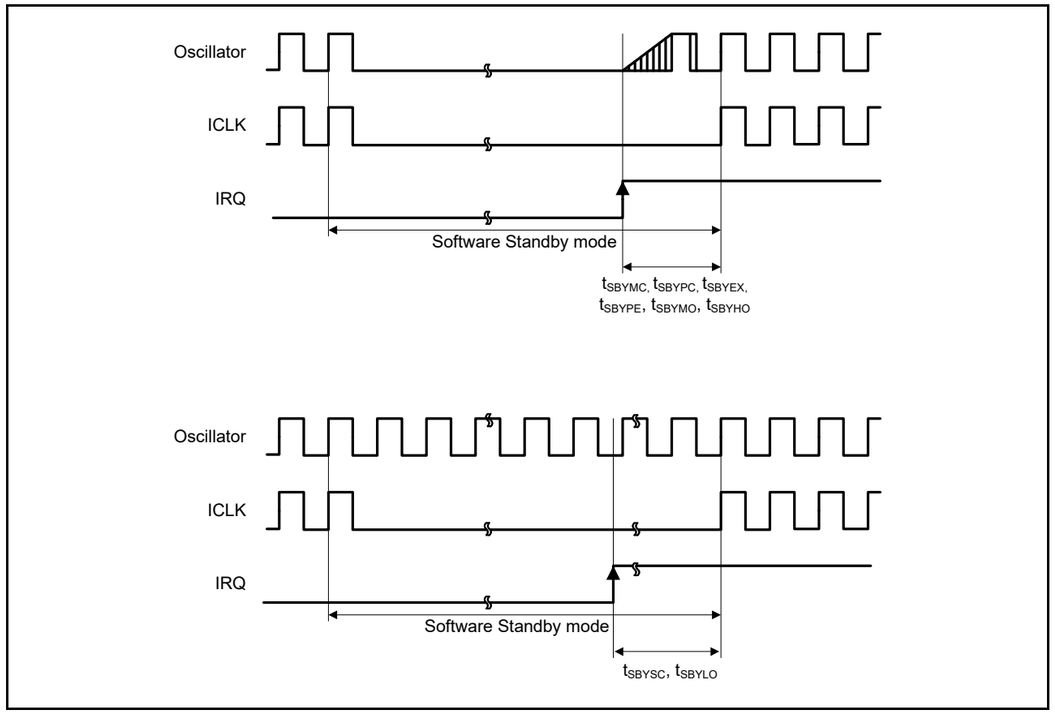

Figure 2.34 Software Standby mode cancellation timing

Table 2.29 Timing of recovery from low power modes (6)

Parameter		Symbol	Min	Typ	Max	Unit	Test conditions
Recovery time from Software Standby mode to Snooze mode	High-speed mode System clock source is HOCO	t_{SNZ}	-	36	45	μs	Figure 2.35
	Middle-speed mode System clock source is MOCO	t_{SNZ}	-	1.3	3.6	μs	
	Low-speed mode System clock source is MOCO	t_{SNZ}	-	10	13	μs	
	Low-voltage mode System clock source is HOCO	t_{SNZ}	-	87	110	μs	

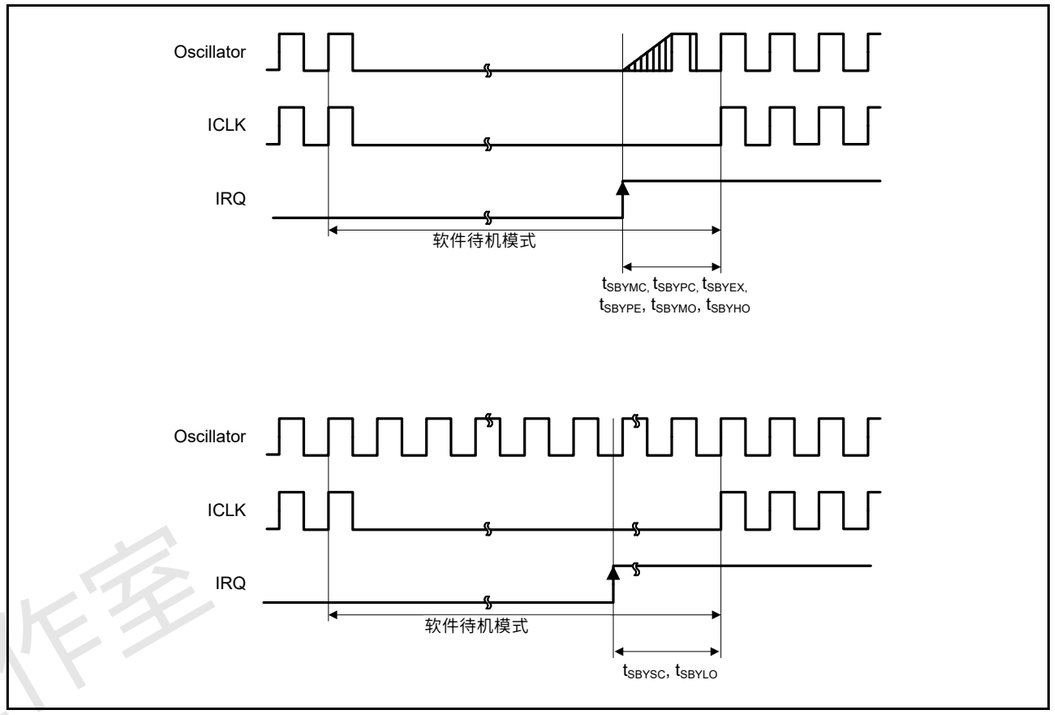

Figure 2.34 软件待机模式取消时序

Table 2.29 从低功耗模式恢复的时间(6)

Parameter		Symbol	Min	Typ	Max	Unit	测试条件
恢复时间从软件待机模式到贪睡模式	High-speed mode 系统时钟源为HOCO	t_{SNZ}	-	36	45	μs	Figure 2.35
	Middle-speed mode 系统时钟源为MOCO	t_{SNZ}	-	1.3	3.6	μs	
	Low-speed mode 系统时钟源为MOCO	t_{SNZ}	-	10	13	μs	
	Low-voltage mode 系统时钟源为HOCO	t_{SNZ}	-	87	110	μs	

RA生态工作室

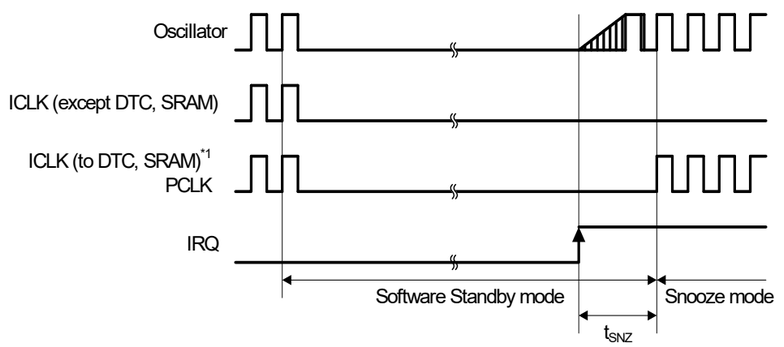

Note 1. When SNZCR.SNZDTCEN is set to 1, ICLK is supplied to DTC and SRAM.

Figure 2.35 Software Standby mode to Snooze mode recovery timing

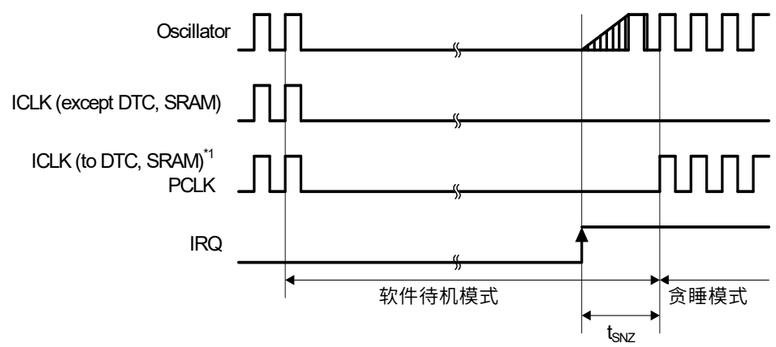

注1.当SNZCR.SNZDTCEN设置为1时，ICLK提供给DTC和SRAM。

Figure 2.35 软件待机模式到贪睡模式恢复时间

RA生态工作室

2.3.5 NMI and IRQ Noise Filter

Table 2.30 NMI and IRQ noise filter

Parameter	Symbol	Min	Typ	Max	Unit	Test conditions	
NMI pulse width	t_{NMIW}	200	-	-	ns	NMI digital filter disabled	$t_{Pcyc} \times 2 \le 200$ ns
		$t_{Pcyc} \times 2$*1	-	-			$t_{Pcyc} \times 2 > 200$ ns
		200	-	-		NMI digital filter enabled	$t_{NMICK} \times 3 \le 200$ ns
		$t_{NMICK} \times 3.5$*2	-	-			$t_{NMICK} \times 3 > 200$ ns
IRQ pulse width	t_{IRQW}	200	-	-	ns	IRQ digital filter disabled	$t_{Pcyc} \times 2 \le 200$ ns
		$t_{Pcyc} \times 2$*1	-	-			$t_{Pcyc} \times 2 > 200$ ns
		200	-	-		IRQ digital filter enabled	$t_{IRQCK} \times 3 \le 200$ ns
		$t_{IRQCK} \times 3.5$*3	-	-			$t_{IRQCK} \times 3 > 200$ ns

Note: 200 ns minimum in Software Standby mode.
Note: If the clock source is switched, add 4 clock cycles of the switched source.
Note 1. t_{Pcyc} indicates the cycle of PCLKB.
Note 2. t_{NMICK} indicates the cycle of the NMI digital filter sampling clock.
Note 3. t_{IRQCK} indicates the cycle of the IRQi digital filter sampling clock (i = 0 to 12, 14, 15).

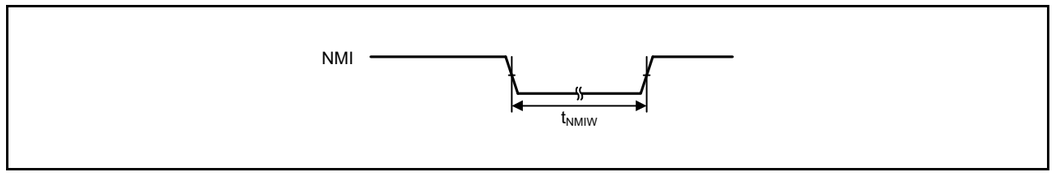

Figure 2.36 NMI interrupt input timing

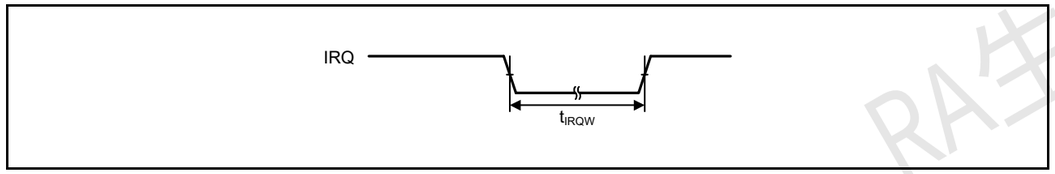

Figure 2.37 IRQ interrupt input timing

2.3.5 NMI和IRQ噪声滤波器

Table 2.30 NMI和IRQ噪声滤波器

Parameter	Symbol	Min	Typ	Max	Unit	测试条件	
NMI脉冲宽度	t_{NMIW}	200	-	-	ns	NMI数字滤波器禁用	$t_{Pcyc} \times 2 \le 200$ ns
		$t_{Pcyc} \times 2$*1	-	-			$t_{Pcyc} \times 2 > 200$ ns
		200	-	-		启用NMI数字滤波器	$t_{NMICK} \times 3 \le 200$ ns
		$t_{NMICK} \times 3.5$*2	-	-			$t_{NMICK} \times 3 > 200$ ns
IRQ脉冲宽度	t_{IRQW}	200	-	-	ns	IRQ数字滤波器禁用	$t_{Pcyc} \times 2 \le 200$ ns
		$t_{Pcyc} \times 2$*1	-	-			$t_{Pcyc} \times 2 > 200$ ns
		200	-	-		启用IRQ数字滤波器	$t_{IRQCK} \times 3 \le 200$ ns
		$t_{IRQCK} \times 3.5$*3	-	-			$t_{IRQCK} \times 3 > 200$ ns

Note: 软件待机模式下最少200ns。
Note: 如果时钟源切换，则增加切换源的4个时钟周期。
Note 1. tPcyc表示PCLKB的周期。
Note 2. tNMICK表示NMI数字滤波器采样时钟的周期。
Note 3. tIRQCK表示IRQi数字滤波器采样时钟的周期（i=0到12、14、15）。

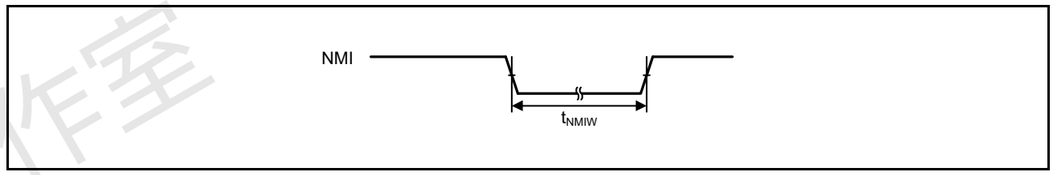

Figure 2.36 NMI中断输入时序

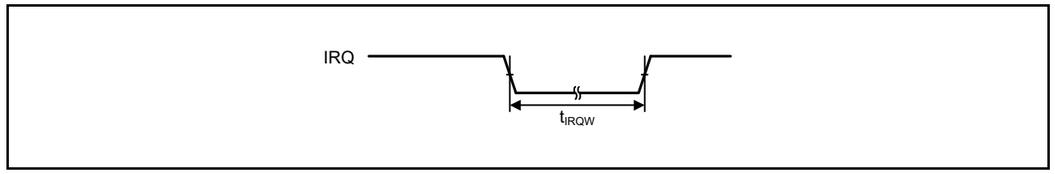

Figure 2.37 IRQ中断输入时序

RA生态工作室

2.3.6 I/O Ports, POEG, GPT, AGT, KINT, and ADC14 Trigger Timing

Table 2.31 I/O Ports, POEG, GPT, AGT, KINT, and ADC14 trigger timing

Parameter			Symbol	Min	Max	Unit	Test conditions
I/O ports	Input data pulse width		t_{PRW}	1.5	-	t_{Pcyc}	Figure 2.38
	Input/output data cycle (P002, P003, P004, P007)		t_{POcyc}	10	-	us	
POEG	POEG input trigger pulse width		t_{POEW}	3	-	t_{Pcyc}	Figure 2.39
GPT	Input capture pulse width	Single edge	t_{GTICW}	1.5	-	t_{PDcyc}	Figure 2.40
		Dual edge		2.5	-		
AGT	AGTIO, AGTEE input cycle	2.7 V ≤ VCC ≤ 5.5 V	t_{ACYC}*1	250	-	ns	Figure 2.41
		2.4 V ≤ VCC < 2.7 V		500	-	ns	
		1.8 V ≤ VCC < 2.4 V		1000	-	ns	
		1.6 V ≤ VCC < 1.8 V		2000	-	ns	
	AGTIO, AGTEE input high level width, low-level width	2.7 V ≤ VCC ≤ 5.5 V	t_{ACKWH}, t_{ACKWL}	100	-	ns	
		2.4 V ≤ VCC < 2.7 V		200	-	ns	
		1.8 V ≤ VCC < 2.4 V		400	-	ns	
		1.6 V ≤ VCC < 1.8 V		800	-	ns	
	AGTIO, AGTO, AGTOA, AGTOB output cycle	2.7 V ≤ VCC ≤ 5.5 V	t_{ACYC2}	62.5	-	ns	Figure 2.41
		2.4 V ≤ VCC < 2.7 V		125	-	ns	
		1.8 V ≤ VCC < 2.4 V		250	-	ns	
		1.6 V ≤ VCC < 1.8 V		500	-	ns	
ADC14	14-bit A/D converter trigger input pulse width		t_{TRGW}	1.5	-	t_{Pcyc}	Figure 2.42
KINT	KRn (n = 00 to 07) pulse width		t_{KR}	250	-	ns	Figure 2.43

Note 1. Constraints on input cycle:
When not switching the source clock: $t_{Pcyc} \times 2 < t_{ACYC}$ should be satisfied.
When switching the source clock: $t_{Pcyc} \times 6 < t_{ACYC}$ should be satisfied.

Note: t_{Pcyc}: PCLKB cycle, t_{PDcyc}: PCLKD cycle

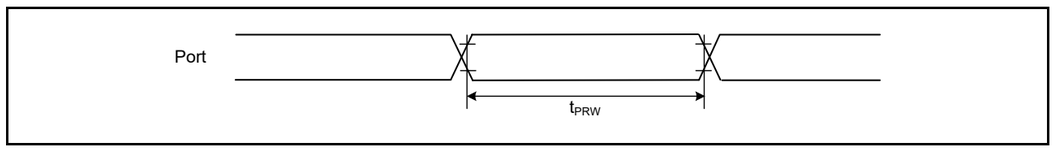

Figure 2.38 I/O ports input timing

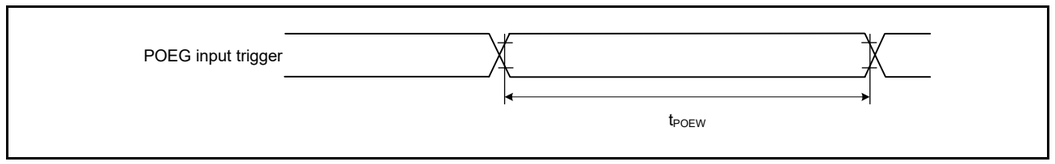

Figure 2.39 POEG input trigger timing

2.3.6 IO端口、POEG、GPT、AGT、KINT和ADC14触发时序

Table 2.31 IO端口、POEG、GPT、AGT、KINT和ADC14触发时序

Parameter			Symbol	Min	Max	Unit	测试条件
I/O ports	输入数据脉冲宽度		t_{PRW}	1.5	-	t_{Pcyc}	Figure 2.38
	输入输出数据周期（P002、P003、P004、P007）		t_{POcyc}	10	-	us	
POEG	POEG输入触发脉冲宽度		t_{POEW}	3	-	t_{Pcyc}	Figure 2.39
GPT	输入捕捉脉冲宽度	单边	t_{GTICW}	1.5	-	t_{PDcyc}	Figure 2.40
		双刃		2.5	-		
AGT	AGTIO、AGTEE输入周期	2.7 V ≤ VCC ≤ 5.5 V	t_{ACYC}*1	250	-	ns	Figure 2.41
		2.4 V ≤ VCC < 2.7 V		500	-	ns	
		1.8 V ≤ VCC < 2.4 V		1000	-	ns	
		1.6 V ≤ VCC < 1.8 V		2000	-	ns	
	AGTIO、AGTEE输入高电平宽度、低电平宽度	2.7 V ≤ VCC ≤ 5.5 V	t_{ACKWH}, t_{ACKWL}	100	-	ns	
		2.4 V ≤ VCC < 2.7 V		200	-	ns	
		1.8 V ≤ VCC < 2.4 V		400	-	ns	
		1.6 V ≤ VCC < 1.8 V		800	-	ns	
	AGTIO、AGTO、AGTOA、AGTOB输出周期	2.7 V ≤ VCC ≤ 5.5 V	t_{ACYC2}	62.5	-	ns	Figure 2.41
		2.4 V ≤ VCC < 2.7 V		125	-	ns	
		1.8 V ≤ VCC < 2.4 V		250	-	ns	
		1.6 V ≤ VCC < 1.8 V		500	-	ns	
ADC14	14位模数转换器触发输入脉冲宽度		t_{TRGW}	1.5	-	t_{Pcyc}	Figure 2.42
KINT	KRn(n=00to07)脉冲宽度		t_{KR}	250	-	ns	Figure 2.43

Note 1. 输入周期的约束：
不切换源时钟时：tPcyc×2<tACYC应满足。
切换源时钟时：tPcyc×6<tACYC应满足。

Note: t_{Pcyc}: PCLKB cycle, t_{PDcyc}: PCLKD cycle

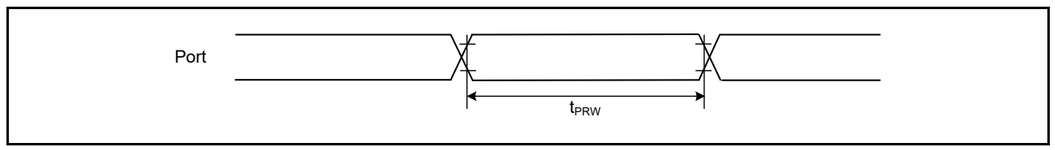

Figure 2.38 IO端口输入时序

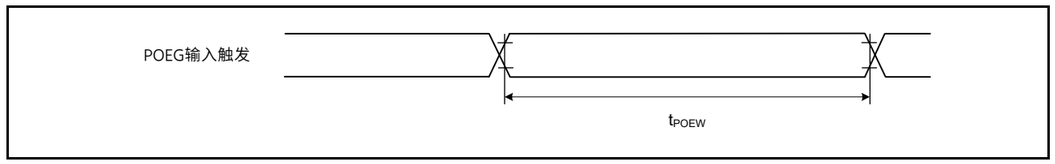

Figure 2.39 POEG输入触发时序

RA生态工作室

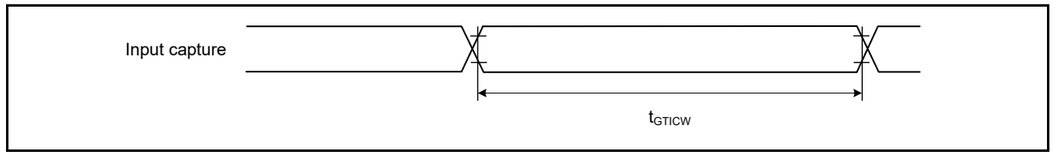

Figure 2.40 GPT input capture timing

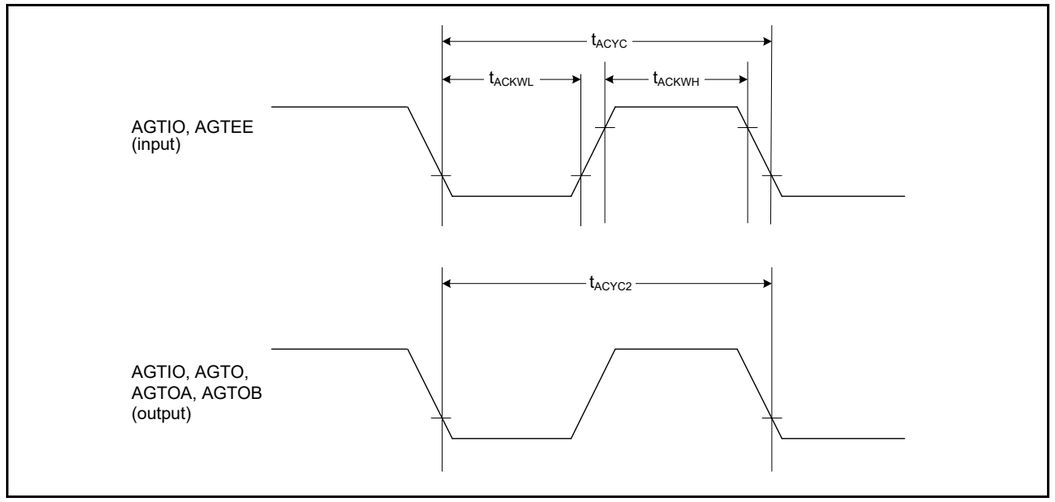

Figure 2.41 AGT I/O timing

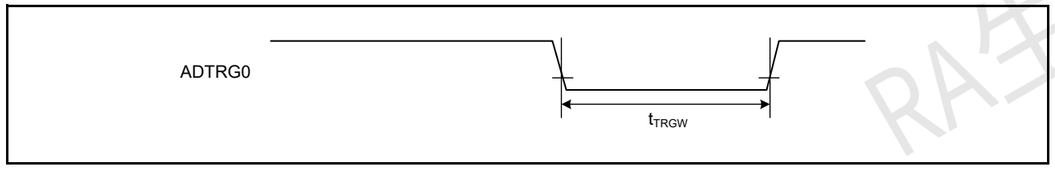

Figure 2.42 ADC14 trigger input timing

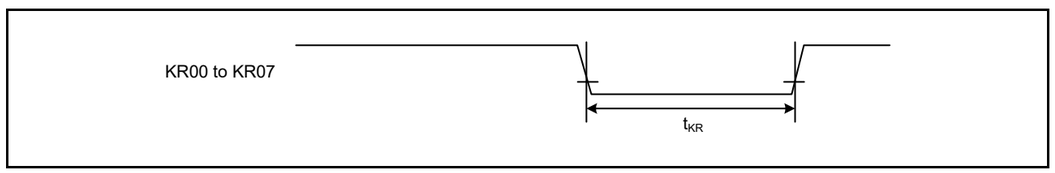

Figure 2.43 Key interrupt input timing

2.3.7 CAC Timing

Table 2.32 CAC timing

Parameter			Symbol	Min	Typ	Max	Unit	Test conditions
CAC	CACREF input pulse width	t_{PBcyc}*1 ≤ t_{cac}*2	t_{CACREF}	4.5 × t_{cac} + 3 × t_{PBcyc}*1	-	-	ns	-
		t_{PBcyc}*1 > t_{cac}*2		5 × t_{cac} + 6.5 × t_{PBcyc}*1	-	-	ns	

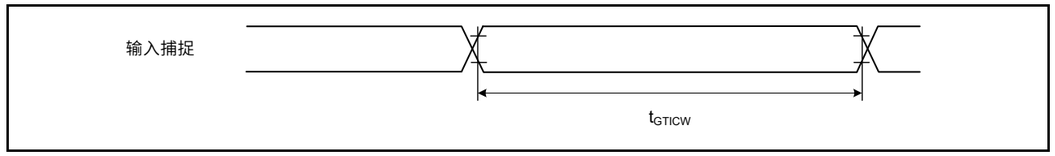

Figure 2.40 GPT输入捕捉时序

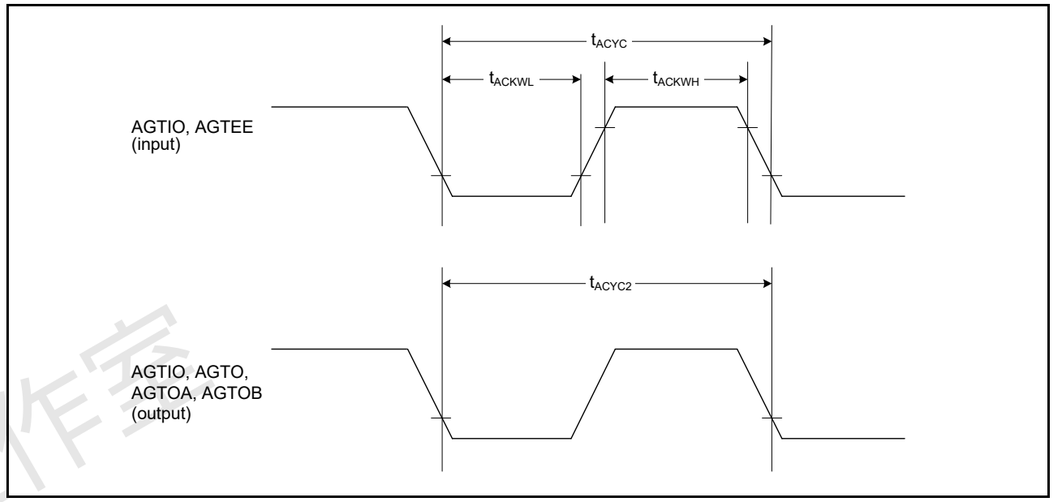

Figure 2.41 AGT I/O timing

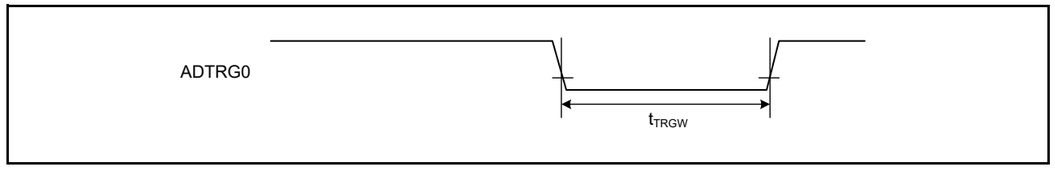

Figure 2.42 ADC14触发输入时序

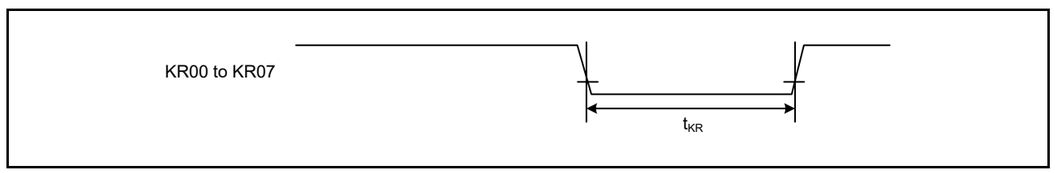

Figure 2.43 按键中断输入时序

2.3.7 CAC时序

Table 2.32 CAC计时

Parameter			Symbol	Min	Typ	Max	Unit	测试条件
CAC	CACREF输入脉冲宽度	t_{PBcyc}*1 ≤ t_{cac}*2	t_{CACREF}	4.5 × t_{cac} + 3 × t_{PBcyc}*1	-	-	ns	-
		t_{PBcyc}*1 > t_{cac}*2		5 × t_{cac} + 6.5 × t_{PBcyc}*1	-	-	ns	

RA生态工作室

Note 1. t_{PBcyc}: PCLKB cycle.
Note 2. t_{cac}: CAC count clock source cycle.

2.3.8 SCI Timing

Table 2.33 SCI timing (1)

Parameter				Symbol	Min	Max	Unit*1	Test conditions
SCI	Input clock cycle	Asynchronous		t_{Scyc}	4	-	t_{Pcyc}	Figure 2.44
		Clock synchronous			6	-		
	Input clock pulse width			t_{SCKW}	0.4	0.6	t_{Scyc}	
	Input clock rise time			t_{SCKr}	-	20	ns	
	Input clock fall time			t_{SCKf}	-	20	ns	
	Output clock cycle	Asynchronous		t_{Scyc}	6	-	t_{Pcyc}	
		Clock synchronous			4	-		
	Output clock pulse width			t_{SCKW}	0.4	0.6	t_{Scyc}	
	Output clock rise time		1.8 V or above	t_{SCKr}	-	20	ns	
			1.6 V or above		-	30		
	Output clock fall time		1.8 V or above	t_{SCKf}	-	20	ns	
			1.6 V or above		-	30		
	Transmit data delay (master)	Clock synchronous	1.8 V or above	t_{TXD}	-	40	ns	Figure 2.45
			1.6 V or above		-	45		
	Transmit data delay (slave)	Clock synchronous	2.7 V or above		-	55	ns	
			2.4 V or above		-	60		
			1.8 V or above		-	100		
			1.6 V or above		-	125		
	Receive data setup time (master)	Clock synchronous	2.7 V or above	t_{RXS}	45	-	ns	
			2.4 V or above		55	-		
			1.8 V or above		90	-		
			1.6 V or above		110	-		
	Receive data setup time (slave)	Clock synchronous	2.7 V or above		40	-	ns	
			1.6 V or above		45	-		
	Receive data hold time (master)	Clock synchronous		t_{RXH}	5	-	ns	
	Receive data hold time (slave)	Clock synchronous		t_{RXH}	40	-	ns	

Note 1. t_{Pcyc}: PCLKA cycle.

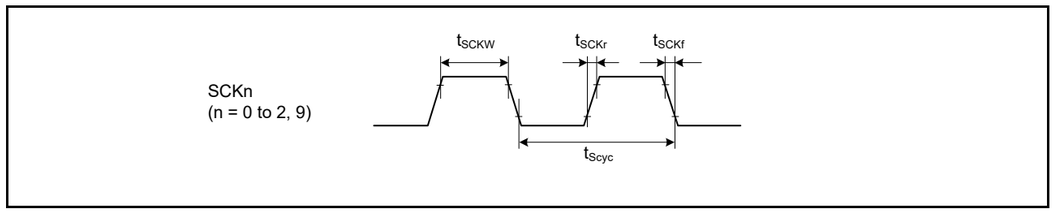

Figure 2.44 SCK clock input timing

Note 1. t_{PBcyc}: PCLKB cycle.
Note 2. tcac:CAC计数时钟源周期。

2.3.8 SCI时序

Table 2.33 SCI时序（1）

Parameter				Symbol	Min	Max	Unit*1	测试条件
SCI	输入时钟周期	Asynchronous		t_{Scyc}	4	-	t_{Pcyc}	Figure 2.44
		时钟同步			6	-		
	输入时钟脉冲宽度			t_{SCKW}	0.4	0.6	t_{Scyc}	
	输入时钟上升时间			t_{SCKr}	-	20	ns	
	输入时钟下降时间			t_{SCKf}	-	20	ns	
	输出时钟周期	Asynchronous		t_{Scyc}	6	-	t_{Pcyc}	
		时钟同步			4	-		
	输出时钟脉冲宽度			t_{SCKW}	0.4	0.6	t_{Scyc}	
	输出时钟上升时间		1.8V或以上	t_{SCKr}	-	20	ns	
			1.6V或以上		-	30		
	输出时钟下降时间		1.8V或以上	t_{SCKf}	-	20	ns	
			1.6V或以上		-	30		
	传输数据延迟（主）	时钟同步	1.8V或以上	t_{TXD}	-	40	ns	Figure 2.45
			1.6V或以上		-	45		
	传输数据延迟（从）	时钟同步	2.7V或以上		-	55	ns	
			2.4V或以上		-	60		
			1.8V或以上		-	100		
			1.6V或以上		-	125		
	接收数据建立时间（主）	时钟同步	2.7V或以上	t_{RXS}	45	-	ns	
			2.4V或以上		55	-		
			1.8V或以上		90	-		
			1.6V或以上		110	-		
	接收数据建立时间（从机）	时钟同步	2.7V或以上		40	-	ns	
			1.6V或以上		45	-		
	接收数据保持时间（主机）	时钟同步		t_{RXH}	5	-	ns	
	接收数据保持时间（从机）	时钟同步		t_{RXH}	40	-	ns	

Note 1. t_{Pcyc}: PCLKA cycle.

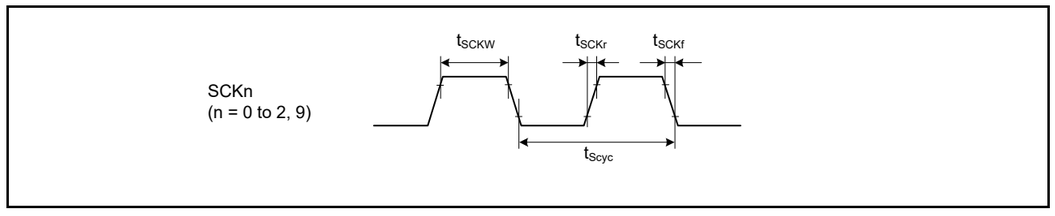

Figure 2.44 SCK时钟输入时序

RA生态工作室

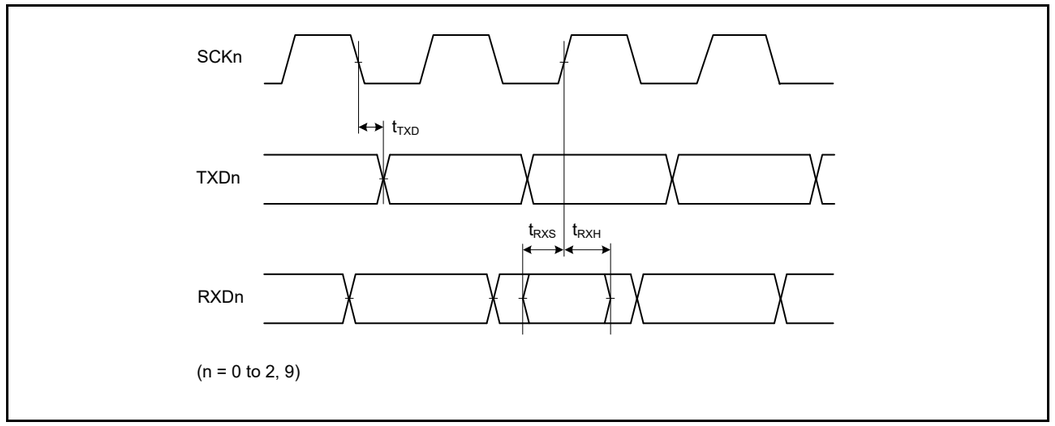

Figure 2.45 SCI input/output timing in clock synchronous mode

Table 2.34 SCI timing (2) (1 of 2)

Parameter			Symbol	Min	Max	Unit	Test conditions
Simple SPI	SCK clock cycle output (master)		t_{SPcyc}	4	65,536	t_{Pcyc}	Figure 2.46
	SCK clock cycle input (slave)			6	65,536		
	SCK clock high pulse width		t_{SPCKWH}	0.4	0.6	t_{SPcyc}	
	SCK clock low pulse width		t_{SPCKWL}	0.4	0.6	t_{SPcyc}	
	SCK clock rise and fall time	1.8 V or above	t_{SPCKr}, t_{SPCKf}	-	20	ns	
		1.6 V or above		-	30		
	Data input setup time	Master 2.7 V or above	t_{SU}	45	-	ns	Figure 2.47 to Figure 2.50
		Master 2.4 V or above		55	-		
		Master 1.8 V or above		80	-		
		Master 1.6 V or above		110	-		
		Slave 2.7 V or above		40	-		
		Slave 1.6 V or above		45	-		
	Data input hold time	Master	t_H	33.3	-	ns	
		Slave		40	-		
	SS input setup time		t_{LEAD}	1	-	t_{SPcyc}	
	SS input hold time		t_{LAG}	1	-	t_{SPcyc}	
	Data output delay	Master 1.8 V or above	t_{OD}	-	40	ns	
		Master 1.6 V or above		-	50		
		Slave 2.4 V or above		-	65		
		Slave 1.8 V or above		-	100		
		Slave 1.6 V or above		-	125		
	Data output hold time	Master 2.7 V or above	t_{OH}	-10	-	ns	
		Master 2.4 V or above		-20	-		
		Master 1.8 V or above		-30	-		
		Master 1.6 V or above		-40	-		
		Slave		-10	-		
	Data rise and fall time	Master 1.8 V or above	t_{Dr}, t_{Df}	-	20	ns	
		Master 1.6 V or above		-	30		
		Slave 1.8 V or above		-	20		
		Slave 1.6 V or above		-	30		

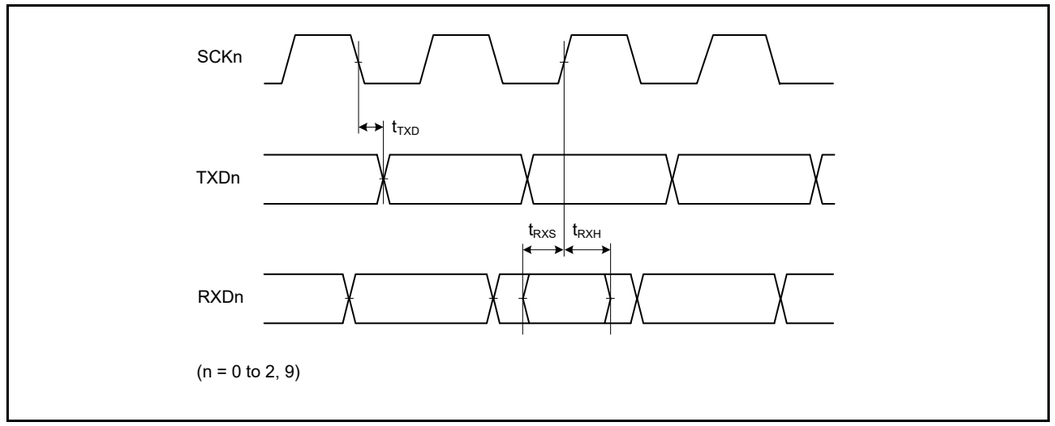

Figure 2.45 时钟同步模式下的SCI输入输出时序

Table 2.34 SCI计时(2)(1of2)

Parameter			Symbol	Min	Max	Unit	测试条件
Simple SPI	SCK时钟周期输出（主机）		t_{SPcyc}	4	65,536	t_{Pcyc}	Figure 2.46
	SCK时钟周期输入（从机）			6	65,536		
	SCK时钟高脉冲宽度		t_{SPCKWH}	0.4	0.6	t_{SPcyc}	
	SCK时钟低脉冲宽度		t_{SPCKWL}	0.4	0.6	t_{SPcyc}	
	SCK时钟上升和下降时间	1.8V或以上	t_{SPCKr}, t_{SPCKf}	-	20	ns	
		1.6V或以上		-	30		
	数据输入建立时间	Master 2.7V或以上	t_{SU}	45	-	ns	图2.47至 Figure 2.50
		Master 2.4V或以上		55	-		
		Master 1.8V或以上		80	-		
		Master 1.6V或以上		110	-		
		Slave 2.7V或以上		40	-		
		Slave 1.6V或以上		45	-		
	数据输入保持时间	Master	t_H	33.3	-	ns	
		Slave		40	-		
	SS输入建立时间		t_{LEAD}	1	-	t_{SPcyc}	
	SS输入保持时间		t_{LAG}	1	-	t_{SPcyc}	
	数据输出延迟	Master 1.8V或以上	t_{OD}	-	40	ns	
		Master 1.6V或以上		-	50		
		Slave 2.4V或以上		-	65		
		Slave 1.8V或以上		-	100		
		Slave 1.6V或以上		-	125		
	数据输出保持时间	Master 2.7V或以上	t_{OH}	-10	-	ns	
		Master 2.4V或以上		-20	-		
		Master 1.8V或以上		-30	-		
		Master 1.6V或以上		-40	-		
		Slave		-10	-		
	数据上升和下降时间	Master 1.8V或以上	t_{Dr}, t_{Df}	-	20	ns	
		Master 1.6V或以上		-	30		
		Slave 1.8V或以上		-	20		
		Slave 1.6V或以上		-	30		

RA生态工作室

Table 2.34 SCI timing (2) (2 of 2)

Parameter		Symbol	Min	Max	Unit	Test conditions
Simple SPI	Slave access time	t_{SA}	-	10 (PCLKA > 32 MHz), 6 (PCLKA ≤ 32 MHz)	t_{Pcyc}	Figure 2.49 and Figure 2.50
	Slave output release time	t_{REL}	-	10 (PCLKA > 32 MHz), 6 (PCLKA ≤ 32 MHz)	t_{Pcyc}	

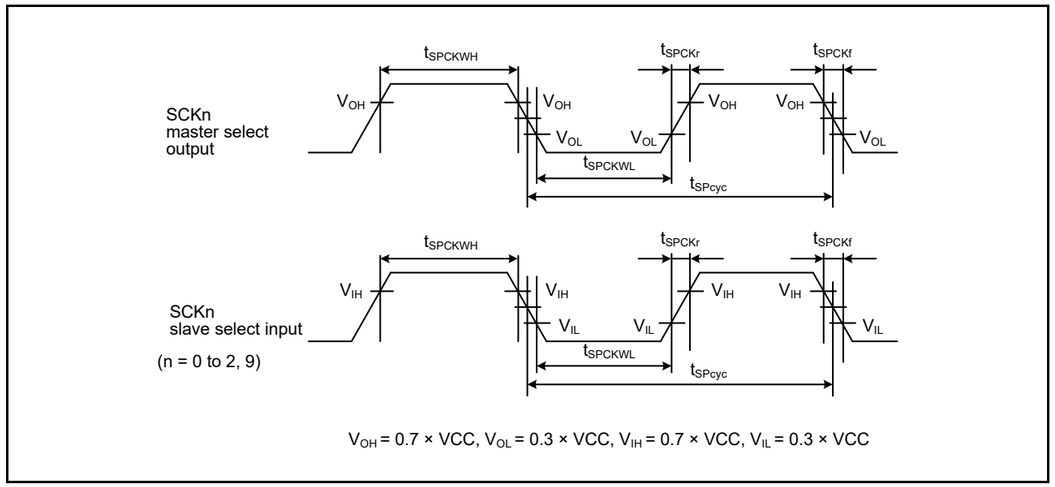

Figure 2.46 SCI simple SPI mode clock timing

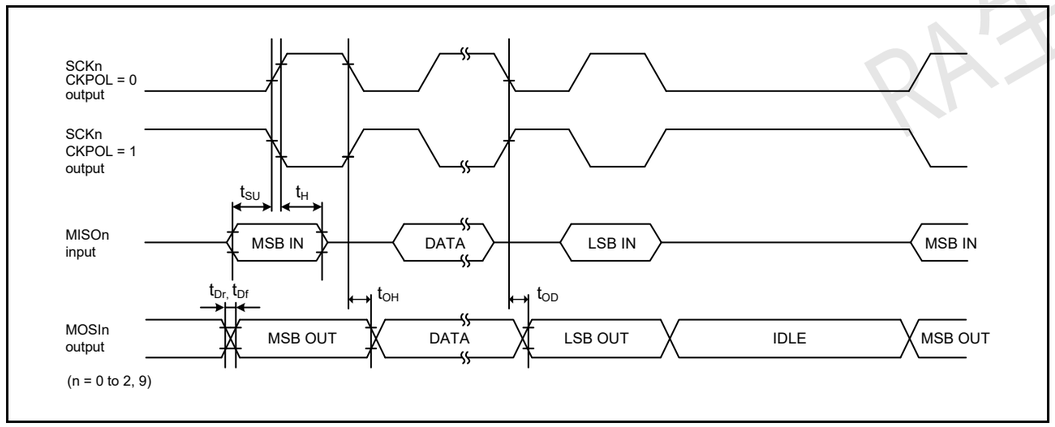

Figure 2.47 SCI simple SPI mode timing for master when CKPH = 1

Table 2.34 SCI计时(2)(2of2)

Parameter		Symbol	Min	Max	Unit	测试条件
Simple SPI	从站访问时间	t_{SA}	-	10 (PCLKA > 32 MHz), 6 (PCLKA ≤ 32 MHz)	t_{Pcyc}	图2.49和 Figure 2.50
	从机输出释放时间	t_{REL}	-	10 (PCLKA > 32 MHz), 6 (PCLKA ≤ 32 MHz)	t_{Pcyc}	

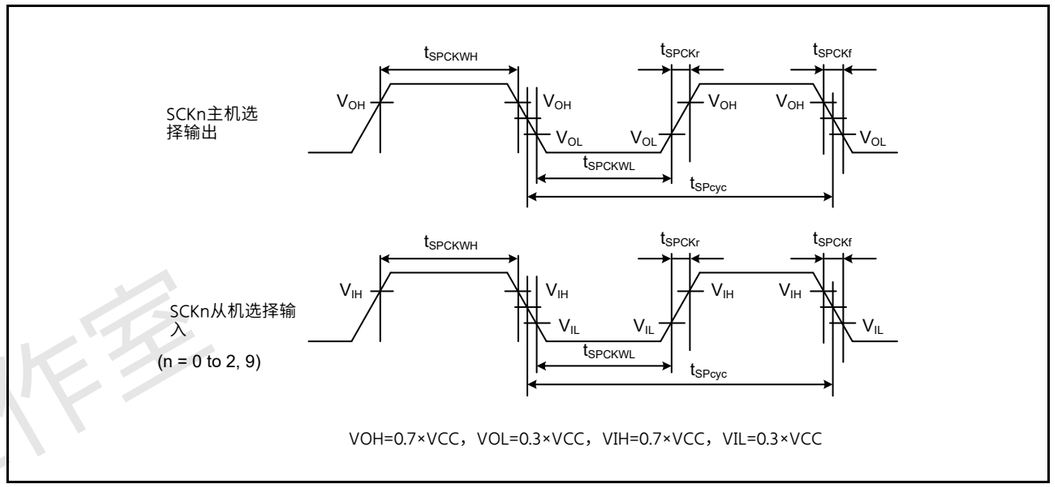

Figure 2.46 SCI简单SPI模式时钟时序

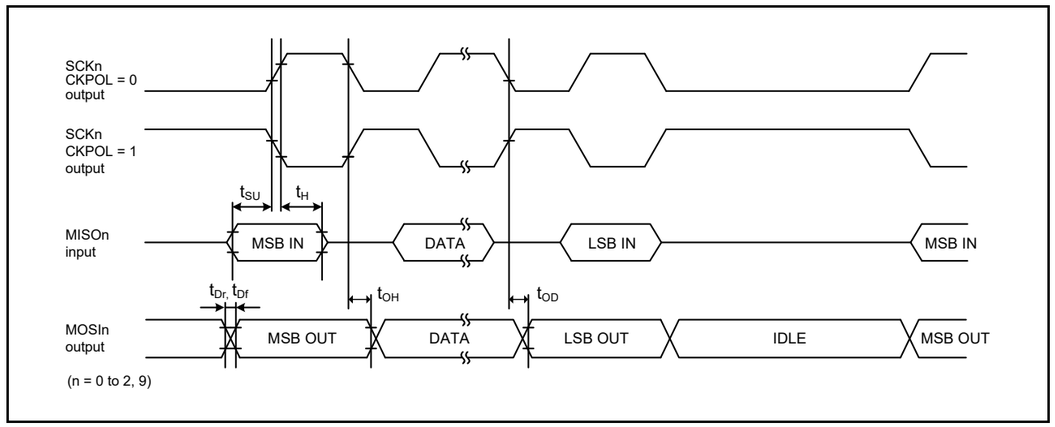

Figure 2.47 CKPH=1时主机的SCI简单SPI模式时序

RA生态工作室

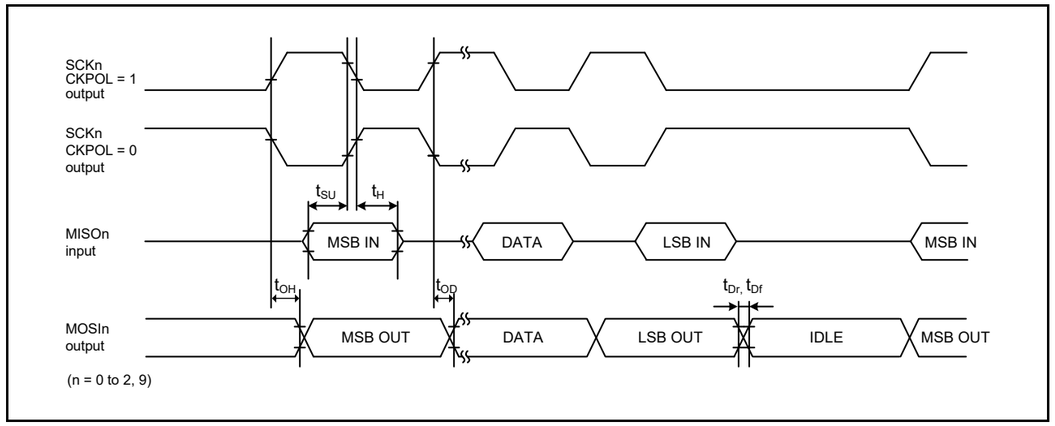

Figure 2.48 SCI simple SPI mode timing for master when CKPH = 0

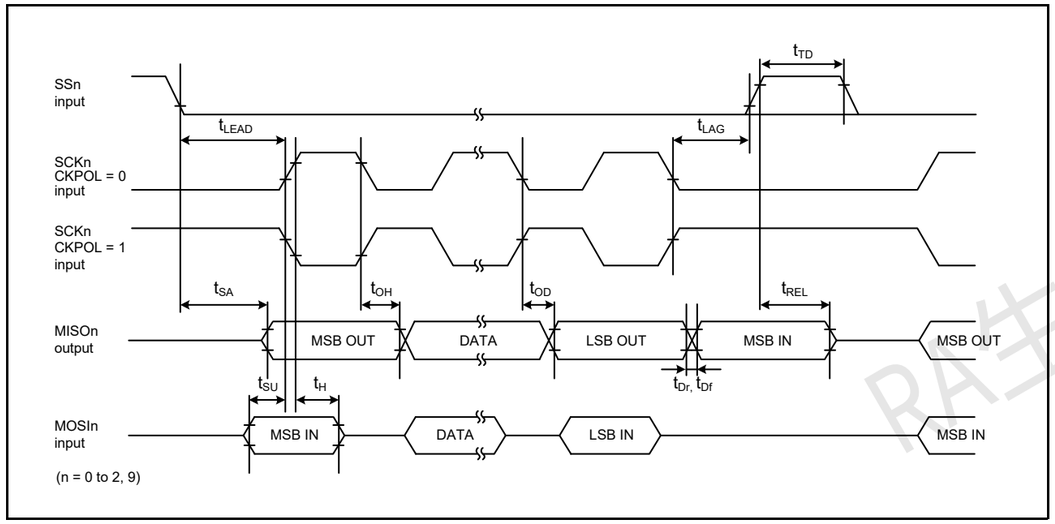

Figure 2.49 SCI simple SPI mode timing for slave when CKPH = 1

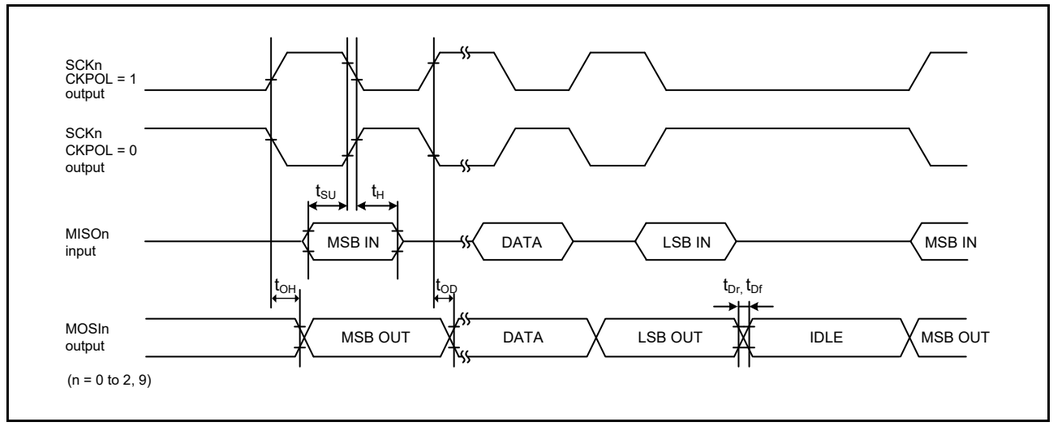

Figure 2.48 CKPH=0时主机的SCI简单SPI模式时序

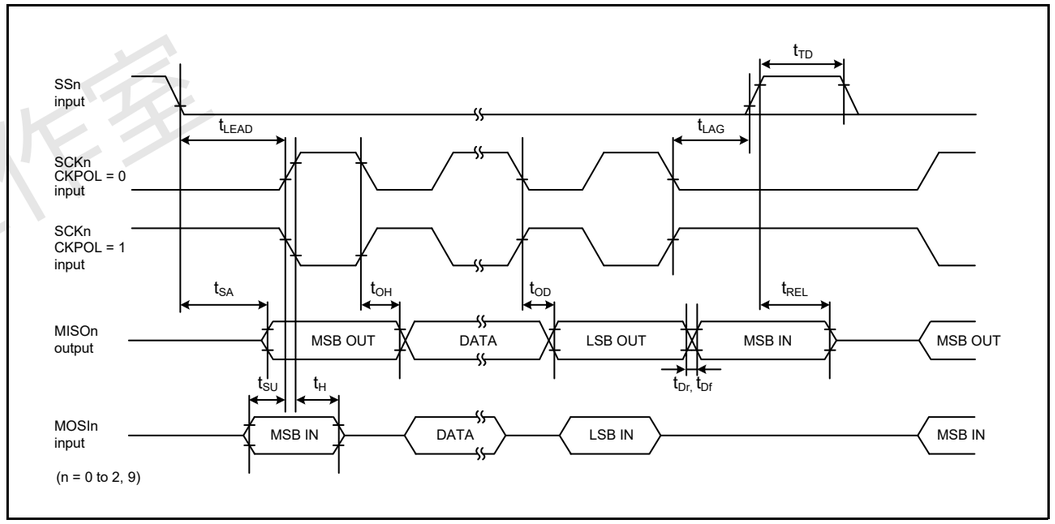

Figure 2.49 CKPH=1时从机的SCI简单SPI模式时序

RA生态工作室

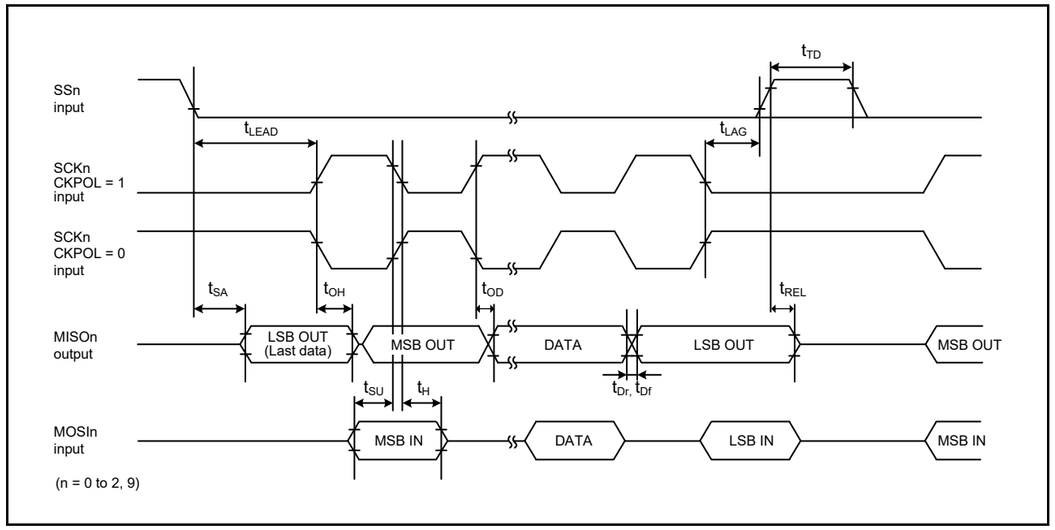

Figure 2.50 SCI simple SPI mode timing for slave when CKPH = 0

Table 2.35 SCI timing (3)

Conditions: VCC = 2.7 to 5.5 V

Parameter		Symbol	Min	Max	Unit	Test conditions
Simple I²C (Standard mode)	SDA input rise time	t_{Sr}	-	1000	ns	Figure 2.51
	SDA input fall time	t_{Sf}	-	300	ns	
	SDA input spike pulse removal time	t_{SP}	0	4 × t_{IICcyc}*1	ns	
	Data input setup time	t_{SDAS}	250	-	ns	
	Data input hold time	t_{SDAH}	0	-	ns	
	SCL, SDA capacitive load	C_b*2	-	400	pF	
Simple I²C (Fast mode)	SDA input rise time	t_{Sr}	-	300	ns	Figure 2.51 For all ports except P408, use PmnPFS.DSCR of middle drive. For port P408, use PmnPFS.DSCR1 /DSCR of middle drive for IIC fast-mode.
	SDA input fall time	t_{Sf}	-	300	ns	
	SDA input spike pulse removal time	t_{SP}	0	4 × t_{IICcyc}*1	ns	
	Data input setup time	t_{SDAS}	100	-	ns	
	Data input hold time	t_{SDAH}	0	-	ns	
	SCL, SDA capacitive load	C_b*1	-	400	pF	

Note 1. tIICcyc: Clock cycle selected by the SMR.CKS[1:0] bits.
Note 2. Cb indicates the total capacity of the bus line.

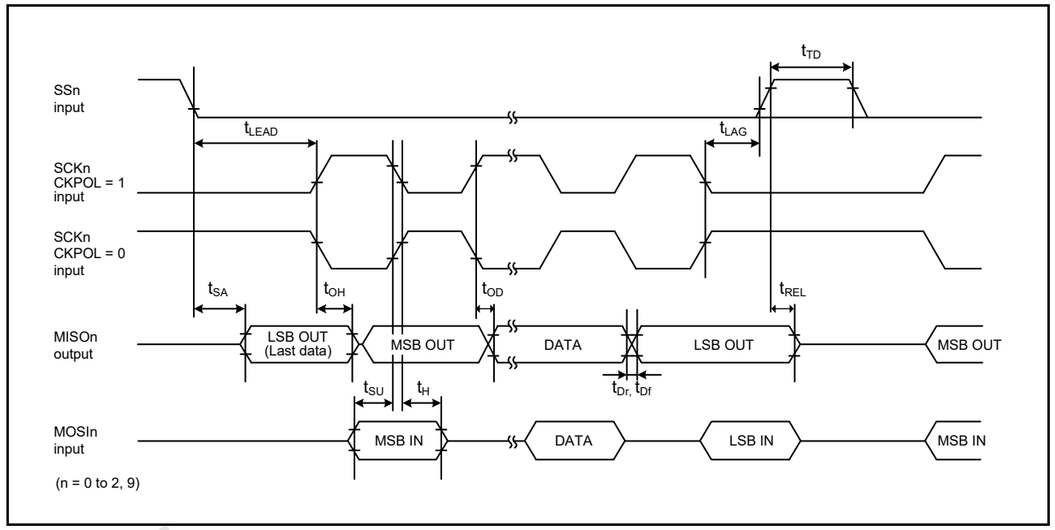

Figure 2.50 CKPH=0时从机的SCI简单SPI模式时序

Table 2.35 SCI时序（3）

Conditions: VCC = 2.7 to 5.5 V

Parameter		Symbol	Min	Max	Unit	测试条件
Simple I²C (Standard mode)	SDA输入上升时间	t_{Sr}	-	1000	ns	Figure 2.51
	SDA输入下降时间	t_{Sf}	-	300	ns	
	SDA输入尖峰脉冲去除时间	t_{SP}	0	4 × t_{IICcyc}*1	ns	
	数据输入建立时间	t_{SDAS}	250	-	ns	
	数据输入保持时间	t_{SDAH}	0	-	ns	
	SCL, SDA capacitive load	C_b*2	-	400	pF	
Simple I²C (Fast mode)	SDA输入上升时间	t_{Sr}	-	300	ns	图2.51除P408外的所有端口，使用中间驱动器的PmnPFS.DSCR。对于端口P408，使用IIC快速模式的中间驱动器的PmnPFS.DSCR1DSCR。
	SDA输入下降时间	t_{Sf}	-	300	ns	
	SDA输入尖峰脉冲去除时间	t_{SP}	0	4 × t_{IICcyc}*1	ns	
	数据输入建立时间	t_{SDAS}	100	-	ns	
	数据输入保持时间	t_{SDAH}	0	-	ns	
	SCL, SDA capacitive load	C_b*1	-	400	pF	

Note 1. tIICcyc：由SMR.CKS[1:0]位选择的时钟周期。
Note 2. Cb表示公交线路的总容量。

RA生态工作室

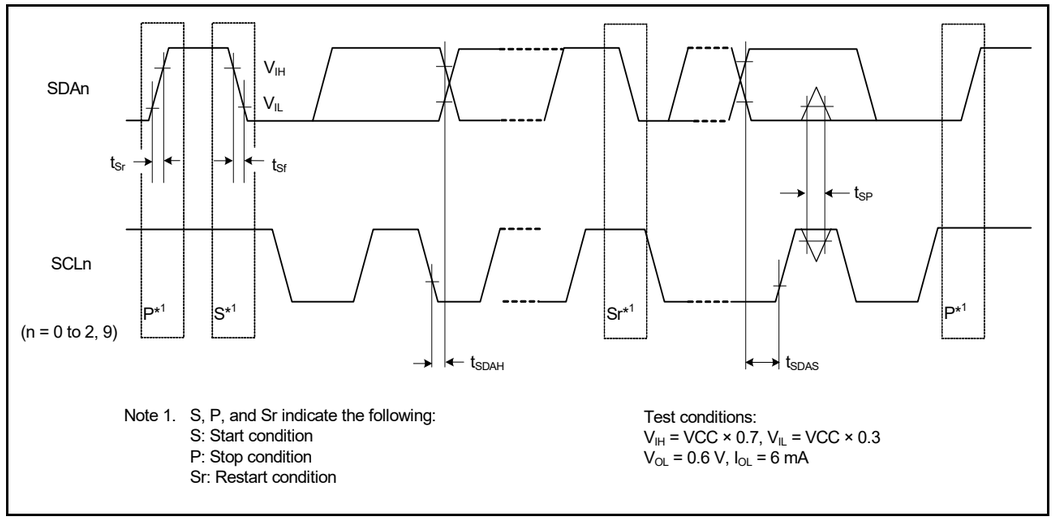

Figure 2.51 SCI simple IIC mode timing

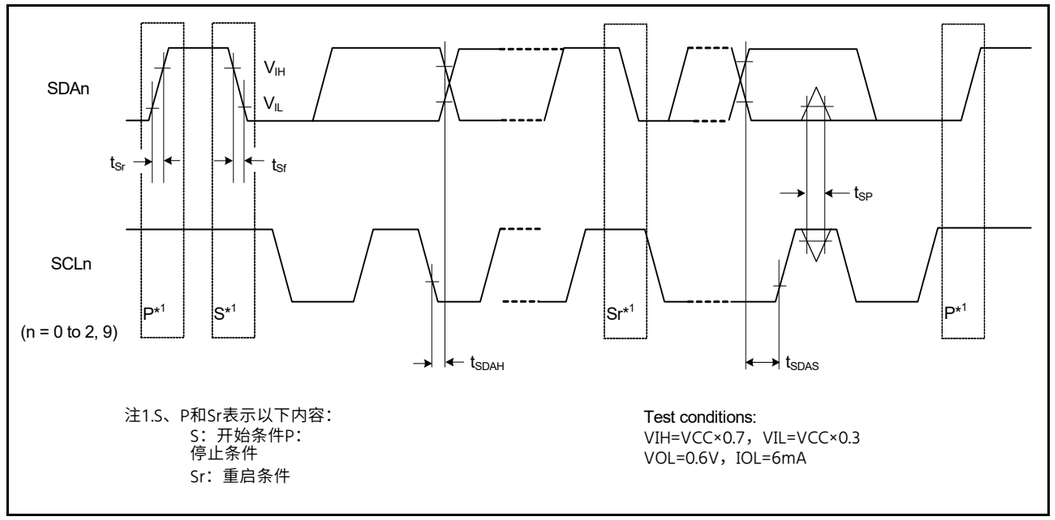

Figure 2.51 SCI简单IIC模式时序

RA生态工作室

2.3.9 SPI Timing

Table 2.36 SPI timing (1 of 2)

Conditions: Middle drive output is selected in the Port Drive Capability bit in PmnPFS register

Parameter				Symbol	Min	Max	Unit*1	Test conditions
SPI	RSPCK clock cycle	Master		t_{SPcyc}	2*4	4096	t_{Pcyc}	Figure 2.52
		Slave			6	4096		
	RSPCK clock high pulse width	Master		t_{SPCKWH}	(t_{SPcyc} - t_{SPCKr} - t_{SPCKf}) / 2 - 3	-	ns	
		Slave			3 × t_{Pcyc}	-		
	RSPCK clock low pulse width	Master		t_{SPCKWL}	(t_{SPcyc} - t_{SPCKr} - t_{SPCKf}) / 2 - 3	-	ns	
		Slave			3 × t_{Pcyc}	-		
	RSPCK clock rise and fall time	Output	2.7 V or above	t_{SPCKr}, t_{SPCKf}	-	10	ns	
			2.4 V or above		-	15		
			1.8 V or above		-	20		
			1.6 V or above		-	30		
		Input			-	1	μs	
	Data input setup time	Master		t_{SU}	10	-	ns	Figure 2.53 to Figure 2.58
		Slave	2.4 V or above		10	-		
			1.8 V or above		15	-		
			1.6 V or above		20	-		
	Data input hold time	Master (RSPCK is PCLKA/2)		t_{HF}	0	-	ns	
		Master (RSPCK is other than above.)		t_H	t_{Pcyc}	-		
		Slave		t_H	20	-		
	SSL setup time	Master	1.8 V or above	t_{LEAD}	-30 + N × t_{Spcyc}*2	-	ns	
			1.6 V or above		-50 + N × t_{Spcyc}*2	-		
		Slave			6 × t_{Pcyc}	-		
	SSL hold time	Master		t_{LAG}	-30 + N × t_{Spcyc}*3	-		
		Slave			6 × t_{Pcyc}	-		

2.3.9 SPI时序

Table 2.36 SPI时序（1of2）

条件：在PmnPFS寄存器的端口驱动能力位中选择中间驱动输出

Parameter				Symbol	Min	Max	Unit*1	测试条件
SPI	RSPCK时钟周期	Master		t_{SPcyc}	2*4	4096	t_{Pcyc}	Figure 2.52
		Slave			6	4096		
	RSPCK时钟高脉冲宽度	Master		t_{SPCKWH}	(t_{SPcyc} - t_{SPCKr} - t_{SPCKf}) / 2 - 3	-	ns	
		Slave			3 × t_{Pcyc}	-		
	RSPCK时钟低脉冲宽度	Master		t_{SPCKWL}	(t_{SPcyc} - t_{SPCKr} - t_{SPCKf}) / 2 - 3	-	ns	
		Slave			3 × t_{Pcyc}	-		
	RSPCK时钟上升和下降时间	Output	2.7V或以上	t_{SPCKr}, t_{SPCKf}	-	10	ns	
			2.4V或以上		-	15		
			1.8V或以上		-	20		
			1.6V或以上		-	30		
		Input			-	1	μs	
	数据输入建立时间	Master		t_{SU}	10	-	ns	图2.53至 Figure 2.58
		Slave	2.4V或以上		10	-		
			1.8V或以上		15	-		
			1.6V或以上		20	-		
	数据输入保持时间	主机（RSPCK为PCLK A2）		t_{HF}	0	-	ns	
		主控（RSPCK不在上述范围内。）		t_H	t_{Pcyc}	-		
		Slave		t_H	20	-		
	SSL设置时间	Master	1.8V或以上	t_{LEAD}	-30 + N × t_{Spcyc}*2	-	ns	
			1.6V或以上		-50 + N × t_{Spcyc}*2	-		
		Slave			6 × t_{Pcyc}	-		
	SSL保持时间	Master		t_{LAG}	-30 + N × t_{Spcyc}*3	-		
		Slave			6 × t_{Pcyc}	-		

RA生态工作室

Table 2.36 SPI timing (2 of 2)

Conditions: Middle drive output is selected in the Port Drive Capability bit in PmnPFS register

Parameter				Symbol	Min	Max	Unit*1	Test conditions
SPI	Data output delay	Master	2.7 V or above	t_{OD}	-	14	ns	Figure 2.53 to Figure 2.58
			2.4 V or above		-	20		
			1.8 V or above		-	25		
			1.6 V or above		-	30		
		Slave	2.7 V or above		-	50		
			2.4 V or above		-	60		
			1.8 V or above		-	85		
			1.6 V or above		-	110		
	Data output hold time	Master		t_{OH}	0	-	ns	
		Slave			0	-		
	Successive transmission delay	Master		t_{TD}	$t_{SPcyc} + 2 \times t_{Pcyc}$	$8 \times t_{SPcyc} + 2 \times t_{Pcyc}$	ns	
		Slave			$6 \times t_{Pcyc}$	-		
	MOSI and MISO rise and fall time	Output	2.7 V or above	t_{Dr}, t_{Df}	-	10	ns	
			2.4 V or above		-	15		
			1.8 V or above		-	20		
			1.6 V or above		-	30		
		Input			-	1	μs	
	SSL rise and fall time	Output	2.7 V or above	t_{SSLr}, t_{SSLf}	-	10	ns	
			2.4 V or above		-	15		
			1.8 V or above		-	20		
			1.6 V or above		-	30		
		Input			-	1	μs	
	Slave access time		2.4 V or above	t_{SA}	-	$2 \times t_{Pcyc} + 100$	ns	Figure 2.57 and Figure 2.58
			1.8 V or above		-	$2 \times t_{Pcyc} + 140$		
			1.6 V or above		-	$2 \times t_{Pcyc} + 180$		
	Slave output release time		2.4 V or above	t_{REL}	-	$2 \times t_{Pcyc} + 100$	ns	
			1.8 V or above		-	$2 \times t_{Pcyc} + 140$		
			1.6 V or above		-	$2 \times t_{Pcyc} + 180$		

Note 1. t_{Pcyc}: PCLKA cycle.
Note 2. N is set as an integer from 1 to 8 by the SPCKD register.
Note 3. N is set as an integer from 1 to 8 by the SSLND register.
Note 4. The upper limit of RSPCK is 16 MHz.

Table 2.36 SPI时序（2之2）

条件：在PmnPFS寄存器的端口驱动能力位中选择中间驱动输出

Parameter				Symbol	Min	Max	Unit*1	测试条件
SPI	数据输出延迟	Master	2.7V或以上	t_{OD}	-	14	ns	图2.53至 Figure 2.58
			2.4V或以上		-	20		
			1.8V或以上		-	25		
			1.6V或以上		-	30		
		Slave	2.7V或以上		-	50		
			2.4V或以上		-	60		
			1.8V或以上		-	85		
			1.6V或以上		-	110		
	数据输出保持时间	Master		t_{OH}	0	-	ns	
		Slave			0	-		
	连续传输延迟	Master		t_{TD}	$t_{SPcyc} + 2 \times t_{Pcyc}$	$8 \times t_{SPcyc} + 2 \times t_{Pcyc}$	ns	
		Slave			$6 \times t_{Pcyc}$	-		
	MOSI和MISO上升和下降时间	Output	2.7V或以上	t_{Dr}, t_{Df}	-	10	ns	
			2.4V或以上		-	15		
			1.8V或以上		-	20		
			1.6V或以上		-	30		
		Input			-	1	μs	
	SSL上升和下降时间	Output	2.7V或以上	t_{SSLr}, t_{SSLf}	-	10	ns	
			2.4V或以上		-	15		
			1.8V或以上		-	20		
			1.6V或以上		-	30		
		Input			-	1	μs	
	从站访问时间		2.4V或以上	t_{SA}	-	$2 \times t_{Pcyc} + 100$	ns	图2.57和 Figure 2.58
			1.8V或以上		-	$2 \times t_{Pcyc} + 140$		
			1.6V或以上		-	$2 \times t_{Pcyc} + 180$		
	从机输出释放时间		2.4V或以上	t_{REL}	-	$2 \times t_{Pcyc} + 100$	ns	
			1.8V或以上		-	$2 \times t_{Pcyc} + 140$		
			1.6V或以上		-	$2 \times t_{Pcyc} + 180$		

Note 1. t_{Pcyc}: PCLKA cycle.
Note 2. N由SPCKD寄存器设置为从1到8的整数。
Note 3. N由SSLND寄存器设置为1到8的整数。
Note 4. RSPCK的上限为16MHz。

RA生态工作室

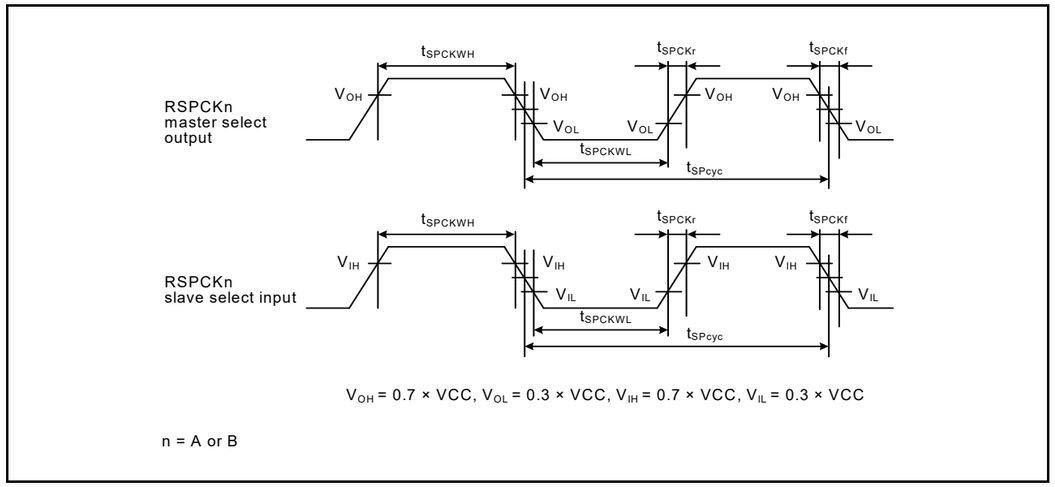

Figure 2.52 SPI clock timing

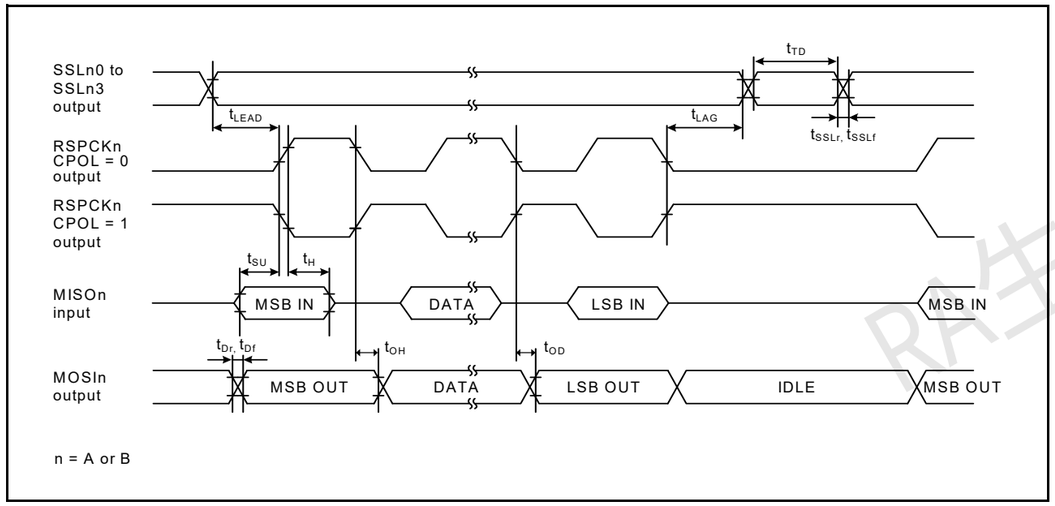

Figure 2.53 SPI timing for master when CPHA = 0 and the bit rate is set to any value other than PCLKA/2

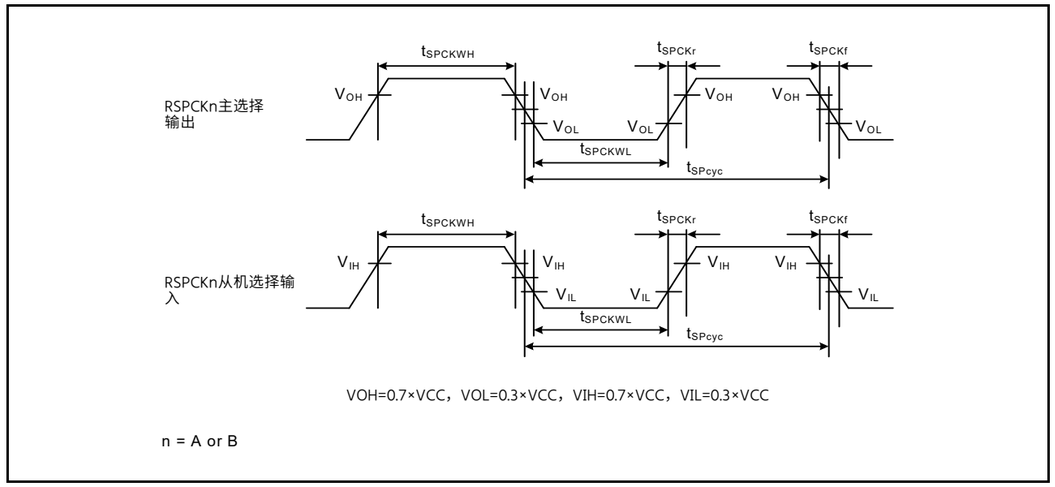

Figure 2.52 SPI时钟时序

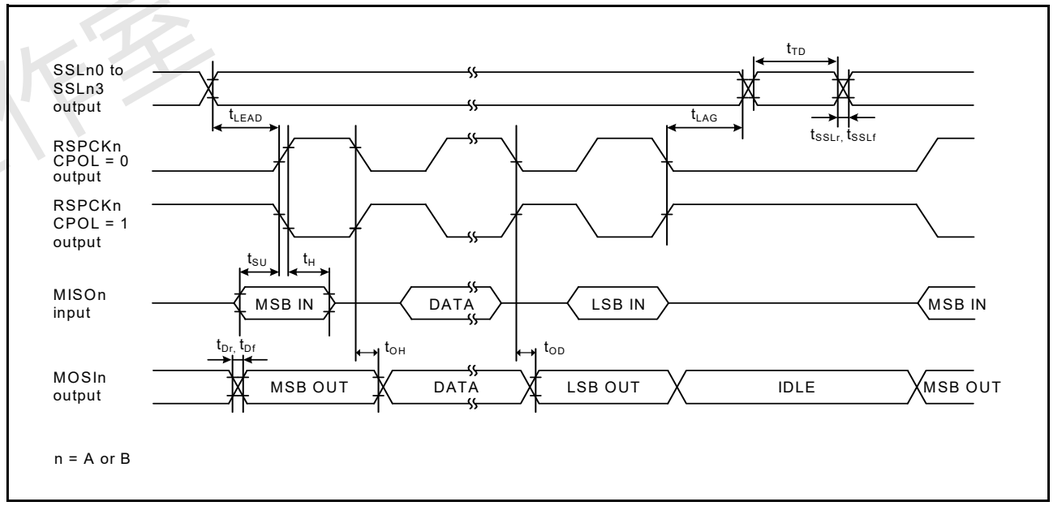

Figure 2.53 当CPHA=0且比特率设置为除PCLKA2以外的任何值时，主设备的SPI时序

RA生态工作室

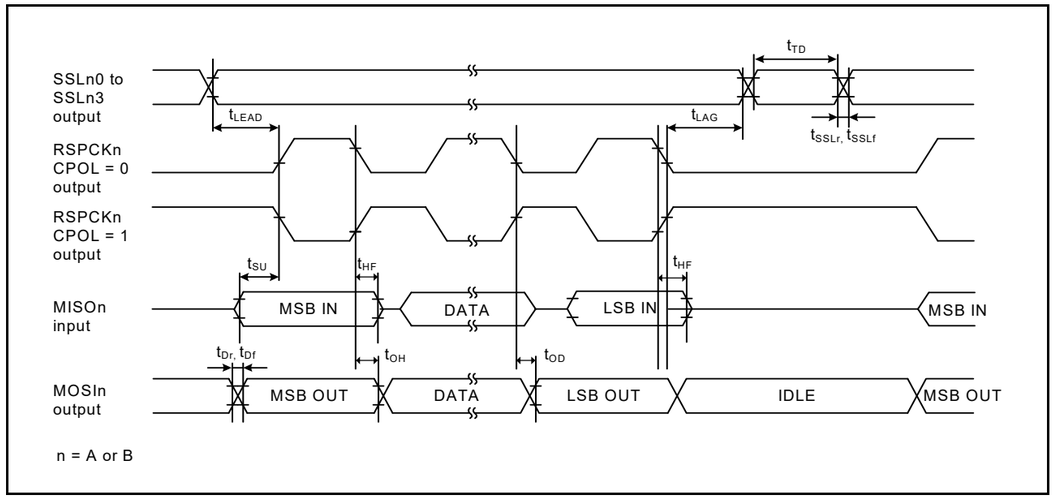

Figure 2.54 SPI timing for master when CPHA = 0 and the bit rate is set to PCLKA/2

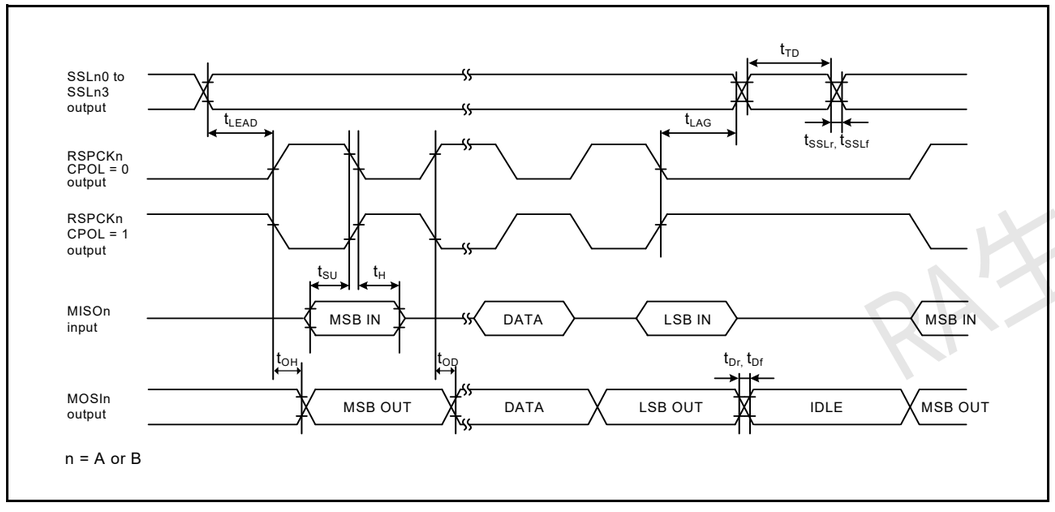

Figure 2.55 SPI timing for master when CPHA = 1 and the bit rate is set to any value other than PCLKA/2

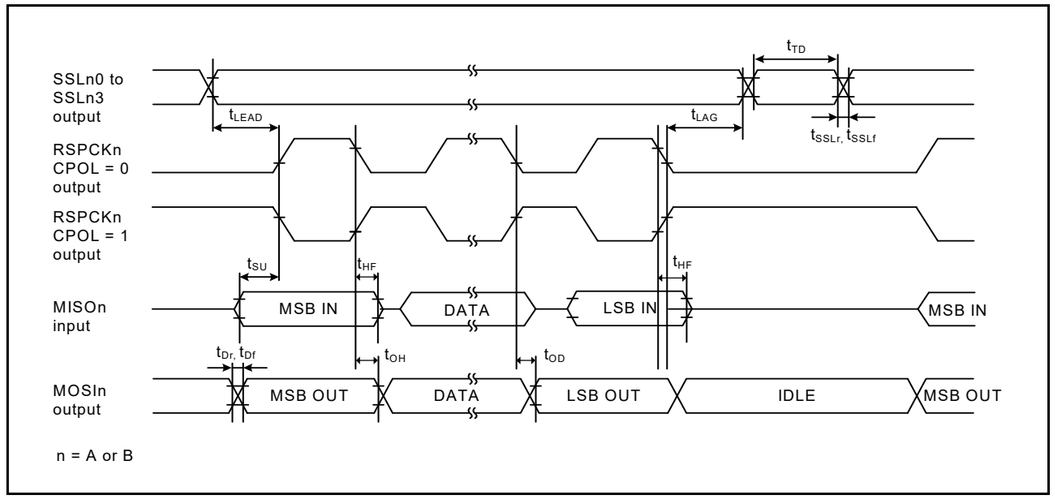

Figure 2.54 当CPHA=0且比特率设置为PCLKA2时主设备的SPI时序

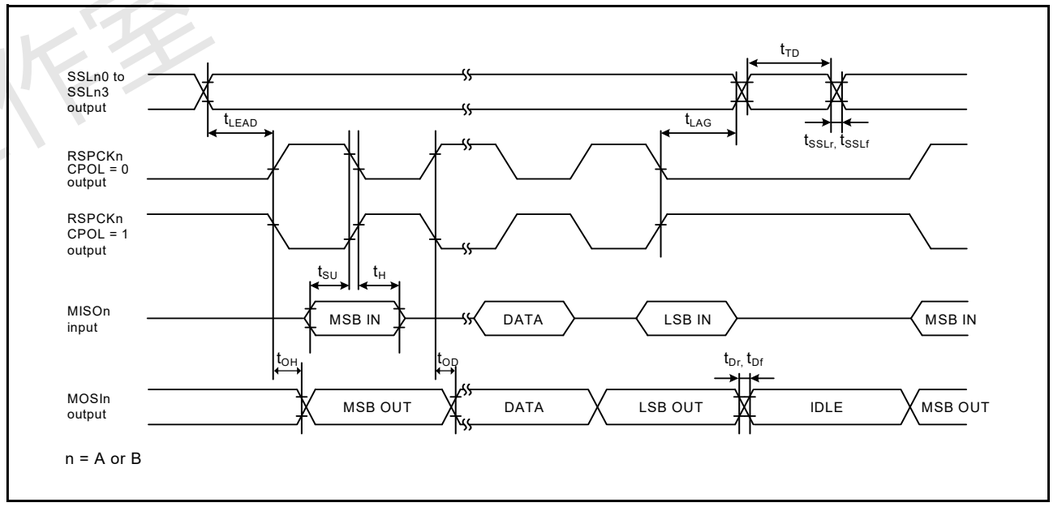

Figure 2.55 当CPHA=1且比特率设置为PCLKA2以外的任何值时，主设备的SPI时序

RA生态工作室

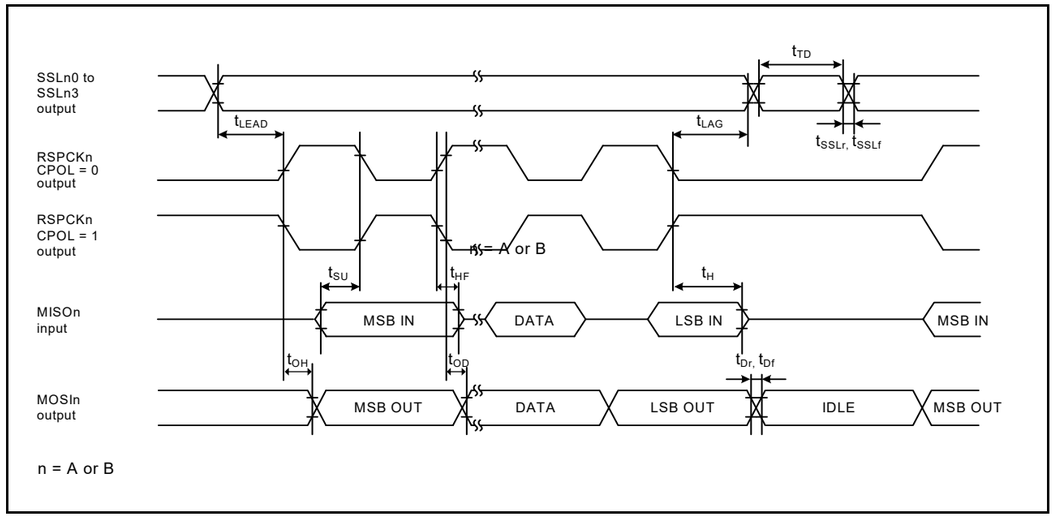

Figure 2.56 SPI timing for master when CPHA = 1 and the bit rate is set to PCLKA/2

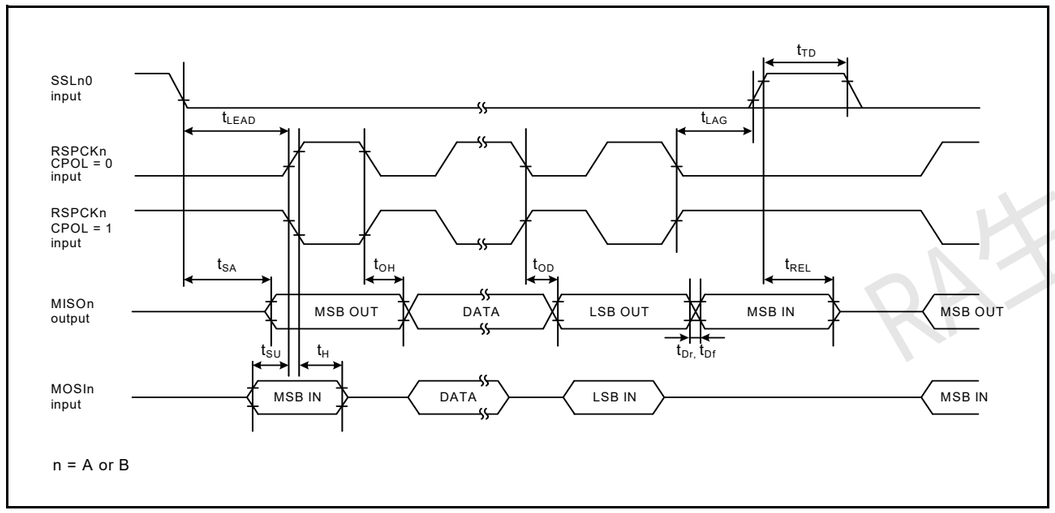

Figure 2.57 SPI timing for slave when CPHA = 0

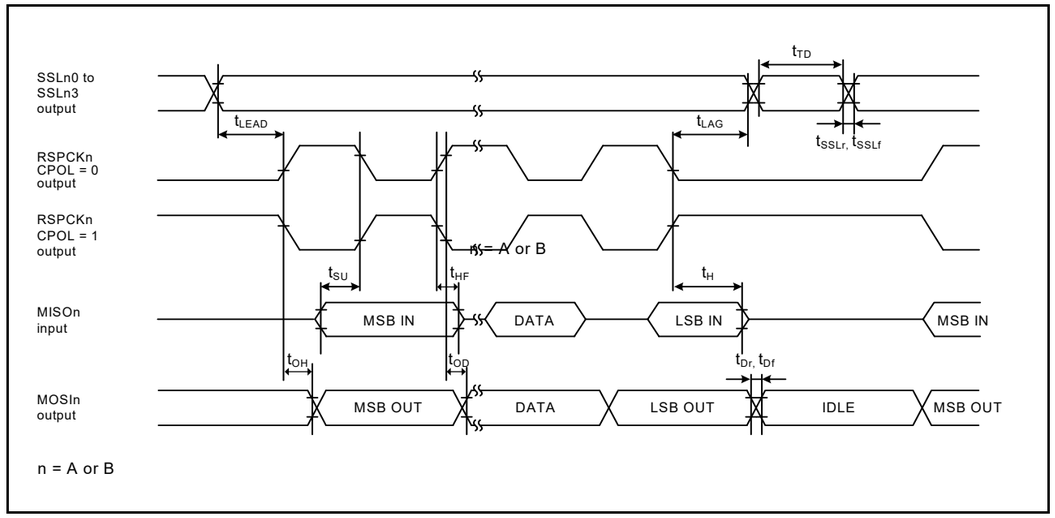

Figure 2.56 当CPHA=1且比特率设置为PCLKA2时主设备的SPI时序

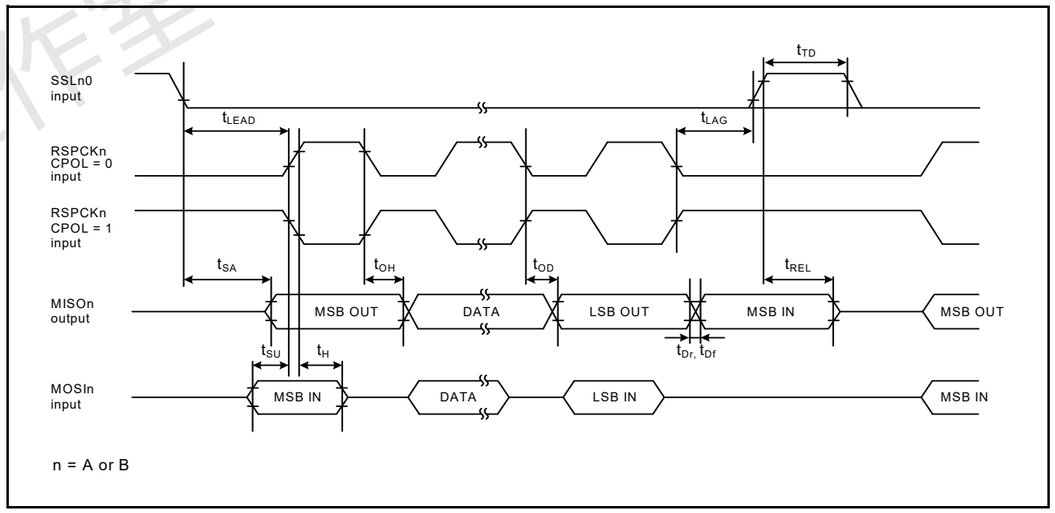

Figure 2.57 CPHA=0时从机的SPI时序

R4生态工作室

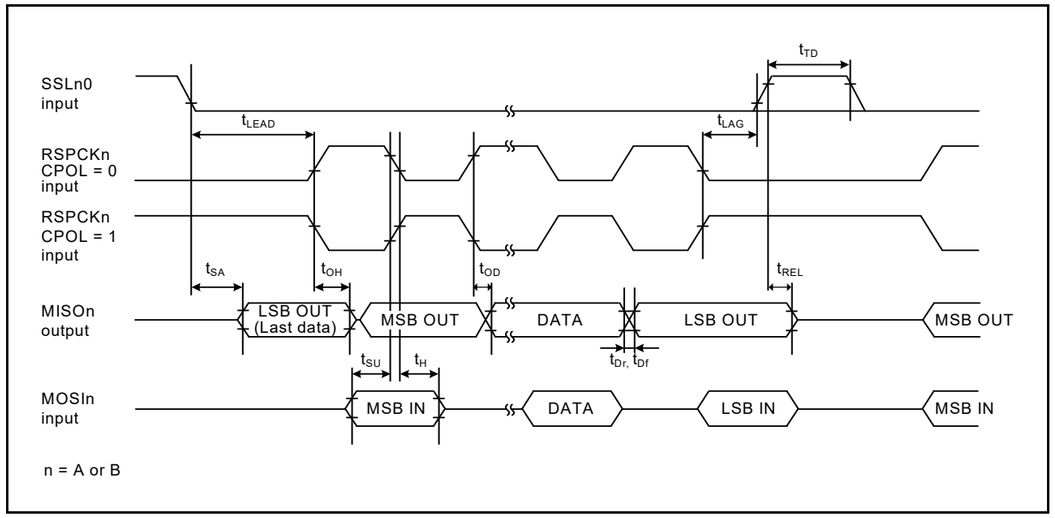

Figure 2.58 SPI timing for slave when CPHA = 1

2.3.10 IIC Timing

Table 2.37 IIC timing (1 of 2)
Conditions: VCC = 2.7 to 5.5 V

Parameter		Symbol	Min*1	Max	Unit	Test conditions
IIC (standard mode, SMBus)	SCL input cycle time	t_{SCL}	6 (12) × t_{IICcyc} + 1300	-	ns	Figure 2.59
	SCL input high pulse width	t_{SCLH}	3 (6) × t_{IICcyc} + 300	-	ns	
	SCL input low pulse width	t_{SCLL}	3 (6) × t_{IICcyc} + 300	-	ns	
	SCL, SDA input rise time	t_{Sr}	-	1,000	ns	
	SCL, SDA input fall time	t_{Sf}	-	300	ns	
	SCL, SDA input spike pulse removal time	t_{SP}	0	1 (4) × t_{IICcyc}	ns	
	SDA input bus free time (When wakeup function is disabled)	t_{BUF}	3 (6) × t_{IICcyc} + 300	-	ns	
	SDA input bus free time (When wakeup function is enabled)	t_{BUF}	3 (6) × t_{IICcyc} + 4 × t_{Pcyc} + 300	-	ns	
	START condition input hold time (When wakeup function is disabled)	t_{STAH}	t_{IICcyc} + 300	-	ns	
	START condition input hold time (When wakeup function is enabled)	t_{STAH}	1 (5) × t_{IICcyc} + t_{Pcyc} + 300	-	ns	
	Repeated START condition input setup time	t_{STAS}	1,000	-	ns	
	STOP condition input setup time	t_{STOS}	1,000	-	ns	
	Data input setup time	t_{SDAS}	t_{IICcyc} + 50	-	ns	
	Data input hold time	t_{SDAH}	0	-	ns	
	SCL, SDA capacitive load	C_b	-	400	pF	

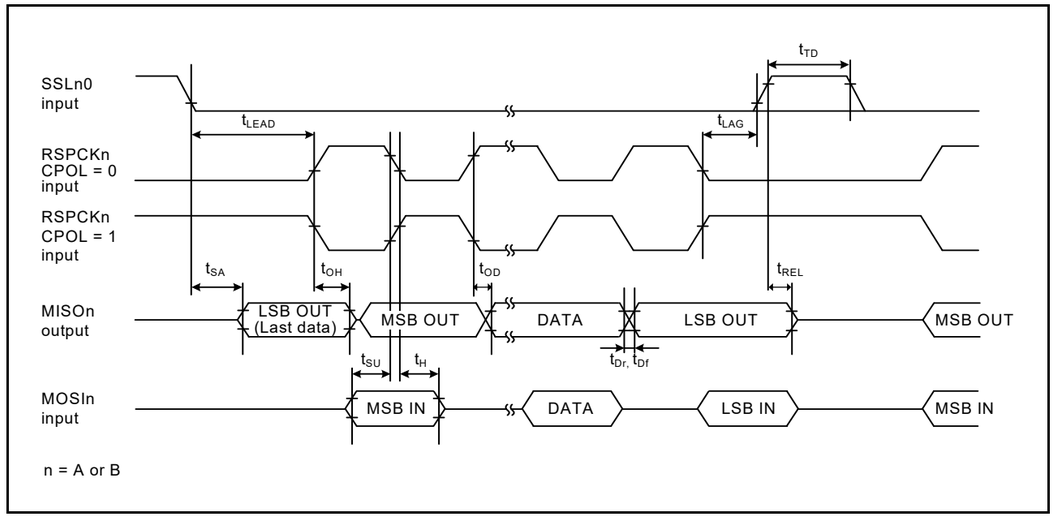

Figure 2.58 CPHA=1时从机的SPI时序

2.3.10 IIC Timing

Table 2.37 IIC时序(1of2)
Conditions: VCC = 2.7 to 5.5 V

Parameter		Symbol	Min*1	Max	Unit	测试条件
IIC (standard mode, SMBus)	SCL输入周期时间	t_{SCL}	6 (12) × t_{IICcyc} + 1300	-	ns	Figure 2.59
	SCL输入高脉冲宽度	t_{SCLH}	3 (6) × t_{IICcyc} + 300	-	ns	
	SCL输入低脉冲宽度	t_{SCLL}	3 (6) × t_{IICcyc} + 300	-	ns	
	SCL、SDA输入上升时间	t_{Sr}	-	1,000	ns	
	SCL、SDA输入下降时间	t_{Sf}	-	300	ns	
	SCL、SDA输入尖峰脉冲去除时间	t_{SP}	0	1 (4) × t_{IICcyc}	ns	
	SDA输入总线空闲时间（禁用唤醒功能时）	t_{BUF}	3 (6) × t_{IICcyc} + 300	-	ns	
	SDA输入总线空闲时间（启用唤醒功能时）	t_{BUF}	3 (6) × t_{IICcyc} + 4 × t_{Pcyc} + 300	-	ns	
	START条件输入保持时间（禁用唤醒功能时）	t_{STAH}	t_{IICcyc} + 300	-	ns	
	START条件输入保持时间（启用唤醒功能时）	t_{STAH}	1 (5) × t_{IICcyc} + t_{Pcyc} + 300	-	ns	
	重复启动条件输入建立时间	t_{STAS}	1,000	-	ns	
	STOP条件输入建立时间	t_{STOS}	1,000	-	ns	
	数据输入建立时间	t_{SDAS}	t_{IICcyc} + 50	-	ns	
	数据输入保持时间	t_{SDAH}	0	-	ns	
	SCL, SDA capacitive load	C_b	-	400	pF	

RA生态工作室

Table 2.37 IIC timing (2 of 2)
Conditions: VCC = 2.7 to 5.5 V

Parameter		Symbol	Min*1	Max	Unit	Test conditions
IIC (Fast mode)	SCL input cycle time	t_{SCL}	6 (12) × t_{IICcyc} + 600	-	ns	Figure 2.59 For all ports except P408, use PmnPFS.DSCR of middle drive. For port P408, use PmnPFS.DSCR1/DSCR of middle drive for IIC fast-mode.
	SCL input high pulse width	t_{SCLH}	3 (6) × t_{IICcyc} + 300	-	ns	
	SCL input low pulse width	t_{SCLL}	3 (6) × t_{IICcyc} + 300	-	ns	
	SCL, SDA input rise time	t_{Sr}	-	300	ns	
	SCL, SDA input fall time	t_{Sf}	-	300	ns	
	SCL, SDA input spike pulse removal time	t_{SP}	0	1 (4) × t_{IICcyc}	ns	
	SDA input bus free time (When wakeup function is disabled)	t_{BUF}	3 (6) × t_{IICcyc} + 300	-	ns	
	SDA input bus free time (When wakeup function is enabled)	t_{BUF}	3 (6) × t_{IICcyc} + 4 × t_{Pcyc} + 300	-	ns	
	START condition input hold time (When wakeup function is disabled)	t_{STAH}	t_{IICcyc} + 300	-	ns	
	START condition input hold time (When wakeup function is enabled)	t_{STAH}	1(5) × t_{IICcyc} + t_{Pcyc} + 300	-	ns	
	Repeated START condition input setup time	t_{STAS}	300	-	ns	
	STOP condition input setup time	t_{STOS}	300	-	ns	
	Data input setup time	t_{SDAS}	t_{IICcyc} + 50	-	ns	
	Data input hold time	t_{SDAH}	0	-	ns	
	SCL, SDA capacitive load	C_b	-	400	pF	

Note: t_{IICcyc}: IIC internal reference clock (IICφ) cycle, t_{Pcyc}: PCLKB cycle
Note 1. The value in parentheses apply when ICMR3.NF[1:0] is set to 11b while the digital filter is enabled with ICFER.NFE set to 1.

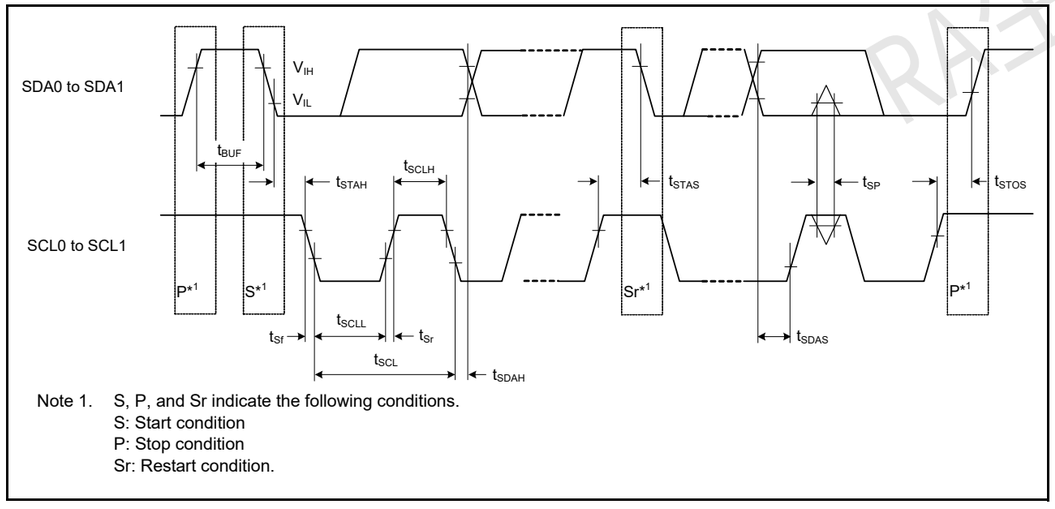

Note 1. S, P, and Sr indicate the following conditions.
S: Start condition
P: Stop condition
Sr: Restart condition.

Figure 2.59 IIC bus interface input/output timing

Table 2.37 IIC时序(2of2)
Conditions: VCC = 2.7 to 5.5 V

Parameter		Symbol	Min*1	Max	Unit	测试条件
IIC (Fast mode)	SCL输入周期时间	t_{SCL}	6 (12) × t_{IICcyc} + 600	-	ns	图2.59对于除P408以外的所有端口，使用PmnPFS.DSC 中间驱动器的R。对于端口P408，使用PmnPFS.DSCR1中间驱动器的DSCR用于IIC快速模式。
	SCL输入高脉冲宽度	t_{SCLH}	3 (6) × t_{IICcyc} + 300	-	ns	
	SCL输入低脉冲宽度	t_{SCLL}	3 (6) × t_{IICcyc} + 300	-	ns	
	SCL、SDA输入上升时间	t_{Sr}	-	300	ns	
	SCL、SDA输入下降时间	t_{Sf}	-	300	ns	
	SCL、SDA输入尖峰脉冲去除时间	t_{SP}	0	1 (4) × t_{IICcyc}	ns	
	SDA输入总线空闲时间（禁用唤醒功能时）	t_{BUF}	3 (6) × t_{IICcyc} + 300	-	ns	
	SDA输入总线空闲时间（启用唤醒功能时）	t_{BUF}	3 (6) × t_{IICcyc} + 4 × t_{Pcyc} + 300	-	ns	
	START条件输入保持时间（禁用唤醒功能时）	t_{STAH}	t_{IICcyc} + 300	-	ns	
	START条件输入保持时间（启用唤醒功能时）	t_{STAH}	1(5) × t_{IICcyc} + t_{Pcyc} + 300	-	ns	
	重复启动条件输入建立时间	t_{STAS}	300	-	ns	
	STOP条件输入建立时间	t_{STOS}	300	-	ns	
	数据输入建立时间	t_{SDAS}	t_{IICcyc} + 50	-	ns	
	数据输入保持时间	t_{SDAH}	0	-	ns	
	SCL, SDA capacitive load	C_b	-	400	pF	

Note: tIICcyc:IIC内部参考时钟(IICφ)周期，tPcyc:PCLKB周期
Note 1. 括号中的值适用于ICMR3.NF[1:0]设置为11b且数字滤波器启用且ICFER.NFE设置为1时。

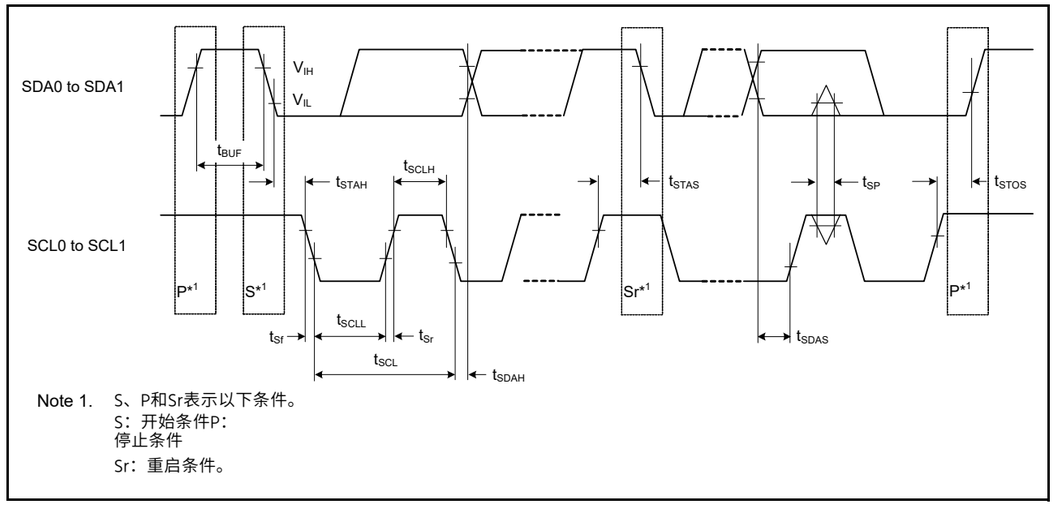

Note 1. S、P和Sr表示以下条件。
S：开始条件P：
停止条件
Sr：重启条件。

Figure 2.59 IIC总线接口输入输出时序

RA生态工作室

2.3.11 SSIE Timing

Table 2.38 SSIE timing
Conditions: VCC = 1.6 to 5.5 V

Parameter			Symbol	Min	Max	Unit	Test conditions
SSIE	AUDIO_CLK input frequency	2.7 V or above	t_{AUDIO}	-	25	MHz	-
		1.6 V or above		-	4		
	Output clock period		t_O	250	-	ns	Figure 2.60
	Input clock period		t_I	250	-	ns	
	Clock high pulse width	1.8 V or above	t_{HC}	100	-	ns	
		1.6 V or above		200	-		
	Clock low pulse width	1.8 V or above	t_{LC}	100	-	ns	
		1.6 V or above		200	-		
	Clock rise time		t_{RC}	-	25	ns	
	Data delay	2.7 V or above	t_{DTR}	-	65	ns	Figure 2.61, Figure 2.62
		1.8 V or above		-	105		
		1.6 V or above		-	140		
	Set-up time	2.7 V or above	t_{SR}	65	-	ns	
		1.8 V or above		90	-		
		1.6 V or above		140	-		
	Hold time		t_{HTR}	40	-	ns	
	SSITXD0 output delay from SSILRCK0/SSIFS0 change time	1.8 V or above	T_{DTRW}	-	105	ns	Figure 2.63
		1.6 V or above		-	140		

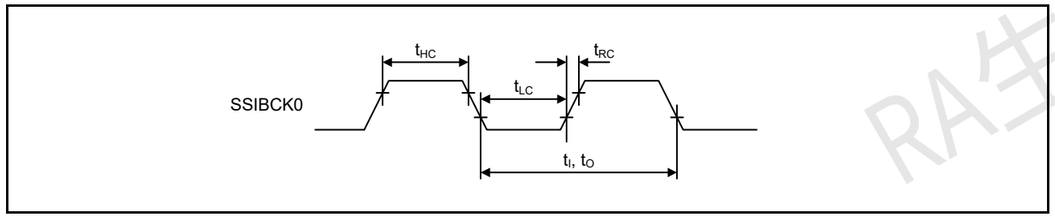

Figure 2.60 SSIE clock input/output timing

2.3.11 SSIE Timing

Table 2.38 SSIE timing
Conditions: VCC = 1.6 to 5.5 V

Parameter			Symbol	Min	Max	Unit	测试条件
SSIE	AUDIO_CLK输入频率	2.7V或以上	t_{AUDIO}	-	25	MHz	-
		1.6V或以上		-	4		
	输出时钟周期		t_O	250	-	ns	Figure 2.60
	输入时钟周期		t_I	250	-	ns	
	时钟高脉冲宽度	1.8V或以上	t_{HC}	100	-	ns	
		1.6V或以上		200	-		
	时钟低脉冲宽度	1.8V或以上	t_{LC}	100	-	ns	
		1.6V或以上		200	-		
	时钟上升时间		t_{RC}	-	25	ns	
	数据延迟	2.7V或以上	t_{DTR}	-	65	ns	Figure 2.61, Figure 2.62
		1.8V或以上		-	105		
		1.6V或以上		-	140		
	Set-up time	2.7V或以上	t_{SR}	65	-	ns	
		1.8V或以上		90	-		
		1.6V或以上		140	-		
	保持时间		t_{HTR}	40	-	ns	
	从SSILRCK0SSIFS0更改时间的SSITXD0输出延迟	1.8V或以上	T_{DTRW}	-	105	ns	Figure 2.63
		1.6V或以上		-	140		

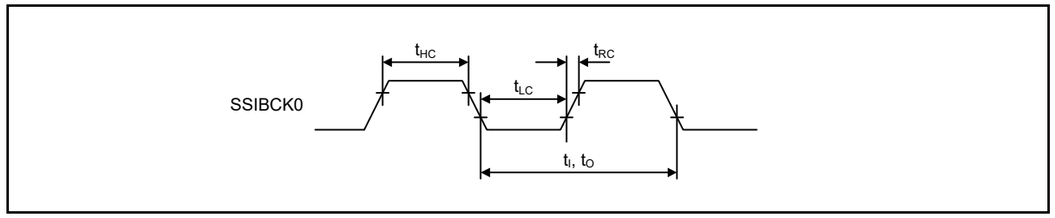

Figure 2.60 SSIE时钟输入输出时序

RA生态工作室

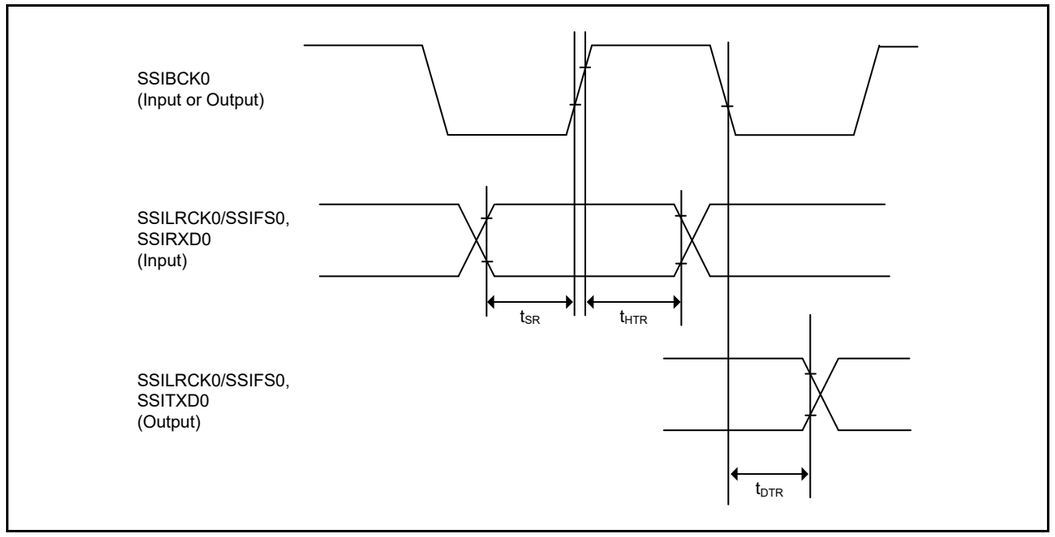

Figure 2.61 SSIE data transmit/receive timing (SSICR.BCKP = 0)

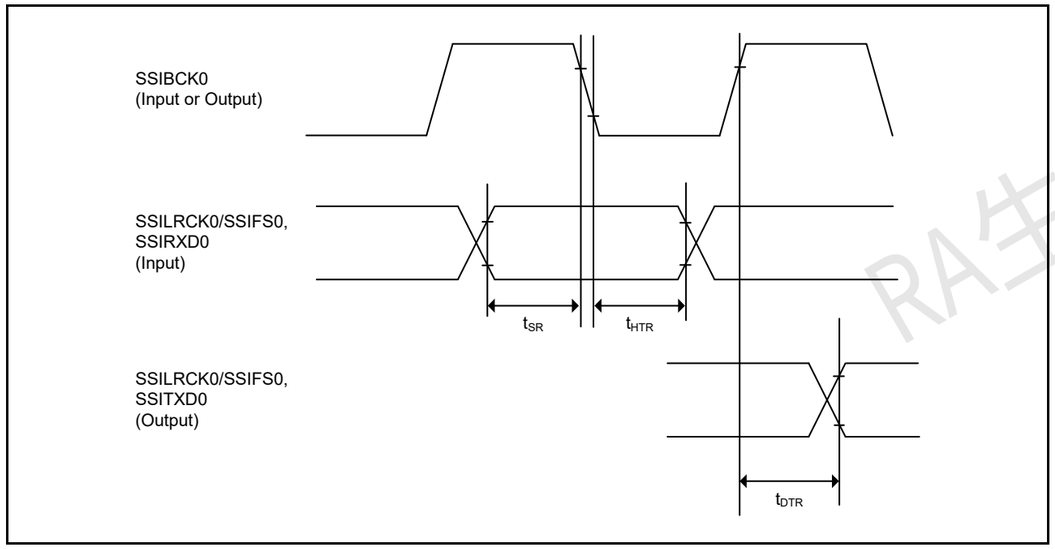

Figure 2.62 SSIE data transmit/receive timing (SSICR.BCKP = 1)

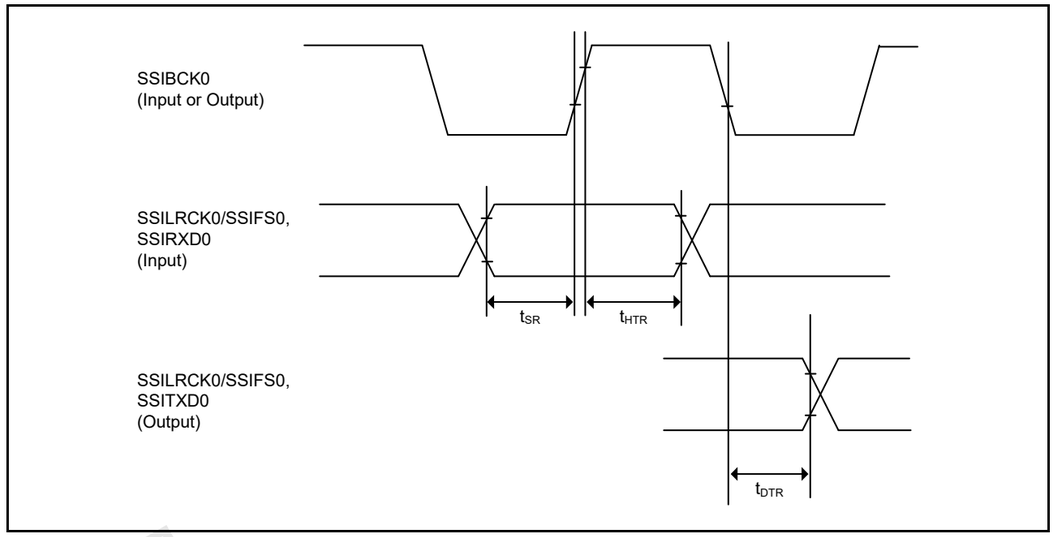

Figure 2.61 SSIE数据发送接收时序(SSICR.BCKP=0)

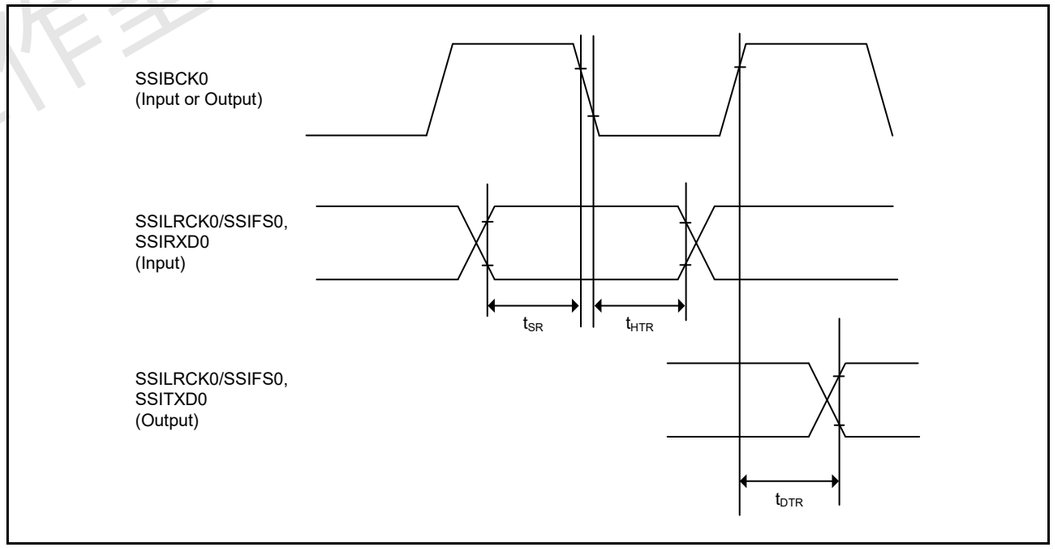

Figure 2.62 SSIE数据发送接收时序(SSICR.BCKP=1)

RA生态工作室

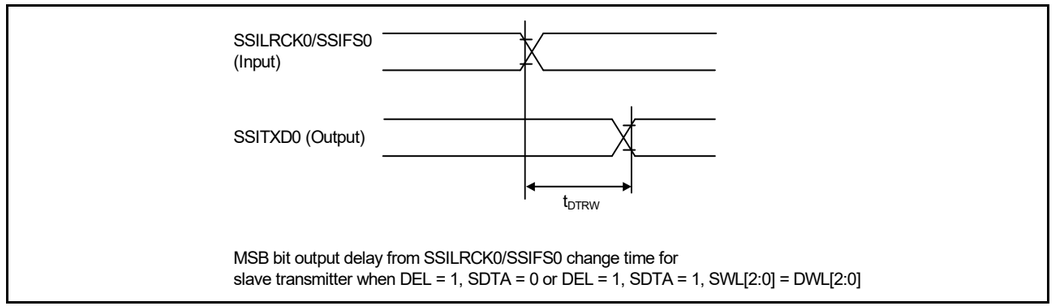

Figure 2.63 SSIE data output delay from SSILRCK0/SSIFS0 change time

2.3.12 CLKOUT Timing

Table 2.39 CLKOUT timing

Parameter			Symbol	Min	Max	Unit*1	Test conditions
CLKOUT	CLKOUT pin output cycle*1	VCC = 2.7 V or above	t_{Ccyc}	62.5	-	ns	Figure 2.64
		VCC = 1.8 V or above		125	-		
		VCC = 1.6 V or above		250	-		
	CLKOUT pin high pulse width*2	VCC = 2.7 V or above	t_{CH}	15	-	ns	
		VCC = 1.8 V or above		30	-		
		VCC = 1.6 V or above		150	-		
	CLKOUT pin low pulse width*2	VCC = 2.7 V or above	t_{CL}	15	-	ns	
		VCC = 1.8 V or above		30	-		
		VCC = 1.6 V or above		150	-		
	CLKOUT pin output rise time	VCC = 2.7 V or above	t_{Cr}	-	12	ns	
		VCC = 1.8 V or above		-	25		
		VCC = 1.6 V or above		-	50		
	CLKOUT pin output fall time	VCC = 2.7 V or above	t_{Cf}	-	12	ns	
		VCC = 1.8 V or above		-	25		
		VCC = 1.6 V or above		-	50		

Note 1. When the EXTAL external clock input or an oscillator is used with division by 1 (the CKOCR.CKOSEL[2:0] bits are 011b and the CKOCR.CKODIV[2:0] bits are 000b) to output from CLKOUT, the above should be satisfied with an input duty cycle of 45 to 55%.

Note 2. When the MOCO is selected as the clock output source (the CKOCR.CKOSEL[2:0] bits are 001b), set the clock output division ratio selection to be divided by 2 (the CKOCR.CKODIV[2:0] bits are 001b).

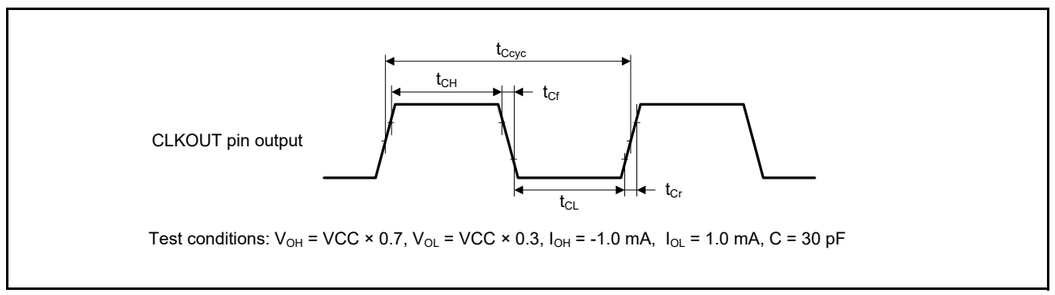

Figure 2.64 CLKOUT output timing

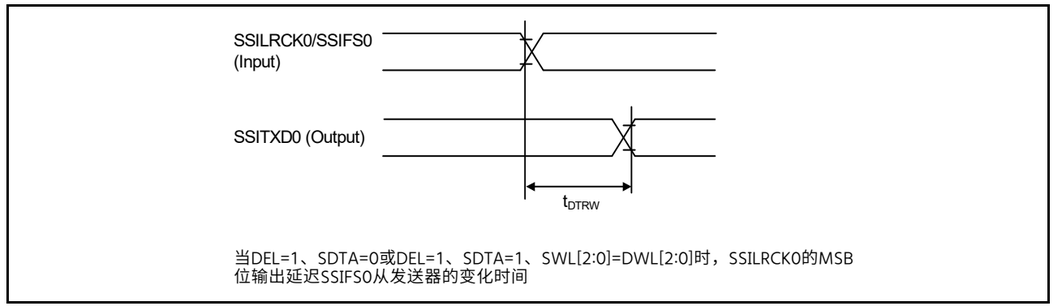

Figure 2.63 从SSILRCK0开始的SSIE数据输出延迟SSIFS0更改时间

2.3.12 CLKOUT Timing

Table 2.39 CLKOUT timing

Parameter			Symbol	Min	Max	Unit*1	测试条件
CLKOUT	CLKOUT引脚输出周期*1	VCC=2.7V或以上	t_{Ccyc}	62.5	-	ns	Figure 2.64
		VCC=1.8V或以上		125	-		
		VCC=1.6V或以上		250	-		
	CLKOUT引脚高脉冲宽度*2	VCC=2.7V或以上	t_{CH}	15	-	ns	
		VCC=1.8V或以上		30	-		
		VCC=1.6V或以上		150	-		
	CLKOUT引脚低脉冲宽度*2	VCC=2.7V或以上	t_{CL}	15	-	ns	
		VCC=1.8V或以上		30	-		
		VCC=1.6V或以上		150	-		
	CLKOUT引脚输出上升时间	VCC=2.7V或以上	t_{Cr}	-	12	ns	
		VCC=1.8V或以上		-	25		
		VCC=1.6V或以上		-	50		
	CLKOUT引脚输出下降时间	VCC=2.7V或以上	t_{Cf}	-	12	ns	
		VCC=1.8V或以上		-	25		
		VCC=1.6V或以上		-	50		

Note 1. 当使用EXTAL外部时钟输入或振荡器以1分频（CKOCR.CKOSEL[2:0]位为011b，CKOCR.CKODIV[2:0]位为000b）从CLKOUT输出时，上述应满足45至55%的输入占空比。

Note 2. WhentheMOCOisselectedastheclockoutputsource(theCKOCR.CKOSEL[2:0]bitsare001b) settheclockoutputdivisionratioselectio ntobedividedby2(theCKOCR.CKODIV[2:0]bitsare001b）。

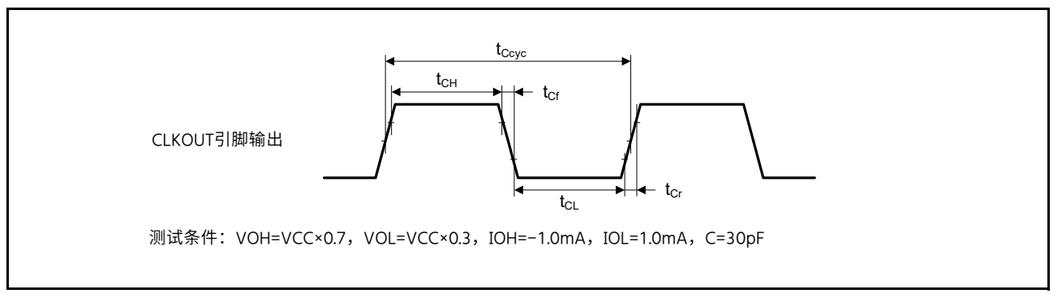

Figure 2.64 CLKOUT输出时序

RA生态工作室

2.4 USB Characteristics

2.4.1 USBFS Timing

Table 2.40 USB characteristics

Conditions: VCC = VCC_USB = 3.0 to 3.6 V, T_a = -20 to +85°C (USBCLKSEL = 1), T_a = -40 to +105°C (USBCLKSEL = 0)

Parameter			Symbol	Min	Max	Unit	Test conditions
Input characteristics	Input high level voltage		V_{IH}	2.0	-	V	-
	Input low level voltage		V_{IL}	-	0.8	V	-
	Differential input sensitivity		V_{DI}	0.2	-	V	|USB_DP - USB_DM |
	Differential common mode range		V_{CM}	0.8	2.5	V	-
Output characteristics	Output high level voltage		V_{OH}	2.8	VCC_USB	V	I_{OH} = -200 μA
	Output low level voltage		V_{OL}	0.0	0.3	V	I_{OL} = 2 mA
	Cross-over voltage		V_{CRS}	1.3	2.0	V	Figure 2.65, Figure 2.66, Figure 2.67
	Rise time	FS	t_r	4	20	ns	
		LS		75	300		
	Fall time	FS	t_f	4	20	ns	
		LS		75	300		
	Rise/fall time ratio	FS	t_r/t_f	90	111.11	%	
		LS		80	125		
	Output resistance		Z_{DRV}	28	44	Ω	(Adjusting the resistance of external elements is not necessary.)
VBUS characteristics	VBUS input voltage		V_{IH}	VCC × 0.8	-	V	-
			V_{IL}	-	VCC × 0.2	V	-
Pull-up, pull-down	Pull-down resistor		R_{PD}	14.25	24.80	kΩ	-
	Pull-up resistor		R_{PUI}	0.9	1.575	kΩ	During idle state
			R_{PUA}	1.425	3.09	kΩ	During reception
Battery Charging Specification Ver 1.2	D + sink current		I_{DP_SINK}	25	175	μA	-
	D - sink current		I_{DM_SINK}	25	175	μA	-
	DCD source current		I_{DP_SRC}	7	13	μA	-
	Data detection voltage		V_{DAT_REF}	0.25	0.4	V	-
	D + source voltage		V_{DP_SRC}	0.5	0.7	V	Output current = 250 μA
	D - source voltage		V_{DM_SRC}	0.5	0.7	V	Output current = 250 μA

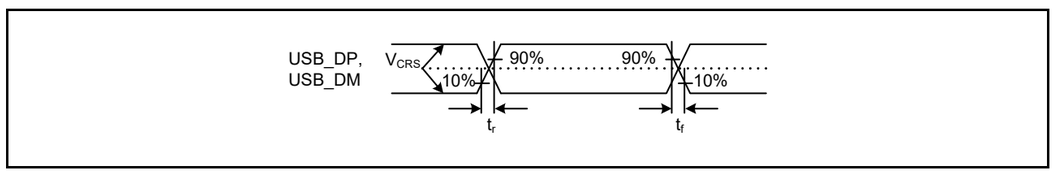

Figure 2.65 USB_DP and USB_DM output timing

2.4 USB特性

2.4.1 USBFS Timing

Table 2.40 USB特性

Conditions: VCC = VCC_USB = 3.0 to 3.6 V, T_a = -20 to +85°C (USBCLKSEL = 1), T_a = -40 to +105°C (USBCLKSEL = 0)

Parameter			Symbol	Min	Max	Unit	测试条件
输入特性	输入高电平电压		V_{IH}	2.0	-	V	-
	输入低电平电压		V_{IL}	-	0.8	V	-
	差分输入灵敏度		V_{DI}	0.2	-	V	|USB_DP - USB_DM |
	差分共模范围		V_{CM}	0.8	2.5	V	-
输出特性	输出高电平电压		V_{OH}	2.8	VCC_USB	V	I_{OH} = -200 μA
	输出低电平电压		V_{OL}	0.0	0.3	V	我OL=2毫安
	Cross-over voltage		V_{CRS}	1.3	2.0	V	Figure 2.65, Figure 2.66, Figure 2.67
	上升时间	FS	t_r	4	20	ns	
		LS		75	300		
	秋季时间	FS	t_f	4	20	ns	
		LS		75	300		
	上升下降时间比	FS	t_r/t_f	90	111.11	%	
		LS		80	125		
	输出电阻		Z_{DRV}	28	44	Ω	（无需调整外部元件的电阻。）
VBUS characteristics	VBUS输入电压		V_{IH}	VCC × 0.8	-	V	-
			V_{IL}	-	VCC × 0.2	V	-
Pull-up, pull-down	Pull-down resistor		R_{PD}	14.25	24.80	kΩ	-
	Pull-up resistor		R_{PUI}	0.9	1.575	kΩ	空闲状态期间
			R_{PUA}	1.425	3.09	kΩ	接待期间
电池充电 Specification Ver 1.2	D+灌电流		I_{DP_SINK}	25	175	μA	-
	D灌电流		I_{DM_SINK}	25	175	μA	-
	DCD源电流		I_{DP_SRC}	7	13	μA	-
	数据检测电压		V_{DAT_REF}	0.25	0.4	V	-
	D+源电压		V_{DP_SRC}	0.5	0.7	V	输出电流=250μA
	D源电压		V_{DM_SRC}	0.5	0.7	V	输出电流=250μA

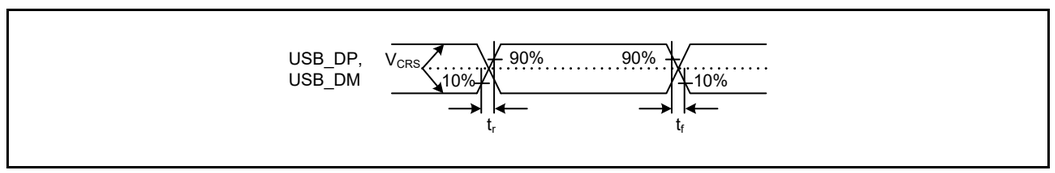

Figure 2.65 USB_DP和USB_DM输出时序

RA生态工作室

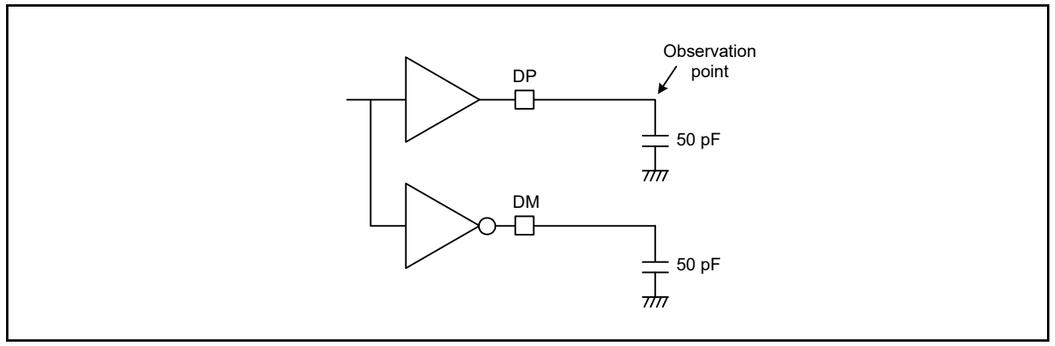

Figure 2.66 Test circuit for Full-Speed (FS) connection

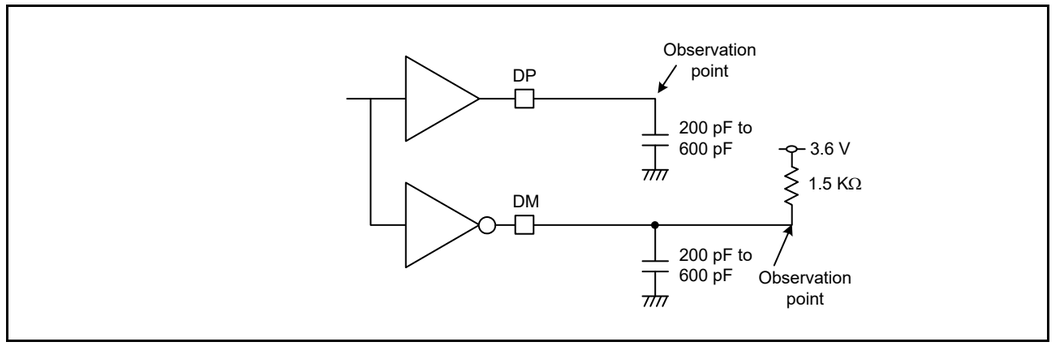

Figure 2.67 Test circuit for Low-Speed (LS) connection

2.4.2 USB External Supply

Table 2.41 USB regulator

Parameter		Min	Typ	Max	Unit	Test conditions
VCC_USB supply current	VCC_USB_LDO ≥ 3.8V	-	-	50	mA	-
	VCC_USB_LDO ≥ 4.5V	-	-	100	mA	-
VCC_USB supply voltage		3.0	-	3.6	V	-

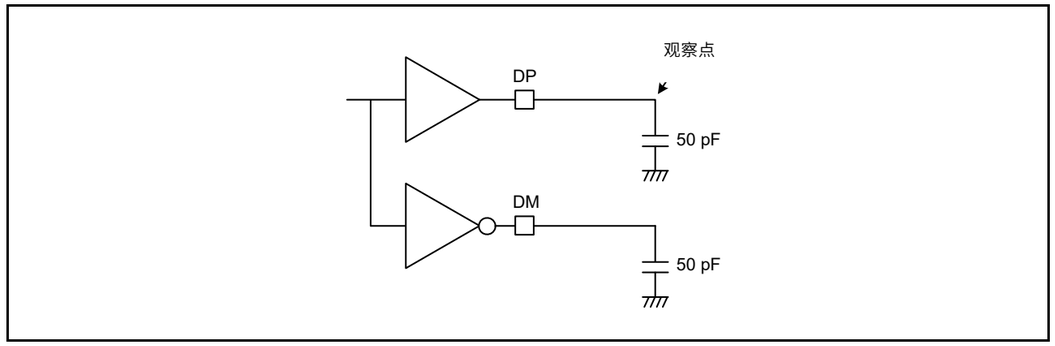

Figure 2.66 全速(FS)连接测试电路

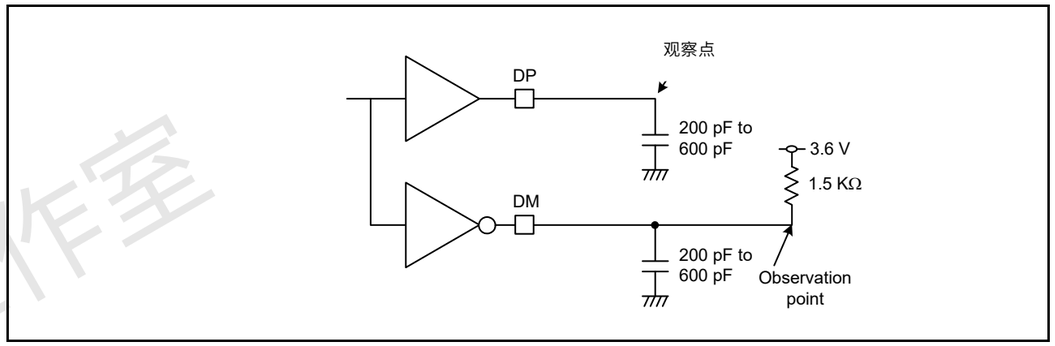

Figure 2.67 低速(LS)连接测试电路

2.4.2 USB外部电源

Table 2.41 USB稳压器

Parameter		Min	Typ	Max	Unit	测试条件
VCC_USB供电电流	VCC_USB_LDO ≥ 3.8V	-	-	50	mA	-
	VCC_USB_LDO ≥ 4.5V	-	-	100	mA	-
VCC_USB电源电压		3.0	-	3.6	V	-

RA生态工作室

2.5 ADC14 Characteristics

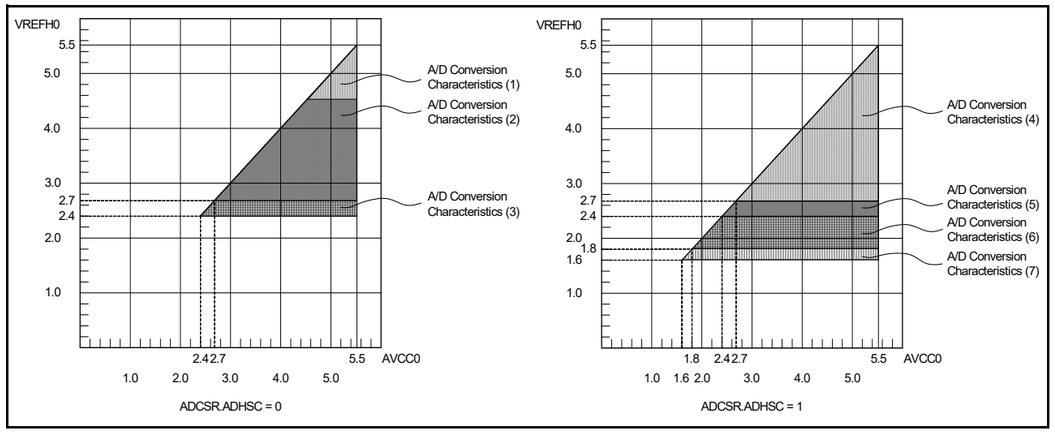

Figure 2.68 AVCC0 to VREFH0 voltage range

Table 2.42 A/D conversion characteristics (1) in high-speed A/D conversion mode (1 of 2)

Conditions: VCC = AVCC0 = 4.5 to 5.5 V, VREFH0 = 4.5 to 5.5 V
Reference voltage range applied to the VREFH0 and VREFL0.

Parameter		Min	Typ	Max	Unit	Test conditions
Frequency		1	-	64	MHz	-
Analog input capacitance*2	Cs	-	-	8 (reference data)	pF	High-precision channel
		-	-	9 (reference data)	pF	Normal-precision channel
Analog input resistance	Rs	-	-	2.5 (reference data)	kΩ	High-precision channel
		-	-	6.7 (reference data)	kΩ	Normal-precision channel
Analog input voltage range	Ain	0	-	VREFH0	V	-
12-bit mode						
Resolution		-	-	12	Bit	-
Conversion time*1 (Operation at PCLKC = 64 MHz)	Permissible signal source impedance Max. = 0.3 kΩ	0.70	-	-	μs	High-precision channel ADCSR.ADHSC = 0 ADSSTRn.SST[7:0] = 0Dh
		1.13	-	-	μs	Normal-precision channel ADCSR.ADHSC = 0 ADSSTRn.SST[7:0] = 28h
Offset error		-	±0.5	±4.5	LSB	High-precision channel
				±6.0	LSB	Other than above
Full-scale error		-	±0.75	±4.5	LSB	High-precision channel
				±6.0	LSB	Other than above
Quantization error		-	±0.5	-	LSB	-
Absolute accuracy		-	±1.25	±5.0	LSB	High-precision channel
				±8.0	LSB	Other than above
DNL differential nonlinearity error		-	±1.0	-	LSB	-
INL integral nonlinearity error		-	±1.0	±3.0	LSB	-
14-bit mode						
Resolution		-	-	14	Bit	-

2.5 ADC14 Characteristics

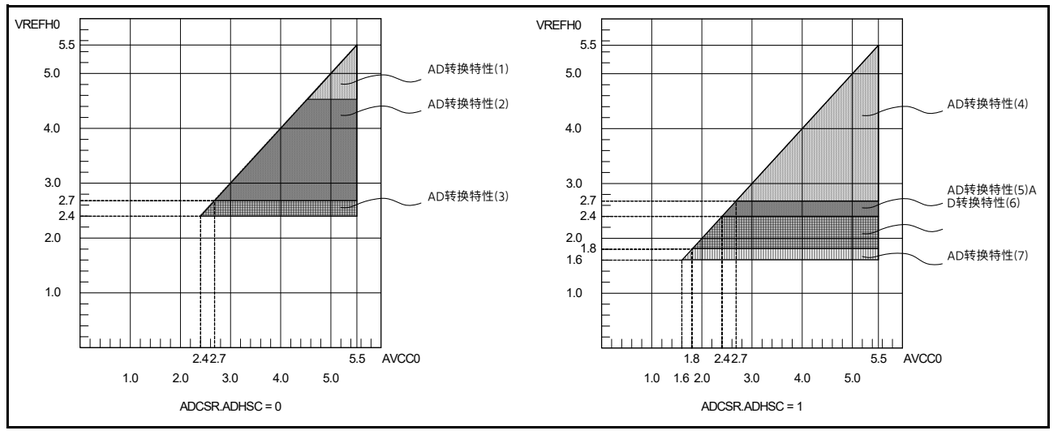

Figure 2.68 AVCC0至VREFH0电压范围

Table 2.42 高速AD转换模式下的AD转换特性(1)(1of2)

Conditions: VCC = AVCC0 = 4.5 to 5.5 V, VREFH0 = 4.5 to 5.5 V
应用于VREFH0和VREFL0的参考电压范围。

Parameter		Min	Typ	Max	Unit	测试条件
Frequency		1	-	64	MHz	-
模拟输入电容*2	Cs	-	-	8 (reference data)	pF	High-precision channel
		-	-	9 (reference data)	pF	Normal-precision channel
模拟输入电阻	Rs	-	-	2.5 (reference data)	kΩ	High-precision channel
		-	-	6.7 (reference data)	kΩ	Normal-precision channel
模拟输入电压范围	Ain	0	-	VREFH0	V	-
12-bit mode						
Resolution		-	-	12	Bit	-
转换时间*1（在PCLKC=64MHz下运行）	允许的信号源阻抗 Max.=0.3kΩ	0.70	-	-	μs	High-precision channel ADCSR.ADHSC = 0 ADSSTRn.SST[7:0] = 0Dh
		1.13	-	-	μs	Normal-precision channel ADCSR.ADHSC = 0 ADSSTRn.SST[7:0] = 28h
偏移误差		-	±0.5	±4.5	LSB	High-precision channel
				±6.0	LSB	上述以外
Full-scale error		-	±0.75	±4.5	LSB	High-precision channel
				±6.0	LSB	上述以外
量化误差		-	±0.5	-	LSB	-
绝对精度		-	±1.25	±5.0	LSB	High-precision channel
				±8.0	LSB	上述以外
DNL微分非线性误差		-	±1.0	-	LSB	-
INL积分非线性误差		-	±1.0	±3.0	LSB	-
14-bit mode						
Resolution		-	-	14	Bit	-

RA生态工作室

Table 2.42 A/D conversion characteristics (1) in high-speed A/D conversion mode (2 of 2)

Conditions: VCC = AVCC0 = 4.5 to 5.5 V, VREFH0 = 4.5 to 5.5 V
Reference voltage range applied to the VREFH0 and VREFL0.

Parameter		Min	Typ	Max	Unit	Test conditions
Conversion time*1 (Operation at PCLKC = 64 MHz)	Permissible signal source impedance Max. = 0.3 kΩ	0.80	-	-	μs	High-precision channel ADCSR.ADHSC = 0 ADSSTRn.SST[7:0] = 0Dh
		1.22	-	-	μs	Normal-precision channel ADCSR.ADHSC = 0 ADSSTRn.SST[7:0] = 28h
Offset error		-	±2.0	±18	LSB	High-precision channel
				±24.0	LSB	Other than above
Full-scale error		-	±3.0	±18	LSB	High-precision channel
				±24.0	LSB	Other than above
Quantization error		-	±0.5	-	LSB	-
Absolute accuracy		-	±5.0	±20	LSB	High-precision channel
				±32.0	LSB	Other than above
DNL differential nonlinearity error		-	±4.0	-	LSB	-
INL integral nonlinearity error		-	±4.0	±12.0	LSB	-

Note: The characteristics apply when no pin functions other than 14-bit A/D converter input are used. Absolute accuracy does not include quantization errors. Offset error, full-scale error, DNL differential nonlinearity error, and INL integral nonlinearity error do not include quantization errors.

Note 1. The conversion time is the sum of the sampling time and the comparison time. The number of sampling states is indicated for the test conditions.

Note 2. Except for I/O input capacitance (C_{in}), see section 2.2.4, I/O V_{OH}, V_{OL}, and Other Characteristics.

Table 2.43 A/D conversion characteristics (2) in high-speed A/D conversion mode (1 of 2)

Conditions: VCC = AVCC0 = 2.7 to 5.5 V, VREFH0 = 2.7 to 5.5 V
Reference voltage range applied to the VREFH0 and VREFL0.

Parameter		Min	Typ	Max	Unit	Test conditions
Frequency		1	-	48	MHz	-
Analog input capacitance*2	Cs	-	-	8 (reference data)	pF	High-precision channel
		-	-	9 (reference data)	pF	Normal-precision channel
Analog input resistance	Rs	-	-	2.5 (reference data)	kΩ	High-precision channel
		-	-	6.7 (reference data)	kΩ	Normal-precision channel
Analog input voltage range	Ain	0	-	VREFH0	V	-
12-bit mode						
Resolution		-	-	12	Bit	-
Conversion time*1 (Operation at PCLKC = 48 MHz)	Permissible signal source impedance Max. = 0.3 kΩ	0.94	-	-	μs	High-precision channel ADCSR.ADHSC = 0 ADSSTRn.SST[7:0] = 0Dh
		1.50	-	-	μs	Normal-precision channel ADCSR.ADHSC = 0 ADSSTRn.SST[7:0] = 28h
Offset error		-	±0.5	±4.5	LSB	High-precision channel
				±6.0	LSB	Other than above
Full-scale error		-	±0.75	±4.5	LSB	High-precision channel
				±6.0	LSB	Other than above
Quantization error		-	±0.5	-	LSB	-
Absolute accuracy		-	±1.25	±5.0	LSB	High-precision channel
				±8.0	LSB	Other than above
DNL differential nonlinearity error		-	±1.0	-	LSB	-
INL integral nonlinearity error		-	±1.0	±3.0	LSB	-

Table 2.42 高速AD转换模式下的AD转换特性(1)(2of2)

Conditions: VCC = AVCC0 = 4.5 to 5.5 V, VREFH0 = 4.5 to 5.5 V
应用于VREFH0和VREFL0的参考电压范围。

Parameter		Min	Typ	Max	Unit	测试条件
转换时间*1（在PCLKC=64MHz下运行）	允许的信号源阻抗 Max.=0.3kΩ	0.80	-	-	μs	High-precision channel ADCSR.ADHSC = 0 ADSSTRn.SST[7:0] = 0Dh
		1.22	-	-	μs	Normal-precision channel ADCSR.ADHSC = 0 ADSSTRn.SST[7:0] = 28h
偏移误差		-	±2.0	±18	LSB	High-precision channel
				±24.0	LSB	上述以外
Full-scale error		-	±3.0	±18	LSB	High-precision channel
				±24.0	LSB	上述以外
量化误差		-	±0.5	-	LSB	-
绝对精度		-	±5.0	±20	LSB	High-precision channel
				±32.0	LSB	上述以外
DNL微分非线性误差		-	±4.0	-	LSB	-
INL积分非线性误差		-	±4.0	±12.0	LSB	-

Note: 该特性适用于不使用除14位AD转换器输入以外的引脚功能时。绝对精度不包括量化误差。偏移误差、满量程误差、DNL微分非线性误差和INL积分非线性误差不包括量化误差。

Note 1. 转换时间是采样时间和比较时间的总和。针对测试条件指示采样状态的数量。

Note 2. 除IO输入电容(Cin)外，请参阅第2.2.4节，IOVOH、VOL和其他特性。

Table 2.43 高速AD转换模式下的AD转换特性(2)(1of2)

Conditions: VCC = AVCC0 = 2.7 to 5.5 V, VREFH0 = 2.7 to 5.5 V
应用于VREFH0和VREFL0的参考电压范围。

Parameter		Min	Typ	Max	Unit	测试条件
Frequency		1	-	48	MHz	-
模拟输入电容*2	Cs	-	-	8 (reference data)	pF	High-precision channel
		-	-	9 (reference data)	pF	Normal-precision channel
模拟输入电阻	Rs	-	-	2.5 (reference data)	kΩ	High-precision channel
		-	-	6.7 (reference data)	kΩ	Normal-precision channel
模拟输入电压范围	Ain	0	-	VREFH0	V	-
12-bit mode						
Resolution		-	-	12	Bit	-
Conversion time*1 (Operation at PCLKC = 48 MHz)	允许的信号源阻抗 Max.=0.3kΩ	0.94	-	-	μs	High-precision channel ADCSR.ADHSC = 0 ADSSTRn.SST[7:0] = 0Dh
		1.50	-	-	μs	Normal-precision channel ADCSR.ADHSC = 0 ADSSTRn.SST[7:0] = 28h
偏移误差		-	±0.5	±4.5	LSB	High-precision channel
				±6.0	LSB	上述以外
Full-scale error		-	±0.75	±4.5	LSB	High-precision channel
				±6.0	LSB	上述以外
量化误差		-	±0.5	-	LSB	-
绝对精度		-	±1.25	±5.0	LSB	High-precision channel
				±8.0	LSB	上述以外
DNL微分非线性误差		-	±1.0	-	LSB	-
INL积分非线性误差		-	±1.0	±3.0	LSB	-

Table 2.43 A/D conversion characteristics (2) in high-speed A/D conversion mode (2 of 2)

Conditions: VCC = AVCC0 = 2.7 to 5.5 V, VREFH0 = 2.7 to 5.5 V
Reference voltage range applied to the VREFH0 and VREFL0.

Parameter		Min	Typ	Max	Unit	Test conditions
14-bit mode						
Resolution		-	-	14	Bit	-
Conversion time*1 (Operation at PCLKC = 48 MHz)	Permissible signal source impedance Max. = 0.3 kΩ	1.06	-	-	μs	High-precision channel ADCSR.ADHSC = 0 ADSSTRn.SST[7:0] = 0Dh
		1.63	-	-	μs	Normal-precision channel ADCSR.ADHSC = 0 ADSSTRn.SST[7:0] = 28h
Offset error		-	±2.0	±18	LSB	High-precision channel
				±24.0	LSB	Other than above
Full-scale error		-	±3.0	±18	LSB	High-precision channel
				±24.0	LSB	Other than above
Quantization error		-	±0.5	-	LSB	-
Absolute accuracy		-	±5.0	±20	LSB	High-precision channel
				±32.0	LSB	Other than above
DNL differential nonlinearity error		-	±4.0	-	LSB	-
INL integral nonlinearity error		-	±4.0	±12.0	LSB	-

Note: The characteristics apply when no pin functions other than 14-bit A/D converter input are used. Absolute accuracy does not include quantization errors. Offset error, full-scale error, DNL differential nonlinearity error, and INL integral nonlinearity error do not include quantization errors.

Note 1. The conversion time is the sum of the sampling time and the comparison time. The number of sampling states is indicated for the test conditions.

Note 2. Except for I/O input capacitance (C_{in}), see section 2.2.4, I/O V_{OH}, V_{OL}, and Other Characteristics.

Table 2.44 A/D conversion characteristics (3) in high-speed A/D conversion mode (1 of 2)

Conditions: VCC = AVCC0 = 2.4 to 5.5 V, VREFH0 = 2.4 to 5.5 V
Reference voltage range applied to the VREFH0 and VREFL0.

Parameter		Min	Typ	Max	Unit	Test conditions
Frequency		1	-	32	MHz	-
Analog input capacitance*2	Cs	-	-	8 (reference data)	pF	High-precision channel
		-	-	9 (reference data)	pF	Normal-precision channel
Analog input resistance	Rs	-	-	2.5 (reference data)	kΩ	High-precision channel
		-	-	6.7 (reference data)	kΩ	Normal-precision channel
Analog input voltage range	Ain	0	-	VREFH0	V	-
12-bit mode						
Resolution		-	-	12	Bit	-
Conversion time*1 (Operation at PCLKC = 32 MHz)	Permissible signal source impedance Max. = 1.3 kΩ	1.41	-	-	μs	High-precision channel ADCSR.ADHSC = 0 ADSSTRn.SST[7:0] = 0Dh
		2.25	-	-	μs	Normal-precision channel ADCSR.ADHSC = 0 ADSSTRn.SST[7:0] = 28h
Offset error		-	±0.5	±4.5	LSB	High-precision channel
				±6.0	LSB	Other than above
Full-scale error		-	±0.75	±4.5	LSB	High-precision channel
				±6.0	LSB	Other than above
Quantization error		-	±0.5	-	LSB	-
Absolute accuracy		-	±1.25	±5.0	LSB	High-precision channel
				±8.0	LSB	Other than above

Table 2.43 高速AD转换模式下的AD转换特性(2)(2of2)

Conditions: VCC = AVCC0 = 2.7 to 5.5 V, VREFH0 = 2.7 to 5.5 V
应用于VREFH0和VREFL0的参考电压范围。

Parameter		Min	Typ	Max	Unit	测试条件
14-bit mode						
Resolution		-	-	14	Bit	-
转换时间*1（在PCLKC=48MHz下运行）	允许的信号源阻抗Max.=0.3kΩ	1.06	-	-	μs	High-precision channel ADCSR.ADHSC = 0 ADSSTRn.SST[7:0] = 0Dh
		1.63	-	-	μs	Normal-precision channel ADCSR.ADHSC = 0 ADSSTRn.SST[7:0] = 28h
偏移误差		-	±2.0	±18	LSB	High-precision channel
				±24.0	LSB	上述以外
Full-scale error		-	±3.0	±18	LSB	High-precision channel
				±24.0	LSB	上述以外
量化误差		-	±0.5	-	LSB	-
绝对精度		-	±5.0	±20	LSB	High-precision channel
				±32.0	LSB	上述以外
DNL微分非线性误差		-	±4.0	-	LSB	-
INL积分非线性误差		-	±4.0	±12.0	LSB	-

Note: 该特性适用于不使用除14位AD转换器输入以外的引脚功能时。绝对精度不包括量化误差。偏移误差、满量程误差、DNL微分非线性误差和INL积分非线性误差不包括量化误差。

Note 1. 转换时间是采样时间和比较时间的总和。针对测试条件指示采样状态的数量。

Note 2. 除IO输入电容(Cin)外，请参阅第2.2.4节，IOVOH、VOL和其他特性。

Table 2.44 高速AD转换模式下的AD转换特性(3)(1of2)

Conditions: VCC = AVCC0 = 2.4 to 5.5 V, VREFH0 = 2.4 to 5.5 V
应用于VREFH0和VREFL0的参考电压范围。

Parameter		Min	Typ	Max	Unit	测试条件
Frequency		1	-	32	MHz	-
模拟输入电容*2	Cs	-	-	8 (reference data)	pF	High-precision channel
		-	-	9 (reference data)	pF	Normal-precision channel
模拟输入电阻	Rs	-	-	2.5 (reference data)	kΩ	High-precision channel
		-	-	6.7 (reference data)	kΩ	Normal-precision channel
模拟输入电压范围	Ain	0	-	VREFH0	V	-
12-bit mode						
Resolution		-	-	12	Bit	-
转换时间*1（在PCLKC=32MHz下运行）	允许的信号源阻抗Max.=1.3kΩ	1.41	-	-	μs	High-precision channel ADCSR.ADHSC = 0 ADSSTRn.SST[7:0] = 0Dh
		2.25	-	-	μs	Normal-precision channel ADCSR.ADHSC = 0 ADSSTRn.SST[7:0] = 28h
偏移误差		-	±0.5	±4.5	LSB	High-precision channel
				±6.0	LSB	上述以外
Full-scale error		-	±0.75	±4.5	LSB	High-precision channel
				±6.0	LSB	上述以外
量化误差		-	±0.5	-	LSB	-
绝对精度		-	±1.25	±5.0	LSB	High-precision channel
				±8.0	LSB	上述以外

RA生态工作室

Table 2.44 A/D conversion characteristics (3) in high-speed A/D conversion mode (2 of 2)

Conditions: VCC = AVCC0 = 2.4 to 5.5 V, VREFH0 = 2.4 to 5.5 V
Reference voltage range applied to the VREFH0 and VREFL0.

Parameter		Min	Typ	Max	Unit	Test conditions
DNL differential nonlinearity error		-	±1.0	-	LSB	-
INL integral nonlinearity error		-	±1.0	±3.0	LSB	-
14-bit mode						
Resolution		-	-	14	Bit	-
Conversion time*1 (Operation at PCLKC = 32 MHz)	Permissible signal source impedance Max. = 1.3 kΩ	1.59	-	-	μs	High-precision channel ADCSR.ADHSC = 0 ADSSTRn.SST[7:0] = 0Dh
		2.44	-	-	μs	Normal-precision channel ADCSR.ADHSC = 0 ADSSTRn.SST[7:0] = 28h
Offset error		-	±2.0	±18	LSB	High-precision channel
				±24.0	LSB	Other than above
Full-scale error		-	±3.0	±18	LSB	High-precision channel
				±24.0	LSB	Other than above
Quantization error		-	±0.5	-	LSB	-
Absolute accuracy		-	±5.0	±20	LSB	High-precision channel
				±32.0	LSB	Other than above
DNL differential nonlinearity error		-	±4.0	-	LSB	-
INL integral nonlinearity error		-	±4.0	±12.0	LSB	-

Note: The characteristics apply when no pin functions other than 14-bit A/D converter input are used. Absolute accuracy does not include quantization errors. Offset error, full-scale error, DNL differential nonlinearity error, and INL integral nonlinearity error do not include quantization errors.

Note 1. The conversion time is the sum of the sampling time and the comparison time. The number of sampling states is indicated for the test conditions.

Note 2. Except for I/O input capacitance (C_{in}), see section 2.2.4, I/O V_{OH}, V_{OL}, and Other Characteristics.

Table 2.45 A/D conversion characteristics (4) in low power A/D conversion mode (1 of 2)

Conditions: VCC = AVCC0 = 2.7 to 5.5 V, VREFH0 = 2.7 to 5.5 V
Reference voltage range applied to the VREFH0 and VREFL0.

Parameter		Min	Typ	Max	Unit	Test conditions
Frequency		1	-	24	MHz	-
Analog input capacitance*2	Cs	-	-	8 (reference data)	pF	High-precision channel
		-	-	9 (reference data)	pF	Normal-precision channel
Analog input resistance	Rs	-	-	2.5 (reference data)	kΩ	High-precision channel
		-	-	6.7 (reference data)	kΩ	Normal-precision channel
Analog input voltage range	Ain	0	-	VREFH0	V	-
12-bit mode						
Resolution		-	-	12	Bit	-
Conversion time*1 (Operation at PCLKC = 24 MHz)	Permissible signal source impedance Max. = 1.1 kΩ	2.25	-	-	μs	High-precision channel ADCSR.ADHSC = 1 ADSSTRn.SST[7:0] = 0Dh
		3.38	-	-	μs	Normal-precision channel ADCSR.ADHSC = 1 ADSSTRn.SST[7:0] = 28h
Offset error		-	±0.5	±4.5	LSB	High-precision channel
				±6.0	LSB	Other than above
Full-scale error		-	±0.75	±4.5	LSB	High-precision channel
				±6.0	LSB	Other than above
Quantization error		-	±0.5	-	LSB	-

Table 2.44 高速AD转换模式下的AD转换特性(3)(2of2)

Conditions: VCC = AVCC0 = 2.4 to 5.5 V, VREFH0 = 2.4 to 5.5 V
应用于VREFH0和VREFL0的参考电压范围。

Parameter		Min	Typ	Max	Unit	测试条件
DNL微分非线性误差		-	±1.0	-	LSB	-
INL积分非线性误差		-	±1.0	±3.0	LSB	-
14-bit mode						
Resolution		-	-	14	Bit	-
转换时间*1（在PCLKC=32MHz下运行）	允许的信号源阻抗Max.=1.3kΩ	1.59	-	-	μs	High-precision channel ADCSR.ADHSC = 0 ADSSTRn.SST[7:0] = 0Dh
		2.44	-	-	μs	Normal-precision channel ADCSR.ADHSC = 0 ADSSTRn.SST[7:0] = 28h
偏移误差		-	±2.0	±18	LSB	High-precision channel
				±24.0	LSB	上述以外
Full-scale error		-	±3.0	±18	LSB	High-precision channel
				±24.0	LSB	上述以外
量化误差		-	±0.5	-	LSB	-
绝对精度		-	±5.0	±20	LSB	High-precision channel
				±32.0	LSB	上述以外
DNL微分非线性误差		-	±4.0	-	LSB	-
INL积分非线性误差		-	±4.0	±12.0	LSB	-

Note: 该特性适用于不使用除14位AD转换器输入以外的引脚功能时。绝对精度不包括量化误差。偏移误差、满量程误差、DNL微分非线性误差和INL积分非线性误差不包括量化误差。

Note 1. 转换时间是采样时间和比较时间的总和。针对测试条件指示采样状态的数量。

Note 2. 除IO输入电容(Cin)外，请参阅第2.2.4节，IOVOH、VOL和其他特性。

Table 2.45 低功耗AD转换模式下的AD转换特性(4)(1of2)

Conditions: VCC = AVCC0 = 2.7 to 5.5 V, VREFH0 = 2.7 to 5.5 V
应用于VREFH0和VREFL0的参考电压范围。

Parameter		Min	Typ	Max	Unit	测试条件
Frequency		1	-	24	MHz	-
模拟输入电容*2	Cs	-	-	8 (reference data)	pF	High-precision channel
		-	-	9 (reference data)	pF	Normal-precision channel
模拟输入电阻	Rs	-	-	2.5 (reference data)	kΩ	High-precision channel
		-	-	6.7 (reference data)	kΩ	Normal-precision channel
模拟输入电压范围	Ain	0	-	VREFH0	V	-
12-bit mode						
Resolution		-	-	12	Bit	-
转换时间*1（在PCLKC=24MHz下运行）	允许的信号源阻抗Max.=1.1kΩ	2.25	-	-	μs	High-precision channel ADCSR.ADHSC = 1 ADSSTRn.SST[7:0] = 0Dh
		3.38	-	-	μs	Normal-precision channel ADCSR.ADHSC = 1 ADSSTRn.SST[7:0] = 28h
偏移误差		-	±0.5	±4.5	LSB	High-precision channel
				±6.0	LSB	上述以外
Full-scale error		-	±0.75	±4.5	LSB	High-precision channel
				±6.0	LSB	上述以外
量化误差		-	±0.5	-	LSB	-

RA生态工作室

Table 2.45 A/D conversion characteristics (4) in low power A/D conversion mode (2 of 2)
Conditions: VCC = AVCC0 = 2.7 to 5.5 V, VREFH0 = 2.7 to 5.5 V
Reference voltage range applied to the VREFH0 and VREFL0.

Parameter		Min	Typ	Max	Unit	Test conditions
Absolute accuracy		-	±1.25	±5.0	LSB	High-precision channel
				±8.0	LSB	Other than above
DNL differential nonlinearity error		-	±1.0	-	LSB	-
INL integral nonlinearity error		-	±1.0	±3.0	LSB	-
14-bit mode						
Resolution		-	-	14	Bit	-
Conversion time*1 (Operation at PCLKC = 24 MHz)	Permissible signal source impedance Max. = 1.1 kΩ	2.50	-	-	μs	High-precision channel ADCSR.ADHSC = 1 ADSSTRn.SST[7:0] = 0Dh
		3.63	-	-	μs	Normal-precision channel ADCSR.ADHSC = 1 ADSSTRn.SST[7:0] = 28h
Offset error		-	±2.0	±18	LSB	High-precision channel
				±24.0	LSB	Other than above
Full-scale error		-	±3.0	±18	LSB	High-precision channel
				±24.0	LSB	Other than above
Quantization error		-	±0.5	-	LSB	-
Absolute accuracy		-	±5.0	±20	LSB	High-precision channel
				±32.0	LSB	Other than above
DNL differential nonlinearity error		-	±4.0	-	LSB	-
INL integral nonlinearity error		-	±4.0	±12.0	LSB	-

Note: The characteristics apply when no pin functions other than 14-bit A/D converter input are used. Absolute accuracy does not include quantization errors. Offset error, full-scale error, DNL differential nonlinearity error, and INL integral nonlinearity error do not include quantization errors.
Note 1. The conversion time is the sum of the sampling time and the comparison time. The number of sampling states is indicated for the test conditions.
Note 2. Except for I/O input capacitance (C_{in}), see section 2.2.4, I/O V_{OH}, V_{OL}, and Other Characteristics.

Table 2.46 A/D conversion characteristics (5) in low power A/D conversion mode (1 of 2)
Conditions: VCC = AVCC0 = 2.4 to 5.5 V, VREFH0 = 2.4 to 5.5 V
Reference voltage range applied to the VREFH0 and VREFL0.

Parameter		Min	Typ	Max	Unit	Test conditions
Frequency		1	-	16	MHz	-
Analog input capacitance*2	Cs	-	-	8 (reference data)	pF	High-precision channel
		-	-	9 (reference data)	pF	Normal-precision channel
Analog input resistance	Rs	-	-	2.5 (reference data)	kΩ	High-precision channel
		-	-	6.7 (reference data)	kΩ	Normal-precision channel
Analog input voltage range	Ain	0	-	VREFH0	V	-
12-bit mode						
Resolution		-	-	12	Bit	-
Conversion time*1 (Operation at PCLKC = 16 MHz)	Permissible signal source impedance Max. = 2.2 kΩ	3.38	-	-	μs	High-precision channel ADCSR.ADHSC = 1 ADSSTRn.SST[7:0] = 0Dh
		5.06	-	-	μs	Normal-precision channel ADCSR.ADHSC = 1 ADSSTRn.SST[7:0] = 28h
Offset error		-	±0.5	±4.5	LSB	High-precision channel
				±6.0	LSB	Other than above

Table 2.45 低功耗AD转换模式下的AD转换特性(4)(2of2)
Conditions: VCC = AVCC0 = 2.7 to 5.5 V, VREFH0 = 2.7 to 5.5 V
应用于VREFH0和VREFL0的参考电压范围。

Parameter		Min	Typ	Max	Unit	测试条件
绝对精度		-	±1.25	±5.0	LSB	High-precision channel
				±8.0	LSB	上述以外
DNL微分非线性误差		-	±1.0	-	LSB	-
INL积分非线性误差		-	±1.0	±3.0	LSB	-
14-bit mode						
Resolution		-	-	14	Bit	-
转换时间*1（在PCLKC=24MHz下运行）	允许的信号源阻抗Max.=1.1kΩ	2.50	-	-	μs	High-precision channel ADCSR.ADHSC = 1 ADSSTRn.SST[7:0] = 0Dh
		3.63	-	-	μs	Normal-precision channel ADCSR.ADHSC = 1 ADSSTRn.SST[7:0] = 28h
偏移误差		-	±2.0	±18	LSB	High-precision channel
				±24.0	LSB	上述以外
Full-scale error		-	±3.0	±18	LSB	High-precision channel
				±24.0	LSB	上述以外
量化误差		-	±0.5	-	LSB	-
绝对精度		-	±5.0	±20	LSB	High-precision channel
				±32.0	LSB	上述以外
DNL微分非线性误差		-	±4.0	-	LSB	-
INL积分非线性误差		-	±4.0	±12.0	LSB	-

Note: 该特性适用于不使用除14位AD转换器输入以外的引脚功能时。绝对精度不包括量化误差。偏移误差、满量程误差、DNL微分非线性误差和INL积分非线性误差不包括量化误差。
Note 1. 转换时间是采样时间和比较时间的总和。针对测试条件指示采样状态的数量。
Note 2. 除IO输入电容(Cin)外，请参阅第2.2.4节，IOVOH、VOL和其他特性。

Table 2.46 低功耗AD转换模式下的AD转换特性(5)(1of2)
Conditions: VCC = AVCC0 = 2.4 to 5.5 V, VREFH0 = 2.4 to 5.5 V
应用于VREFH0和VREFL0的参考电压范围。

Parameter		Min	Typ	Max	Unit	测试条件
Frequency		1	-	16	MHz	-
模拟输入电容*2	Cs	-	-	8 (reference data)	pF	High-precision channel
		-	-	9 (reference data)	pF	Normal-precision channel
模拟输入电阻	Rs	-	-	2.5 (reference data)	kΩ	High-precision channel
		-	-	6.7 (reference data)	kΩ	Normal-precision channel
模拟输入电压范围	Ain	0	-	VREFH0	V	-
12-bit mode						
Resolution		-	-	12	Bit	-
转换时间*1（在PCLKC=16MHz下运行）	允许的信号源阻抗Max.=2.2kΩ	3.38	-	-	μs	High-precision channel ADCSR.ADHSC = 1 ADSSTRn.SST[7:0] = 0Dh
		5.06	-	-	μs	Normal-precision channel ADCSR.ADHSC = 1 ADSSTRn.SST[7:0] = 28h
偏移误差		-	±0.5	±4.5	LSB	High-precision channel
				±6.0	LSB	上述以外

RA生态工作室

Table 2.46 A/D conversion characteristics (5) in low power A/D conversion mode (2 of 2)
Conditions: VCC = AVCC0 = 2.4 to 5.5 V, VREFH0 = 2.4 to 5.5 V
Reference voltage range applied to the VREFH0 and VREFL0.

Parameter		Min	Typ	Max	Unit	Test conditions
Full-scale error		-	±0.75	±4.5	LSB	High-precision channel
				±6.0	LSB	Other than above
Quantization error		-	±0.5	-	LSB	-
Absolute accuracy		-	±1.25	±5.0	LSB	High-precision channel
				±8.0	LSB	Other than above
DNL differential nonlinearity error		-	±1.0	-	LSB	-
INL integral nonlinearity error		-	±1.0	±3.0	LSB	-
14-bit mode						
Resolution		-	-	14	Bit	-
Conversion time*1 (Operation at PCLKC = 16 MHz)	Permissible signal source impedance Max. = 2.2 kΩ	3.75	-	-	μs	High-precision channel ADCSR.ADHSC = 1 ADSSTRn.SST[7:0] = 0Dh
		5.44	-	-	μs	Normal-precision channel ADCSR.ADHSC = 1 ADSSTRn.SST[7:0] = 28h
Offset error		-	±2.0	±18	LSB	High-precision channel
				±24.0	LSB	Other than above
Full-scale error		-	±3.0	±18	LSB	High-precision channel
				±24.0	LSB	Other than above
Quantization error		-	±0.5	-	LSB	-
Absolute accuracy		-	±5.0	±20	LSB	High-precision channel
				±32.0	LSB	Other than above
DNL differential nonlinearity error		-	±4.0	-	LSB	-
INL integral nonlinearity error		-	±4.0	±12.0	LSB	-

Note: The characteristics apply when no pin functions other than 14-bit A/D converter input are used. Absolute accuracy does not include quantization errors. Offset error, full-scale error, DNL differential nonlinearity error, and INL integral nonlinearity error do not include quantization errors.
Note 1. The conversion time is the sum of the sampling time and the comparison time. The number of sampling states is indicated for the test conditions.
Note 2. Except for I/O input capacitance (C_{in}), see section 2.2.4, I/O V_{OH}, V_{OL}, and Other Characteristics.

Table 2.47 A/D conversion characteristics (6) in low power A/D conversion mode (1 of 2)
Conditions: VCC = AVCC0 = 1.8 to 5.5 V (AVCC0 = VCC when VCC < 2.0 V), VREFH0 = 1.8 to 5.5 V
Reference voltage range applied to the VREFH0 and VREFL0.

Parameter		Min	Typ	Max	Unit	Test conditions
Frequency		1	-	8	MHz	-
Analog input capacitance*2	Cs	-	-	8 (reference data)	pF	High-precision channel
		-	-	9 (reference data)	pF	Normal-precision channel
Analog input resistance	Rs	-	-	3.8 (reference data)	kΩ	High-precision channel
		-	-	8.2 (reference data)	kΩ	Normal-precision channel
Analog input voltage range	Ain	0	-	VREFH0	V	-
12-bit mode						
Resolution		-	-	12	Bit	-
Conversion time*1 (Operation at PCLKC = 8 MHz)	Permissible signal source impedance Max. = 5 kΩ	6.75	-	-	μs	High-precision channel ADCSR.ADHSC = 1 ADSSTRn.SST[7:0] = 0Dh
		10.13	-	-	μs	Normal-precision channel ADCSR.ADHSC = 1 ADSSTRn.SST[7:0] = 28h

Table 2.46 低功耗AD转换模式下的AD转换特性(5)(2of2)
Conditions: VCC = AVCC0 = 2.4 to 5.5 V, VREFH0 = 2.4 to 5.5 V
应用于VREFH0和VREFL0的参考电压范围。

Parameter		Min	Typ	Max	Unit	测试条件
Full-scale error		-	±0.75	±4.5	LSB	High-precision channel
				±6.0	LSB	上述以外
量化误差		-	±0.5	-	LSB	-
绝对精度		-	±1.25	±5.0	LSB	High-precision channel
				±8.0	LSB	上述以外
DNL微分非线性误差		-	±1.0	-	LSB	-
INL积分非线性误差		-	±1.0	±3.0	LSB	-
14-bit mode						
Resolution		-	-	14	Bit	-
转换时间*1（在PCLKC=16MHz下运行）	允许的信号源阻抗Max.=2.2kΩ	3.75	-	-	μs	High-precision channel ADCSR.ADHSC = 1 ADSSTRn.SST[7:0] = 0Dh
		5.44	-	-	μs	Normal-precision channel ADCSR.ADHSC = 1 ADSSTRn.SST[7:0] = 28h
偏移误差		-	±2.0	±18	LSB	High-precision channel
				±24.0	LSB	上述以外
Full-scale error		-	±3.0	±18	LSB	High-precision channel
				±24.0	LSB	上述以外
量化误差		-	±0.5	-	LSB	-
绝对精度		-	±5.0	±20	LSB	High-precision channel
				±32.0	LSB	上述以外
DNL微分非线性误差		-	±4.0	-	LSB	-
INL积分非线性误差		-	±4.0	±12.0	LSB	-

Note: 该特性适用于不使用除14位AD转换器输入以外的引脚功能时。绝对精度不包括量化误差。偏移误差、满量程误差、DNL微分非线性误差和INL积分非线性误差不包括量化误差。

Note 1. 转换时间是采样时间和比较时间的总和。针对测试条件指示采样状态的数量。

Note 2. 除IO输入电容(Cin)外，请参阅第2.2.4节，IOVOH、VOL和其他特性。

Table 2.47 低功耗AD转换模式下的AD转换特性(6)(1of2)
条件：VCC=AVCC0=1.8至5.5V（当VCC<2.0V时AVCC0=VCC），VREFH0=1.8至5.5V
应用于VREFH0和VREFL0的参考电压范围。

Parameter		Min	Typ	Max	Unit	测试条件
Frequency		1	-	8	MHz	-
模拟输入电容*2	Cs	-	-	8 (reference data)	pF	High-precision channel
		-	-	9 (reference data)	pF	Normal-precision channel
模拟输入电阻	Rs	-	-	3.8 (reference data)	kΩ	High-precision channel
		-	-	8.2 (reference data)	kΩ	Normal-precision channel
模拟输入电压范围	Ain	0	-	VREFH0	V	-
12-bit mode						
Resolution		-	-	12	Bit	-
转换时间*1（在PCLKC=8MHz下运行）	允许的信号源阻抗Max.=5kΩ	6.75	-	-	μs	High-precision channel ADCSR.ADHSC = 1 ADSSTRn.SST[7:0] = 0Dh
		10.13	-	-	μs	Normal-precision channel ADCSR.ADHSC = 1 ADSSTRn.SST[7:0] = 28h

RA生态工作室

Table 2.47 A/D conversion characteristics (6) in low power A/D conversion mode (2 of 2)

Conditions: VCC = AVCC0 = 1.8 to 5.5 V (AVCC0 = VCC when VCC < 2.0 V), VREFH0 = 1.8 to 5.5 V
Reference voltage range applied to the VREFH0 and VREFL0.

Parameter		Min	Typ	Max	Unit	Test conditions
Offset error		-	±1.0	±7.5	LSB	High-precision channel
				±10.0	LSB	Other than above
Full-scale error		-	±1.5	±7.5	LSB	High-precision channel
				±10.0	LSB	Other than above
Quantization error		-	±0.5	-	LSB	-
Absolute accuracy		-	±3.0	±8.0	LSB	High-precision channel
				±12.0	LSB	Other than above
DNL differential nonlinearity error		-	±1.0	-	LSB	-
INL integral nonlinearity error		-	±1.0	±3.0	LSB	-
14-bit mode						
Resolution		-	-	14	Bit	-
Conversion time*1 (Operation at PCLKC = 8 MHz)	Permissible signal source impedance Max. = 5 kΩ	7.50	-	-	μs	High-precision channel ADCSR.ADHSC = 1 ADSSTRn.SST[7:0] = 0Dh
		10.88	-	-	μs	Normal-precision channel ADCSR.ADHSC = 1 ADSSTRn.SST[7:0] = 28h
Offset error		-	±4.0	±30.0	LSB	High-precision channel
				±40.0	LSB	Other than above
Full-scale error		-	±6.0	±30.0	LSB	High-precision channel
				±40.0	LSB	Other than above
Quantization error		-	±0.5	-	LSB	-
Absolute accuracy		-	±12.0	±32.0	LSB	High-precision channel
				±48.0	LSB	Other than above
DNL differential nonlinearity error		-	±4.0	-	LSB	-
INL integral nonlinearity error		-	±4.0	±12.0	LSB	-

Note: The characteristics apply when no pin functions other than 14-bit A/D converter input are used. Absolute accuracy does not include quantization errors. Offset error, full-scale error, DNL differential nonlinearity error, and INL integral nonlinearity error do not include quantization errors.

Note 1. The conversion time is the sum of the sampling time and the comparison time. The number of sampling states is indicated for the test conditions.

Note 2. Except for I/O input capacitance (C_{in}), see section 2.2.4, I/O V_{OH}, V_{OL}, and Other Characteristics.

Table 2.48 A/D conversion characteristics (7) in low power A/D conversion mode (1 of 2)

Conditions: VCC = AVCC0 = 1.6 to 5.5 V (AVCC0 = VCC when VCC < 2.0 V), VREFH0 = 1.6 to 5.5 V
Reference voltage range applied to the VREFH0 and VREFL0.

Parameter		Min	Typ	Max	Unit	Test conditions
Frequency		1	-	4	MHz	-
Analog input capacitance*2	Cs	-	-	8 (reference data)	pF	High-precision channel
		-	-	9 (reference data)	pF	Normal-precision channel
Analog input resistance	Rs	-	-	13.1 (reference data)	kΩ	High-precision channel
		-	-	14.3 (reference data)	kΩ	Normal-precision channel
Analog input voltage range	Ain	0	-	VREFH0	V	-
12-bit mode						
Resolution		-	-	12	Bit	-

Table 2.47 低功耗AD转换模式下的AD转换特性(6)(2of2)

条件：VCC=AVCC0=1.8至5.5V（当VCC<2.0V时AVCC0=VCC），VREFH0=1.8至5.5V
应用于VREFH0和VREFL0的参考电压范围。

Parameter		Min	Typ	Max	Unit	测试条件
偏移误差		-	±1.0	±7.5	LSB	High-precision channel
				±10.0	LSB	上述以外
Full-scale error		-	±1.5	±7.5	LSB	High-precision channel
				±10.0	LSB	上述以外
量化误差		-	±0.5	-	LSB	-
绝对精度		-	±3.0	±8.0	LSB	High-precision channel
				±12.0	LSB	上述以外
DNL微分非线性误差		-	±1.0	-	LSB	-
INL积分非线性误差		-	±1.0	±3.0	LSB	-
14-bit mode						
Resolution		-	-	14	Bit	-
转换时间*1（在PCLKC=8MHz下运行）	允许的信号源阻抗Max.=5kΩ	7.50	-	-	μs	High-precision channel ADCSR.ADHSC = 1 ADSSTRn.SST[7:0] = 0Dh
		10.88	-	-	μs	Normal-precision channel ADCSR.ADHSC = 1 ADSSTRn.SST[7:0] = 28h
偏移误差		-	±4.0	±30.0	LSB	High-precision channel
				±40.0	LSB	上述以外
Full-scale error		-	±6.0	±30.0	LSB	High-precision channel
				±40.0	LSB	上述以外
量化误差		-	±0.5	-	LSB	-
绝对精度		-	±12.0	±32.0	LSB	High-precision channel
				±48.0	LSB	上述以外
DNL微分非线性误差		-	±4.0	-	LSB	-
INL积分非线性误差		-	±4.0	±12.0	LSB	-

Note: 该特性适用于不使用除14位AD转换器输入以外的引脚功能时。绝对精度不包括量化误差。偏移误差、满量程误差、DNL微分非线性误差和INL积分非线性误差不包括量化误差。

Note 1. 转换时间是采样时间和比较时间的总和。针对测试条件指示采样状态的数量。

Note 2. 除IO输入电容(Cin)外，请参阅第2.2.4节，IOVOH、VOL和其他特性。

Table 2.48 低功耗AD转换模式下的AD转换特性(7)(1of2)

条件：VCC=AVCC0=1.6至5.5V（当VCC<2.0V时AVCC0=VCC），VREFH0=1.6至5.5V
应用于VREFH0和VREFL0的参考电压范围。

Parameter		Min	Typ	Max	Unit	测试条件
Frequency		1	-	4	MHz	-
模拟输入电容*2	Cs	-	-	8 (reference data)	pF	High-precision channel
		-	-	9 (reference data)	pF	Normal-precision channel
模拟输入电阻	Rs	-	-	13.1 (reference data)	kΩ	High-precision channel
		-	-	14.3 (reference data)	kΩ	Normal-precision channel
模拟输入电压范围	Ain	0	-	VREFH0	V	-
12-bit mode						
Resolution		-	-	12	Bit	-

RA生态工作室

Table 2.48 A/D conversion characteristics (7) in low power A/D conversion mode (2 of 2)

Conditions: VCC = AVCC0 = 1.6 to 5.5 V (AVCC0 = VCC when VCC < 2.0 V), VREFH0 = 1.6 to 5.5 V
Reference voltage range applied to the VREFH0 and VREFL0.

Parameter		Min	Typ	Max	Unit	Test conditions
Conversion time*1 (Operation at PCLKC = 4 MHz)	Permissible signal source impedance Max. = 9.9 kΩ	13.5	-	-	μs	High-precision channel ADCSR.ADHSC = 1 ADSSTRn.SST[7:0] = 0Dh
		20.25	-	-	μs	Normal-precision channel ADCSR.ADHSC = 1 ADSSTRn.SST[7:0] = 28h
Offset error		-	±1.0	±7.5	LSB	High-precision channel
				±10.0	LSB	Other than above
Full-scale error		-	±1.5	±7.5	LSB	High-precision channel
				±10.0	LSB	Other than above
Quantization error		-	±0.5	-	LSB	-
Absolute accuracy		-	±3.0	±8.0	LSB	High-precision channel
				±12.0	LSB	Other than above
DNL differential nonlinearity error		-	±1.0	-	LSB	-
INL integral nonlinearity error		-	±1.0	±3.0	LSB	-
14-bit mode						
Resolution		-	-	14	Bit	-
Conversion time*1 (Operation at PCLKC = 4 MHz)	Permissible signal source impedance Max. = 9.9 kΩ	15.0	-	-	μs	High-precision channel ADCSR.ADHSC = 1 ADSSTRn.SST[7:0] = 0Dh
		21.75	-	-	μs	Normal-precision channel ADCSR.ADHSC = 1 ADSSTRn.SST[7:0] = 28h
Offset error		-	±4.0	±30.0	LSB	High-precision channel
				±40.0	LSB	Other than above
Full-scale error		-	±6.0	±30.0	LSB	High-precision channel
				±40.0	LSB	Other than above
Quantization error		-	±0.5	-	LSB	-
Absolute accuracy		-	±12.0	±32.0	LSB	High-precision channel
				±48.0	LSB	Other than above
DNL differential nonlinearity error		-	±4.0	-	LSB	-
INL integral nonlinearity error		-	±4.0	±12.0	LSB	-

Note: The characteristics apply when no pin functions other than 14-bit A/D converter input are used. Absolute accuracy does not include quantization errors. Offset error, full-scale error, DNL differential nonlinearity error, and INL integral nonlinearity error do not include quantization errors.

Note 1. The conversion time is the sum of the sampling time and the comparison time. The number of sampling states is indicated for the test conditions.

Note 2. Except for I/O input capacitance (C_{in}), see section 2.2.4, I/O V_{OH}, V_{OL}, and Other Characteristics.

Table 2.48 低功耗AD转换模式下的AD转换特性(7)(2of2)

条件：VCC=AVCC0=1.6至5.5V（当VCC<2.0V时AVCC0=VCC），VREFH0=1.6至5.5V
应用于VREFH0和VREFL0的参考电压范围。

Parameter		Min	Typ	Max	Unit	测试条件
转换时间*1（在PCLKC=4MHz下运行）	允许的信号源阻抗Max.=9.9kΩ	13.5	-	-	μs	High-precision channel ADCSR.ADHSC = 1 ADSSTRn.SST[7:0] = 0Dh
		20.25	-	-	μs	Normal-precision channel ADCSR.ADHSC = 1 ADSSTRn.SST[7:0] = 28h
偏移误差		-	±1.0	±7.5	LSB	High-precision channel
				±10.0	LSB	上述以外
Full-scale error		-	±1.5	±7.5	LSB	High-precision channel
				±10.0	LSB	上述以外
量化误差		-	±0.5	-	LSB	-
绝对精度		-	±3.0	±8.0	LSB	High-precision channel
				±12.0	LSB	上述以外
DNL微分非线性误差		-	±1.0	-	LSB	-
INL积分非线性误差		-	±1.0	±3.0	LSB	-
14-bit mode						
Resolution		-	-	14	Bit	-
转换时间*1（在PCLKC=4MHz下运行）	允许的信号源阻抗Max.=9.9kΩ	15.0	-	-	μs	High-precision channel ADCSR.ADHSC = 1 ADSSTRn.SST[7:0] = 0Dh
		21.75	-	-	μs	Normal-precision channel ADCSR.ADHSC = 1 ADSSTRn.SST[7:0] = 28h
偏移误差		-	±4.0	±30.0	LSB	High-precision channel
				±40.0	LSB	上述以外
Full-scale error		-	±6.0	±30.0	LSB	High-precision channel
				±40.0	LSB	上述以外
量化误差		-	±0.5	-	LSB	-
绝对精度		-	±12.0	±32.0	LSB	High-precision channel
				±48.0	LSB	上述以外
DNL微分非线性误差		-	±4.0	-	LSB	-
INL积分非线性误差		-	±4.0	±12.0	LSB	-

Note: 该特性适用于不使用除14位AD转换器输入以外的引脚功能时。绝对精度不包括量化误差。偏移误差、满量程误差、DNL微分非线性误差和INL积分非线性误差不包括量化误差。

Note 1. 转换时间是采样时间和比较时间的总和。针对测试条件指示采样状态的数量。

Note 2. 除IO输入电容(Cin)外，请参阅第2.2.4节，IOVOH、VOL和其他特性。

RA生态工作室

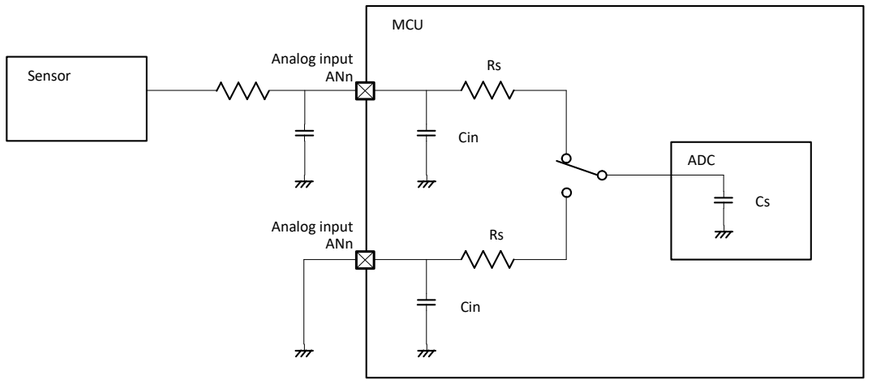

Figure 2.69 Equivalent circuit for analog input

Table 2.49 14-Bit A/D converter channel classification

Classification	Channel	Conditions	Remarks
High-precision channel	AN000 to AN014	AVCC0 = 1.6 to 5.5 V	Pins AN000 to AN014 cannot be used as general I/O, IRQ2, IRQ3 inputs, and TS transmission, when the A/D converter is in use
Normal-precision channel	AN016 to AN025		
Internal reference voltage input channel	Internal reference voltage	AVCC0 = 2.0 to 5.5 V	-
Temperature sensor input channel	Temperature sensor output	AVCC0 = 2.0 to 5.5 V	-

Table 2.50 A/D internal reference voltage characteristics

Conditions: VCC = AVCC0 = VREFH0 = 2.0 to 5.5 V*1

Parameter	Min	Typ	Max	Unit	Test conditions
Internal reference voltage input channel*2	1.36	1.43	1.50	V	-
Frequency*3	1	-	2	MHz	-
Sampling time*4	5.0	-	-	μs	-

Note 1. The internal reference voltage cannot be selected for input channels when AVCC0 < 2.0 V.
Note 2. The 14-bit A/D internal reference voltage indicates the voltage when the internal reference voltage is input to the 14-bit A/D converter.
Note 3. This is a parameter for ADC14 when the internal reference voltage is used as the high-potential reference voltage.
Note 4. This is a parameter for ADC14 when the internal reference voltage is selected for an analog input channel in ADC14.

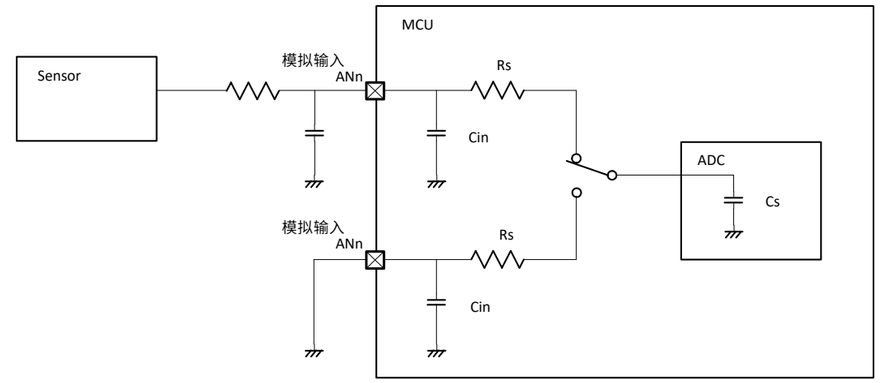

Figure 2.69 模拟输入等效电路

Table 2.49 14位模数转换器通道分类

Classification	Channel	Conditions	Remarks
High-precision channel	AN000 to AN014	AVCC0 = 1.6 to 5.5 V	使用AD转换器时，AN000至AN014引脚不能用作通用IO、IRQ2、IRQ3输入和TS传输
Normal-precision channel	AN016 to AN025		
内部参考电压输入通道	内部参考电压	AVCC0 = 2.0 to 5.5 V	-
温度传感器输入通道	温度传感器输出	AVCC0 = 2.0 to 5.5 V	-

Table 2.50 AD内部参考电压特性

Conditions: VCC = AVCC0 = VREFH0 = 2.0 to 5.5 V*1

Parameter	Min	Typ	Max	Unit	测试条件
内部参考电压输入通道*2	1.36	1.43	1.50	V	-
Frequency*3	1	-	2	MHz	-
Sampling time*4	5.0	-	-	μs	-

Note 1. 当AVCC0<2.0V时，不能为输入通道选择内部参考电压。
Note 2. 14位AD内部参考电压是指内部参考电压输入到14位AD转换器时的电压。
Note 3. 这是内部参考电压用作高电位参考电压时ADC14的参数。
Note 4. 当为ADC14中的模拟输入通道选择内部参考电压时，这是ADC14的参数。

RA生态工作室

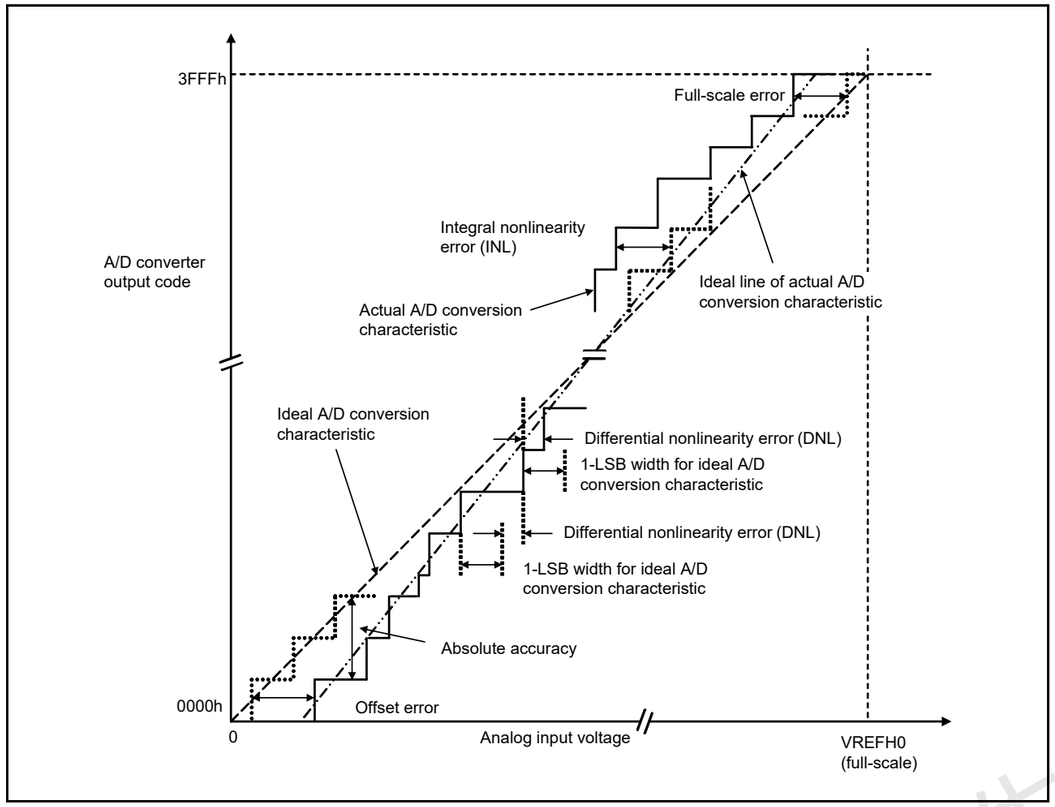

Figure 2.70 Illustration of 14-bit A/D converter characteristic terms

Absolute accuracy

Absolute accuracy is the difference between output code based on the theoretical A/D conversion characteristics, and the actual A/D conversion result. When measuring absolute accuracy, the voltage at the midpoint of the width of analog input voltage (1-LSB width), which can meet the expectation of outputting an equal code based on the theoretical A/D conversion characteristics, is used as the analog input voltage. For example, if 12-bit resolution is used and the reference voltage VREFH0 = 3.072 V, then 1-LSB width becomes 0.75 mV, and 0 mV, 0.75 mV, and 1.5 mV are used as the analog input voltages. If analog input voltage is 6 mV, an absolute accuracy of ±5 LSB means that the actual A/D conversion result is in the range of 003h to 00Dh, though an output code of 008h can be expected from the theoretical A/D conversion characteristics.

Integral nonlinearity error (INL)

Integral nonlinearity error is the maximum deviation between the ideal line when the measured offset and full-scale errors are zeroed, and the actual output code.

Differential nonlinearity error (DNL)

Differential nonlinearity error is the difference between 1-LSB width based on the ideal A/D conversion characteristics and the width of the actually output code.

Offset error

Offset error is the difference between the transition point of the ideal first output code and the actual first output code.

Full-scale error

Full-scale error is the difference between the transition point of the ideal last output code and the actual last output code.

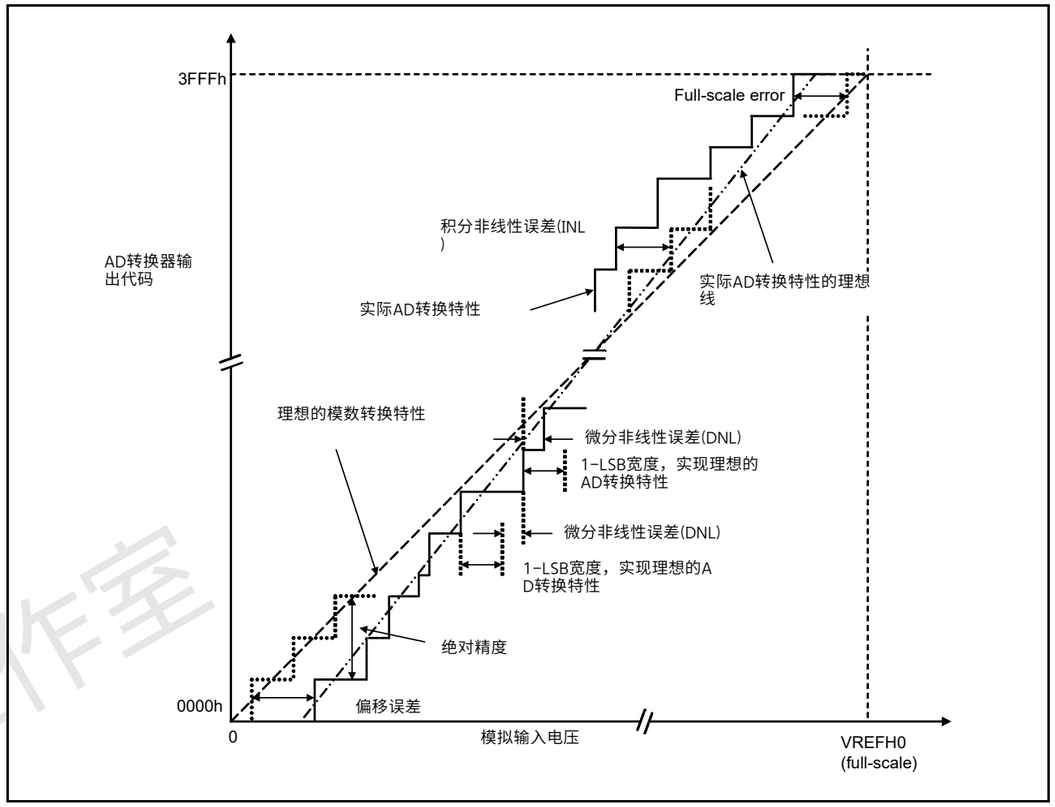

Figure 2.70 14位AD转换器特性项说明

绝对精度

绝对精度是基于理论AD转换特性的输出代码与实际AD转换结果之间的差异。在测量绝对精度时，将模拟输入电压宽度（1-LSB宽度）的中点电压作为模拟输入电压，该电压可以满足基于理论模数转换特性输出等码的预期。例如，如果使用12位分辨率并且参考电压VREFH0=3.072V，则1-LSB宽度变为0.75mV，并且使用0mV、0.75mV和1.5mV作为模拟输入电压。如果模拟输入电压为6mV，±5LSB的绝对精度意味着实际的AD转换结果在003h到00Dh的范围内，尽管从理论上的AD转换特性可以预期输出代码为008h。

积分非线性误差(INL)

积分非线性误差是测量的偏移和满量程误差为零时的理想线与实际输出代码之间的最大偏差。

微分非线性误差(DNL)

微分非线性误差是基于理想AD转换特性的1-LSB宽度与实际输出码的宽度之差。

偏移误差

偏移误差是理想的第一个输出代码的转换点与实际的第一个输出代码之间的差异。

Full-scale error

满量程误差是理想的最后输出代码的转换点与实际的最后输出代码之间的差异。

RA生态工作室

2.6 DAC12 Characteristics

Table 2.51 D/A conversion characteristics (1)
Conditions: VCC = AVCC0 = 1.8 to 5.5 V
Reference voltage = VREFH or VREFL selected

Parameter	Min	Typ	Max	Unit	Test conditions
Resolution	-	-	12	bit	-
Resistive load	30	-	-	kΩ	-
Load capacitance	-	-	50	pF	-
Output voltage range	0.35	-	AVCC0 - 0.47	V	-
DNL differential nonlinearity error	-	±0.5	±1.0	LSB	-
INL integral nonlinearity error	-	±2.0	±8.0	LSB	-
Offset error	-	-	±20	mV	-
Full-scale error	-	-	±20	mV	-
Output impedance	-	5	-	Ω	-
Conversion time	-	-	30	μs	-

Table 2.52 D/A conversion characteristics (2)
Conditions: VCC = AVCC0 = 1.8 to 5.5 V
Reference voltage = AVCC0 or AVSS0 selected

Parameter	Min	Typ	Max	Unit	Test conditions
Resolution	-	-	12	bit	-
Resistive load	30	-	-	kΩ	-
Load capacitance	-	-	50	pF	-
Output voltage range	0.35	-	AVCC0 - 0.47	V	-
DNL differential nonlinearity error	-	±0.5	±2.0	LSB	-
INL integral nonlinearity error	-	±2.0	±8.0	LSB	-
Offset error	-	-	±30	mV	-
Full-scale error	-	-	±30	mV	-
Output impedance	-	5	-	Ω	-
Conversion time	-	-	30	μs	-

Table 2.53 D/A conversion characteristics (3)
Conditions: VCC = AVCC0 = 1.8 to 5.5 V
Reference voltage = internal reference voltage selected

Parameter	Min	Typ	Max	Unit	Test conditions
Resolution	-	-	12	bit	-
Internal reference voltage (Vbgr)	1.36	1.43	1.50	V	-
Resistive load	30	-	-	kΩ	-
Load capacitance	-	-	50	pF	-
Output voltage range	0.35	-	Vbgr	V	-
DNL differential nonlinearity error	-	±2.0	±16.0	LSB	-
INL integral nonlinearity error	-	±8.0	±16.0	LSB	-
Offset error	-	-	±30	mV	-
Output impedance	-	5	-	Ω	-
Conversion time	-	-	30	μs	-

2.6 DAC12 Characteristics

Table 2.51 DA转换特性(1)
Conditions: VCC = AVCC0 = 1.8 to 5.5 V
参考电压=VREFH或VREFL选择

Parameter	Min	Typ	Max	Unit	测试条件
Resolution	-	-	12	bit	-
阻性负载	30	-	-	kΩ	-
负载电容	-	-	50	pF	-
输出电压范围	0.35	-	AVCC0 - 0.47	V	-
DNL微分非线性误差	-	±0.5	±1.0	LSB	-
INL积分非线性误差	-	±2.0	±8.0	LSB	-
偏移误差	-	-	±20	mV	-
Full-scale error	-	-	±20	mV	-
输出阻抗	-	5	-	Ω	-
转换时间	-	-	30	μs	-

Table 2.52 DA转换特性(2)
Conditions: VCC = AVCC0 = 1.8 to 5.5 V
参考电压=选择AVCC0或AVSS0

Parameter	Min	Typ	Max	Unit	测试条件
Resolution	-	-	12	bit	-
阻性负载	30	-	-	kΩ	-
负载电容	-	-	50	pF	-
输出电压范围	0.35	-	AVCC0 - 0.47	V	-
DNL微分非线性误差	-	±0.5	±2.0	LSB	-
INL积分非线性误差	-	±2.0	±8.0	LSB	-
偏移误差	-	-	±30	mV	-
Full-scale error	-	-	±30	mV	-
输出阻抗	-	5	-	Ω	-
转换时间	-	-	30	μs	-

Table 2.53 DA转换特性(3)
Conditions: VCC = AVCC0 = 1.8 to 5.5 V
参考电压=选择的内部参考电压

Parameter	Min	Typ	Max	Unit	测试条件
Resolution	-	-	12	bit	-
内部参考电压(Vbgr)	1.36	1.43	1.50	V	-
阻性负载	30	-	-	kΩ	-
负载电容	-	-	50	pF	-
输出电压范围	0.35	-	Vbgr	V	-
DNL微分非线性误差	-	±2.0	±16.0	LSB	-
INL积分非线性误差	-	±8.0	±16.0	LSB	-
偏移误差	-	-	±30	mV	-
输出阻抗	-	5	-	Ω	-
转换时间	-	-	30	μs	-

RA生态工作室

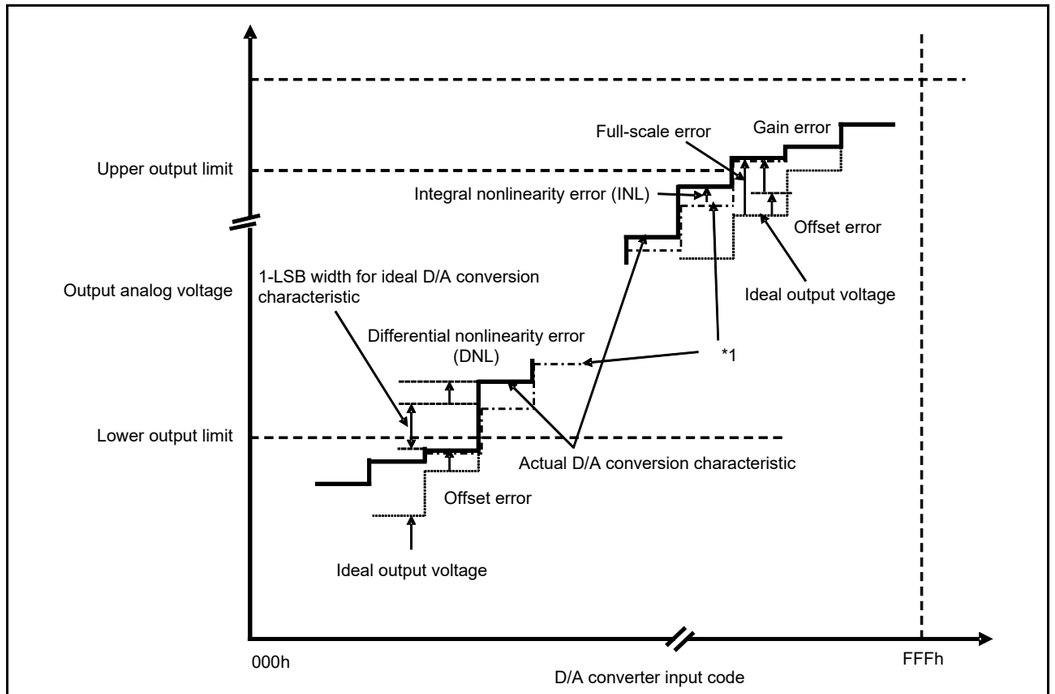

Note 1. Ideal D/A conversion output voltage that is adjusted so that offset and full scale errors are zeroed.

Figure 2.71 Illustration of D/A converter characteristic terms

Integral nonlinearity error (INL)

Integral nonlinearity error is the maximum deviation between the ideal output voltage based on the ideal conversion characteristic when the measured offset and full-scale errors are zeroed, and the actual output voltage.

Differential nonlinearity error (DNL)

Differential nonlinearity error is the difference between 1-LSB voltage width based on the ideal D/A conversion characteristics and the width of the actual output voltage.

Offset error

Offset error is the difference between the highest actual output voltage that falls below the lower output limit and the ideal output voltage based on the input code.

Full-scale error

Full-scale error is the difference between the lowest actual output voltage that exceeds the upper output limit and the ideal output voltage based on the input code.

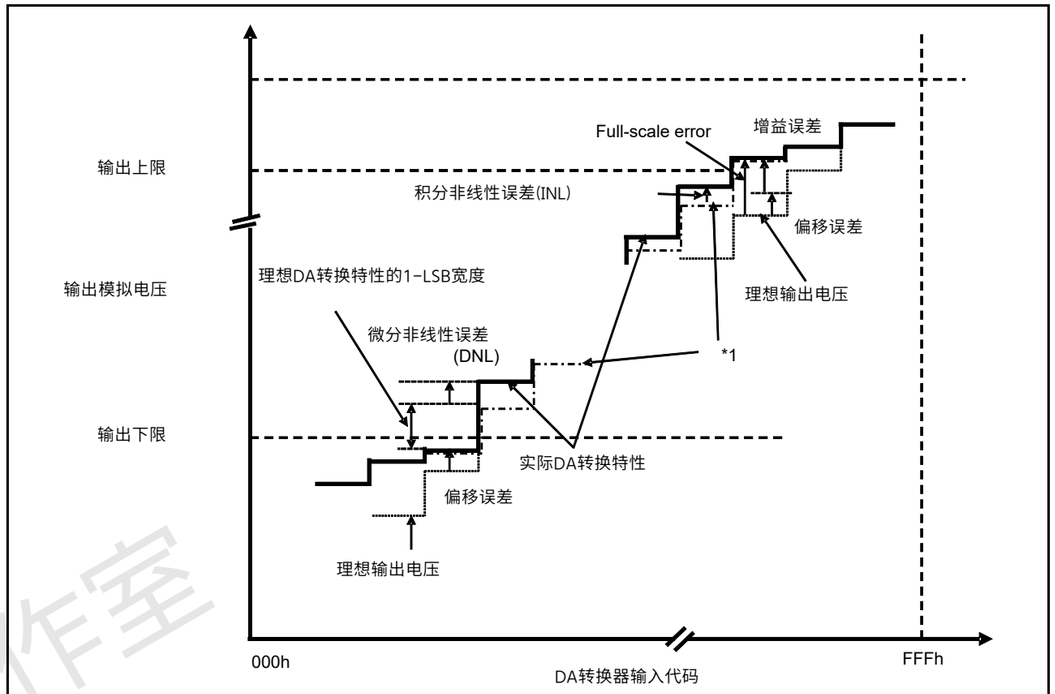

Note 1. 理想DA转换输出电压经过调整，使偏移和满量程误差为零。

Figure 2.71 数模转换器特性项说明

积分非线性误差(INL)

积分非线性误差是在测量的失调和满量程误差为零时基于理想转换特性的理想输出电压与实际输出电压之间的最大偏差。

微分非线性误差(DNL)

微分非线性误差是基于理想DA转换特性的1-LSB电压宽度与实际输出电压的宽度之差。

偏移误差

失调误差是低于输出下限的最高实际输出电压与基于输入代码的理想输出电压之间的差值。

Full-scale error

满量程误差是超出输出上限的最低实际输出电压与基于输入代码的理想输出电压之间的差值。

RA生态工作室

2.7 TSN Characteristics

Table 2.54 TSN characteristics
Conditions: VCC = AVCC0 = 2.0 to 5.5 V

Parameter	Symbol	Min	Typ	Max	Unit	Test conditions
Relative accuracy	-	-	±1.5	-	°C	2.4 V or above
	-	-	±2.0	-	°C	Below 2.4 V
Temperature slope	-	-	-3.65	-	mV/°C	-
Output voltage (at 25°C)	-	-	1.05	-	V	VCC = 3.3 V
Temperature sensor start time	t_{START}	-	-	5	μs	-
Sampling time	-	5	-	-	μs	-

2.8 OSC Stop Detect Characteristics

Table 2.55 Oscillation stop detection circuit characteristics

Parameter	Symbol	Min	Typ	Max	Unit	Test conditions
Detection time	t_{dr}	-	-	1	ms	Figure 2.72

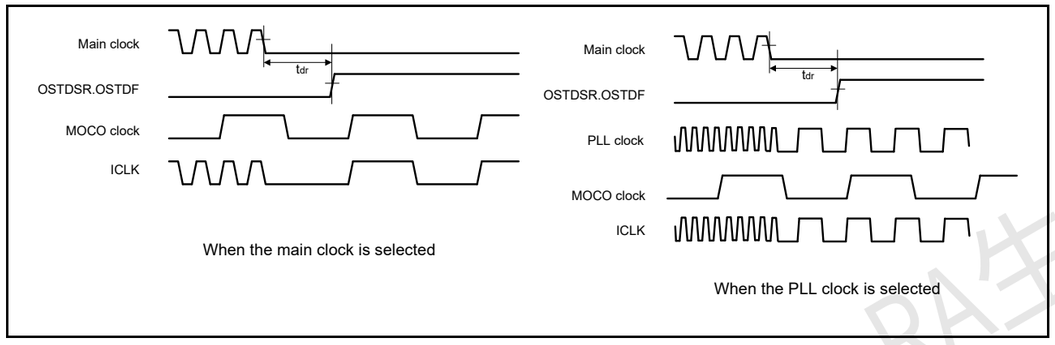

Figure 2.72 Oscillation stop detection timing

2.7 TSN Characteristics

Table 2.54 TSN characteristics
Conditions: VCC = AVCC0 = 2.0 to 5.5 V

Parameter	Symbol	Min	Typ	Max	Unit	测试条件
相对精度	-	-	±1.5	-	°C	2.4V或以上
	-	-	±2.0	-	°C	Below 2.4 V
温度斜率	-	-	-3.65	-	mV/°C	-
输出电压（25°C时）	-	-	1.05	-	V	VCC = 3.3 V
温度传感器启动时间	t_{START}	-	-	5	μs	-
采样时间	-	5	-	-	μs	-

2.8 OSC停止检测特性

Table 2.55 振荡停止检测电路特性

Parameter	Symbol	Min	Typ	Max	Unit	测试条件
检测时间	t_{dr}	-	-	1	ms	Figure 2.72

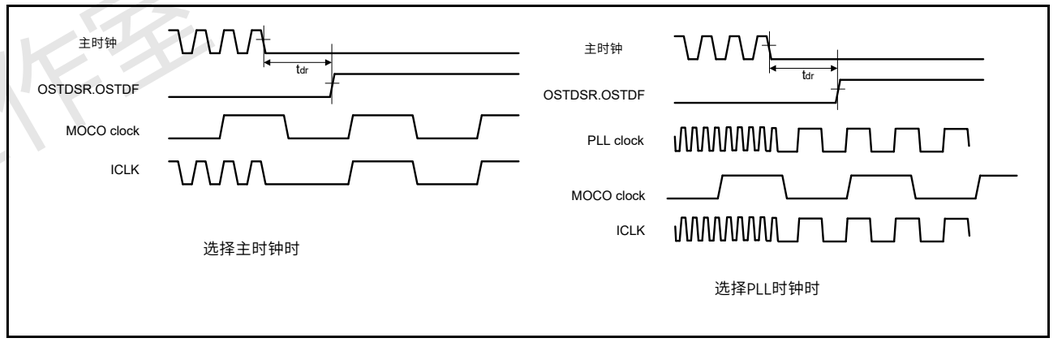

Figure 2.72 振荡停止检测时机

RA生态工作室

2.9 POR and LVD Characteristics

Table 2.56 Power-on reset circuit and voltage detection circuit characteristics (1)

Parameter		Symbol	Min	Typ	Max	Unit	Test conditions
Voltage detection level*1	Power-on reset (POR)	V_{POR}	1.27	1.42	1.57	V	Figure 2.73, Figure 2.74
	Voltage detection circuit (LVD0)*2	V_{det0_0}	3.68	3.85	4.00	V	Figure 2.75 At falling edge VCC
		V_{det0_1}	2.68	2.85	2.96		
		V_{det0_2}	2.38	2.53	2.64		
		V_{det0_3}	1.78	1.90	2.02		
		V_{det0_4}	1.60	1.69	1.82		
	Voltage detection circuit (LVD1)*3	V_{det1_0}	4.13	4.29	4.45	V	Figure 2.76 At falling edge VCC
		V_{det1_1}	3.98	4.16	4.30		
		V_{det1_2}	3.86	4.03	4.18		
		V_{det1_3}	3.68	3.86	4.00		
		V_{det1_4}	2.98	3.10	3.22		
		V_{det1_5}	2.89	3.00	3.11		
		V_{det1_6}	2.79	2.90	3.01		
		V_{det1_7}	2.68	2.79	2.90		
		V_{det1_8}	2.58	2.68	2.78		
		V_{det1_9}	2.48	2.58	2.68		
		V_{det1_A}	2.38	2.48	2.58		
		V_{det1_B}	2.10	2.20	2.30		
		V_{det1_C}	1.84	1.96	2.05		
		V_{det1_D}	1.74	1.86	1.95		
		V_{det1_E}	1.63	1.75	1.84		
		V_{det1_F}	1.60	1.65	1.73		
	Voltage detection circuit (LVD2)*4	V_{det2_0}	4.11	4.31	4.48	V	Figure 2.77 At falling edge VCC
		V_{det2_1}	3.97	4.17	4.34		
		V_{det2_2}	3.83	4.03	4.20		
		V_{det2_3}	3.64	3.84	4.01		

Note 1. These characteristics apply when noise is not superimposed on the power supply. When a setting causes this voltage detection level to overlap with that of the voltage detection circuit, it cannot be specified whether LVD1 or LVD2 is used for voltage detection.

Note 2. # in the symbol $V_{det0_\#}$ denotes the value of the OFS1.VDSEL1[2:0] bits.

Note 3. # in the symbol $V_{det1_\#}$ denotes the value of the LVDLVLR.LVD1LVL[4:0] bits.

Note 4. # in the symbol $V_{det2_\#}$ denotes the value of the LVDLVLR.LVD2LVL[2:0] bits.

2.9 POR和LVD特性

Table 2.56 上电复位电路及电压检测电路特性（一）

Parameter		Symbol	Min	Typ	Max	Unit	测试条件
电压检测电平*1	Power-on reset (POR)	V_{POR}	1.27	1.42	1.57	V	Figure 2.73, Figure 2.74
	电压检测电路（LVD0）*2	V_{det0_0}	3.68	3.85	4.00	V	Figure 2.75 在下降沿 VCC
		V_{det0_1}	2.68	2.85	2.96		
		V_{det0_2}	2.38	2.53	2.64		
		V_{det0_3}	1.78	1.90	2.02		
		V_{det0_4}	1.60	1.69	1.82		
	电压检测电路（LVD1）*3	V_{det1_0}	4.13	4.29	4.45	V	Figure 2.76 在下降沿 VCC
		V_{det1_1}	3.98	4.16	4.30		
		V_{det1_2}	3.86	4.03	4.18		
		V_{det1_3}	3.68	3.86	4.00		
		V_{det1_4}	2.98	3.10	3.22		
		V_{det1_5}	2.89	3.00	3.11		
		V_{det1_6}	2.79	2.90	3.01		
		V_{det1_7}	2.68	2.79	2.90		
		V_{det1_8}	2.58	2.68	2.78		
		V_{det1_9}	2.48	2.58	2.68		
		V_{det1_A}	2.38	2.48	2.58		
		V_{det1_B}	2.10	2.20	2.30		
		V_{det1_C}	1.84	1.96	2.05		
		V_{det1_D}	1.74	1.86	1.95		
		V_{det1_E}	1.63	1.75	1.84		
		V_{det1_F}	1.60	1.65	1.73		
	电压检测电路（LVD2）*4	V_{det2_0}	4.11	4.31	4.48	V	Figure 2.77 在下降沿 VCC
		V_{det2_1}	3.97	4.17	4.34		
		V_{det2_2}	3.83	4.03	4.20		
		V_{det2_3}	3.64	3.84	4.01		

Note 1. 这些特性适用于电源上没有叠加噪声的情况。当设置导致该电压检测电平与电压检测电路的电平重叠时，无法指定是LVD1还是LVD2用于电压检测。

Note 2. 符号Vdet0_#中的#表示OFS1.VDSEL1[2:0]位的值。

Note 3. 符号Vdet1_#中的#表示LVDLVLR.LVD1LVL[4:0]位的值。

Note 4. 符号Vdet2_#中的#表示LVDLVLR.LVD2LVL[2:0]位的值。

瑞生态工作室

Table 2.57 Power-on reset circuit and voltage detection circuit characteristics (2)

Parameter		Symbol	Min	Typ	Max	Unit	Test conditions
Wait time after power-on reset cancellation	LVD0:enable	t_{POR}	-	1.7	-	ms	-
	LVD0:disable	t_{POR}	-	1.3	-	ms	-
Wait time after voltage monitor 0,1,2 reset cancellation	LVD0:enable*1	$t_{LVD0,1,2}$	-	0.6	-	ms	-
	LVD0:disable*2	$t_{LVD1,2}$	-	0.2	-	ms	-
Response delay*3		t_{det}	-	-	350	μs	Figure 2.73, Figure 2.74
Minimum VCC down time		t_{VOFF}	450	-	-	μs	Figure 2.73, VCC = 1.0 V or above
Power-on reset enable time		$t_{W\ (POR)}$	1	-	-	ms	Figure 2.74, VCC = below 1.0 V
LVD operation stabilization time (after LVD is enabled)		$T_{d\ (E-A)}$	-	-	300	μs	Figure 2.76, Figure 2.77
Hysteresis width (POR)		V_{PORH}	-	110	-	mV	-
Hysteresis width (LVD0, LVD1 and LVD2)		V_{LVH}	-	60	-	mV	LVD0 selected
			-	100	-	mV	V_{det1_0} to V_{det1_2} selected.
			-	60	-		V_{det1_3} to V_{det1_9} selected.
			-	50	-		V_{det1_A} or V_{det1_B} selected.
			-	40	-		V_{det1_C} or V_{det1_F} selected.
			-	60	-		LVD2 selected

Note 1. When OFS1.LVDAS = 0.
Note 2. When OFS1.LVDAS = 1.
Note 3. The minimum VCC down time indicates the time when VCC is below the minimum value of voltage detection levels V_{POR}, V_{det0}, V_{det1}, and V_{det2} for the POR/LVD.

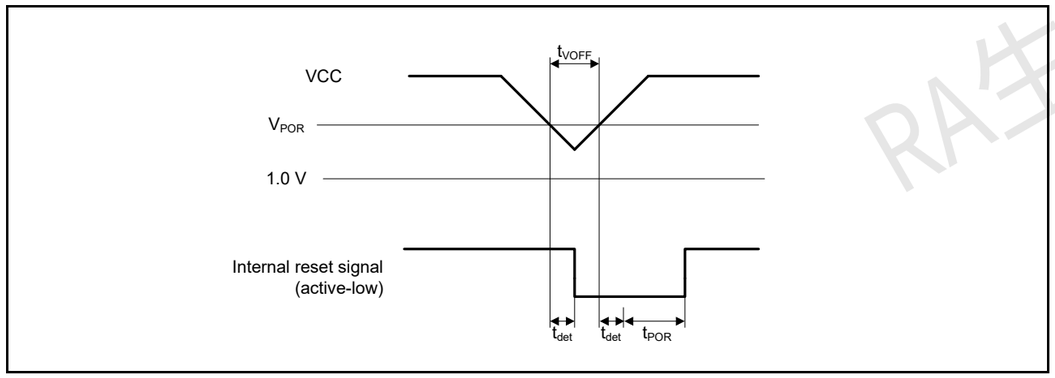

Figure 2.73 Voltage detection reset timing

Table 2.57 上电复位电路及电压检测电路特性（二）

Parameter		Symbol	Min	Typ	Max	Unit	测试条件
上电复位取消后的等待时间	LVD0:enable	t_{POR}	-	1.7	-	ms	-
	LVD0:disable	t_{POR}	-	1.3	-	ms	-
电压监视器0 1 2复位取消后的等待时间	LVD0:enable*1	$t_{LVD0,1,2}$	-	0.6	-	ms	-
	LVD0:disable*2	$t_{LVD1,2}$	-	0.2	-	ms	-
Response delay*3		t_{det}	-	-	350	μs	Figure 2.73, Figure 2.74
最小VCC停机时间		t_{VOFF}	450	-	-	μs	Figure 2.73, VCC=1.0V或以上
上电复位使能时间		$t_{W\ (POR)}$	1	-	-	ms	Figure 2.74, VCC = below 1.0 V
LVD操作稳定时间（启用LVD后）		$T_{d\ (E-A)}$	-	-	300	μs	Figure 2.76, Figure 2.77
迟滞宽度(POR)		V_{PORH}	-	110	-	mV	-
迟滞宽度（LVD0、LVD1和LVD2）		V_{LVH}	-	60	-	mV	LVD0 selected
			-	100	-	mV	已选择Vdet1_0至Vdet1_2。
			-	60	-		已选择Vdet1_3至Vdet1_9。
			-	50	-		选择Vdet1_A或Vdet1_B。
			-	40	-		选择Vdet1_C或Vdet1_F。
			-	60	-		LVD2 selected

Note 1. When OFS1.LVDAS = 0.
Note 2. When OFS1.LVDAS = 1.
Note 3. 最小VCC停机时间表示VCC低于电压检测电平VPOR的最小值的时间，PORLVD的Vdet0、Vdet1和Vdet2。

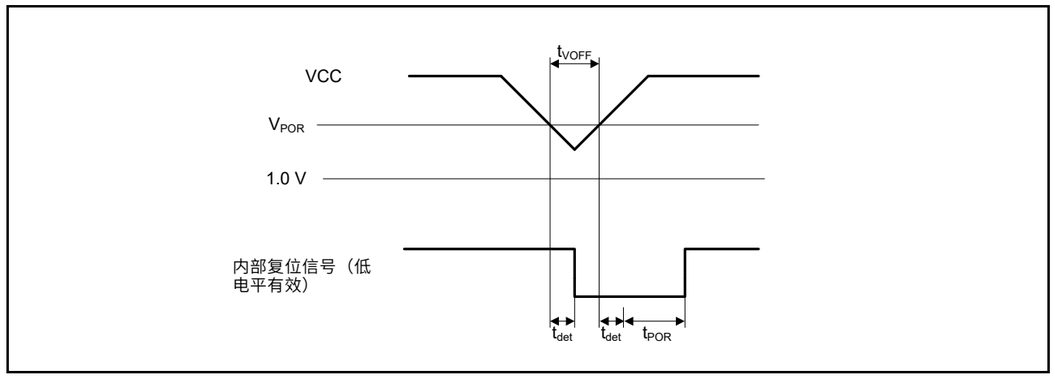

Figure 2.73 电压检测复位时序

RA生态工作室

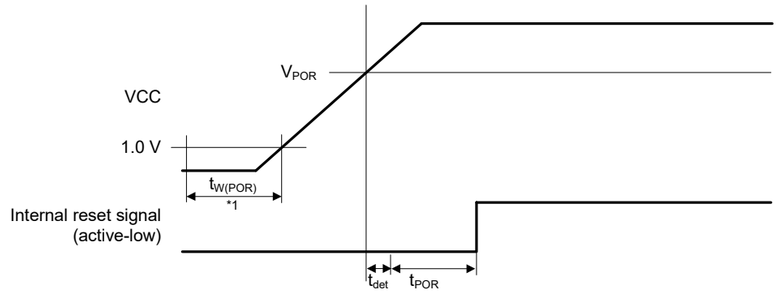

Note: $t_{W(POR)}$ is the time required for a power-on reset to be enabled while the external power VCC is being held below the valid voltage (1.0 V).
When VCC turns on, maintain $t_{W(POR)}$ for 1.0 ms or more.

Figure 2.74 Power-on reset timing

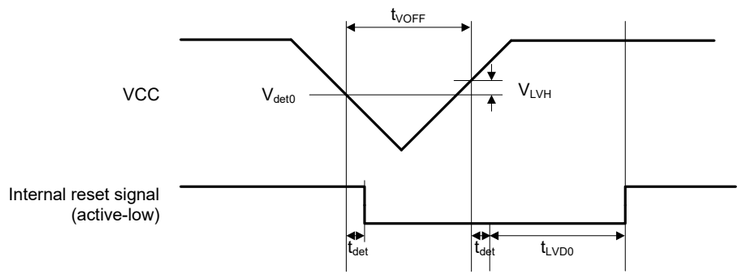

Figure 2.75 Voltage detection circuit timing (V_{det0})

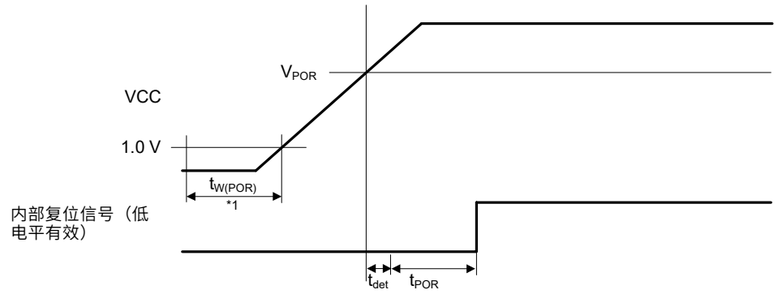

Note: tW(POR)是在外部电源VCC保持在有效电压(1.0V)以下时上电复位启用所需的时间。当VCC打开时，保持tW(POR)1.0ms或更长。

Figure 2.74 上电复位时序

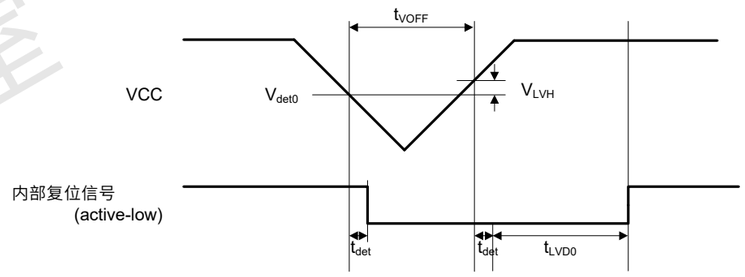

Figure 2.75 电压检测电路时序（Vdet0）

RA生态工作室

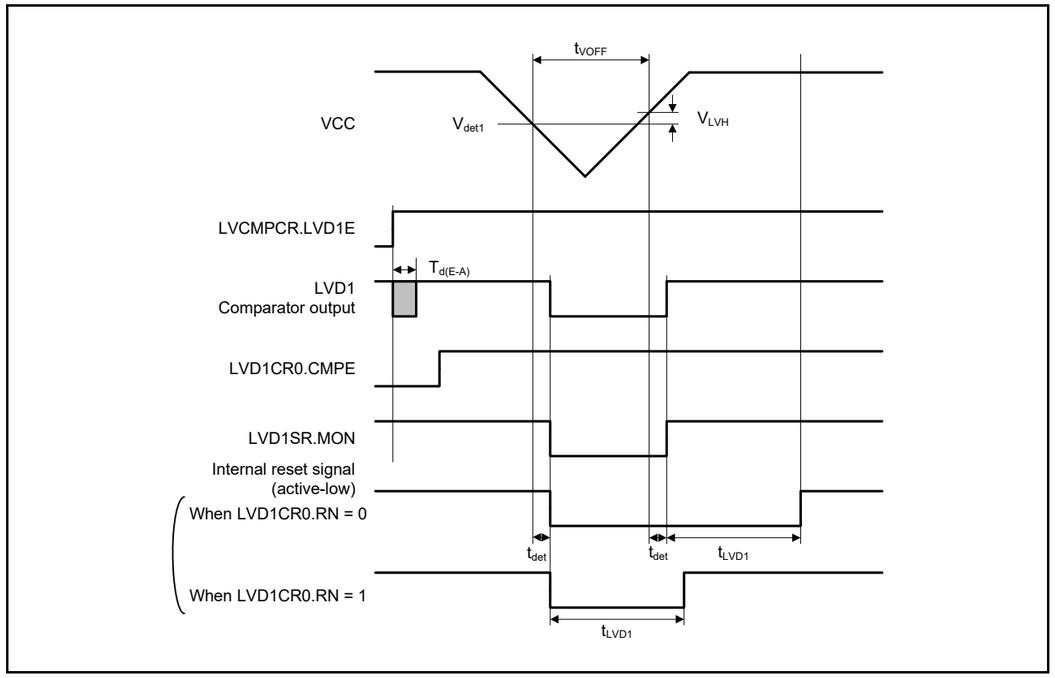

Figure 2.76 **Voltage detection circuit timing (V_{det1})**

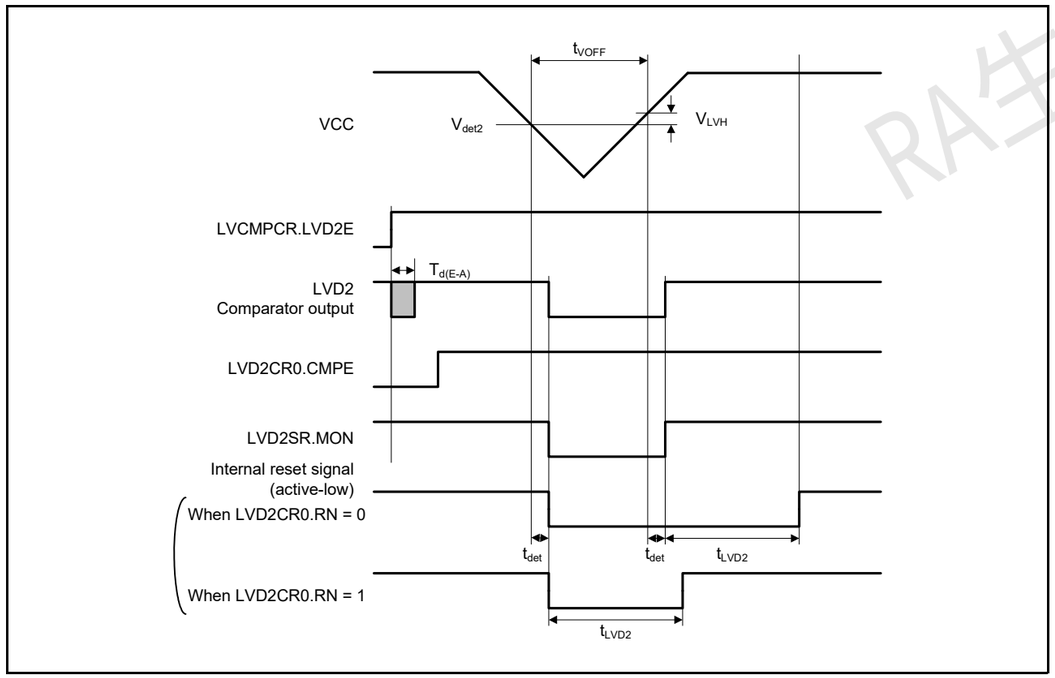

Figure 2.77 **Voltage detection circuit timing (V_{det2})**

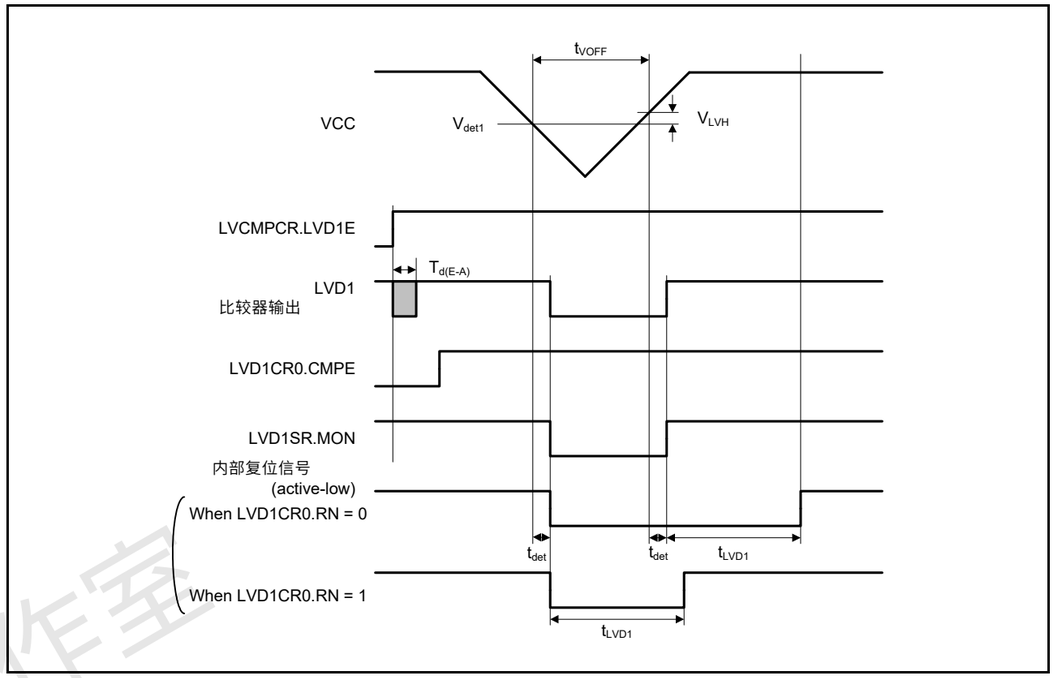

Figure 2.76 电压检测电路时序（Vdet1）

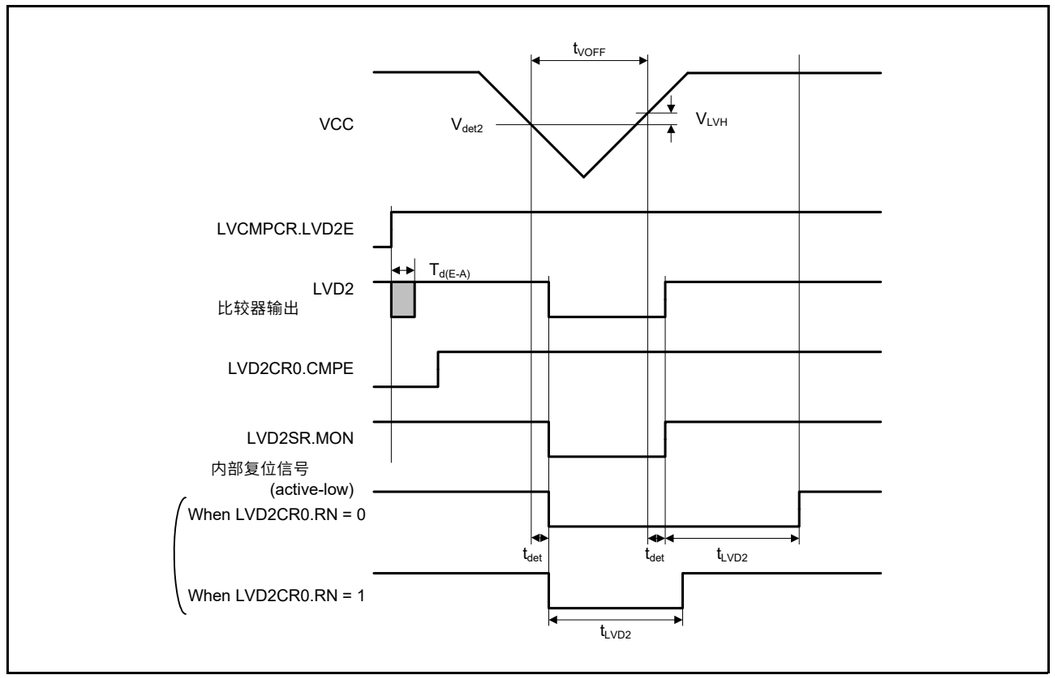

Figure 2.77 电压检测电路时序（Vdet2）

RA生态工作室

2.10 VBATT Characteristics

Table 2.58 Battery backup function characteristics

Conditions: VCC = AVCC0 = 1.6V to 5.5V, VBATT = 1.6 to 3.6 V

Parameter		Symbol	Min	Typ	Max	Unit	Test conditions
Voltage level for switching to battery backup (falling)		$V_{DETBATT}$	1.99	2.09	2.19	V	Figure 2.78, Figure 2.79
Hysteresis width for switching to battery back up		V_{VBATTH}	-	100	-	mV	
VCC-off period for starting power supply switching		$t_{VOFFBATT}$	300	-	-	μs	-
Voltage detection level VBATT_Power-on reset (VBATT_POR)		$V_{VBATPOR}$	1.30	1.40	1.50	V	Figure 2.78, Figure 2.79
Wait time after VBATT_POR reset time cancellation		$t_{VBATPOR}$	-	-	3	mS	-
Level for detection of voltage drop on the VBATT pin (falling)	VBTLVDLVL[1:0] = 10b	$V_{DETBATLVD}$	2.11	2.2	2.29	V	Figure 2.80
	VBTLVDLVL[1:0] = 11b		1.92	2	2.08	V	
Hysteresis width for VBATT pin LVD		$V_{VBATLVDTH}$	-	50	-	mV	
VBATT pin LVD operation stabilization time		t_{d_vbat}	-	-	300	μs	Figure 2.80
VBATT pin LVD response delay time		t_{det_vbat}	-	-	350	μs	
Allowable voltage change rising/falling gradient		dt/dVCC	1.0	-	-	ms/V	-
VCC voltage level for access to the VBATT backup registers		$V_{_BKBATT}$	1.8	-	-	V	-

Note: The VCC-off period for starting power supply switching indicates the period in which VCC is below the minimum value of the voltage level for switching to battery backup ($V_{DETBATT}$).

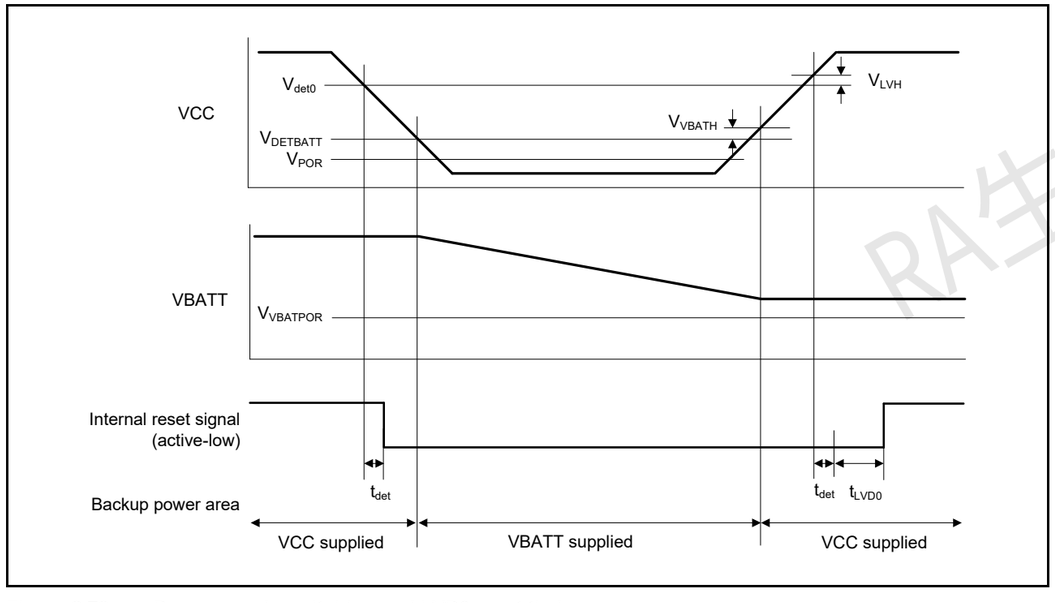

Figure 2.78 Power supply switching and LVD0 reset timing

2.10 VBATT Characteristics

Table 2.58 电池备份功能特点

Conditions: VCC = AVCC0 = 1.6V to 5.5V, VBATT = 1.6 to 3.6 V

Parameter		Symbol	Min	Typ	Max	Unit	测试条件
切换到备用电池的电压电平（下降）		$V_{DETBATT}$	1.99	2.09	2.19	V	Figure 2.78, Figure 2.79
切换到备用电池的滞后宽度		V_{VBATTH}	-	100	-	mV	
启动电源切换的VCC-off周期		$t_{VOFFBATT}$	300	-	-	μs	-
电压检测电平 VBATT_Power-on reset (VBATT_POR)		$V_{VBATPOR}$	1.30	1.40	1.50	V	Figure 2.78, Figure 2.79
VBATT_POR复位时间取消后的等待时间		$t_{VBATPOR}$	-	-	3	mS	-
VBATT引脚电压降检测电平（下降）	VBTLVDLVL[1:0] = 10b	$V_{DETBATLVD}$	2.11	2.2	2.29	V	Figure 2.80
	VBTLVDLVL[1:0] = 11b		1.92	2	2.08	V	
VBATT引脚LVD的迟滞宽度		$V_{VBATLVDTH}$	-	50	-	mV	
VBATT引脚LVD操作稳定时间		t_{d_vbat}	-	-	300	μs	Figure 2.80
VBATT引脚LVD响应延迟时间		t_{det_vbat}	-	-	350	μs	
允许电压变化上升下降梯度		dt/dVCC	1.0	-	-	ms/V	-
用于访问VBATT备份寄存器的VCC电压电平		$V_{_BKBATT}$	1.8	-	-	V	-

Note: 开始电源切换的VCC-off周期表示VCC低于切换到备用电池的电压电平最小值(VDETBATT)的周期。

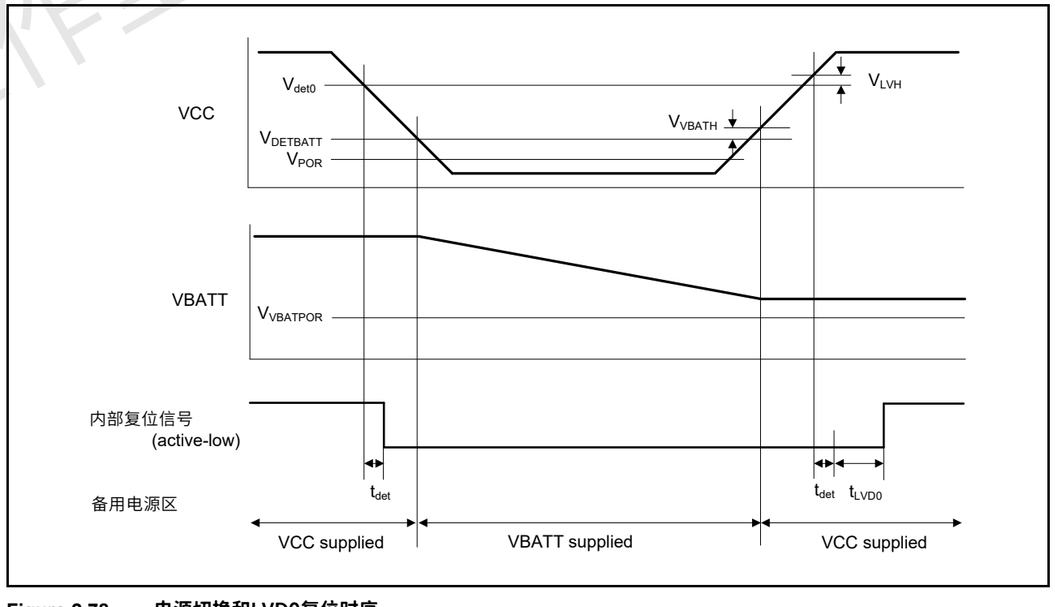

Figure 2.78 电源切换和LVD0复位时序

RA生态工作室

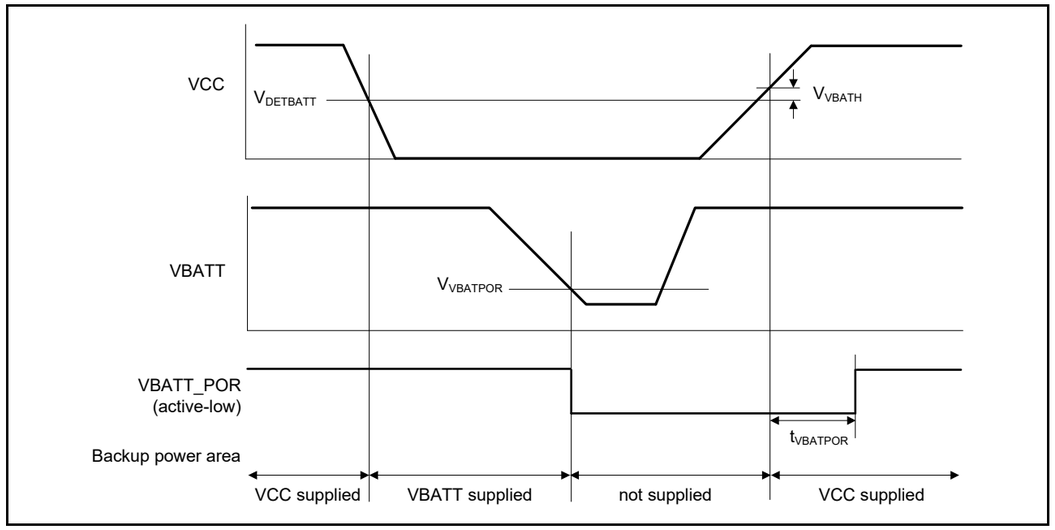

Figure 2.79 VBATT_POR reset timing

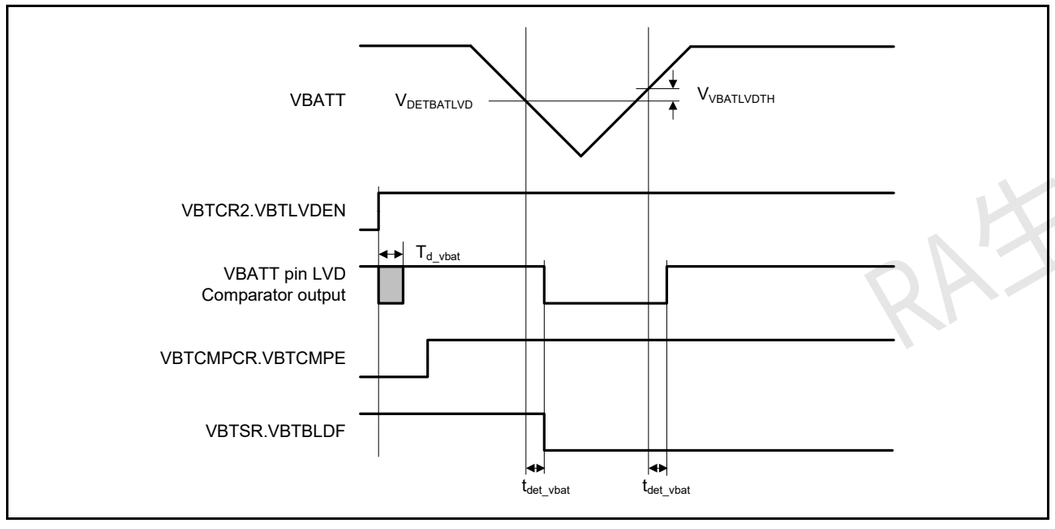

Figure 2.80 VBATT pin voltage detection circuit timing

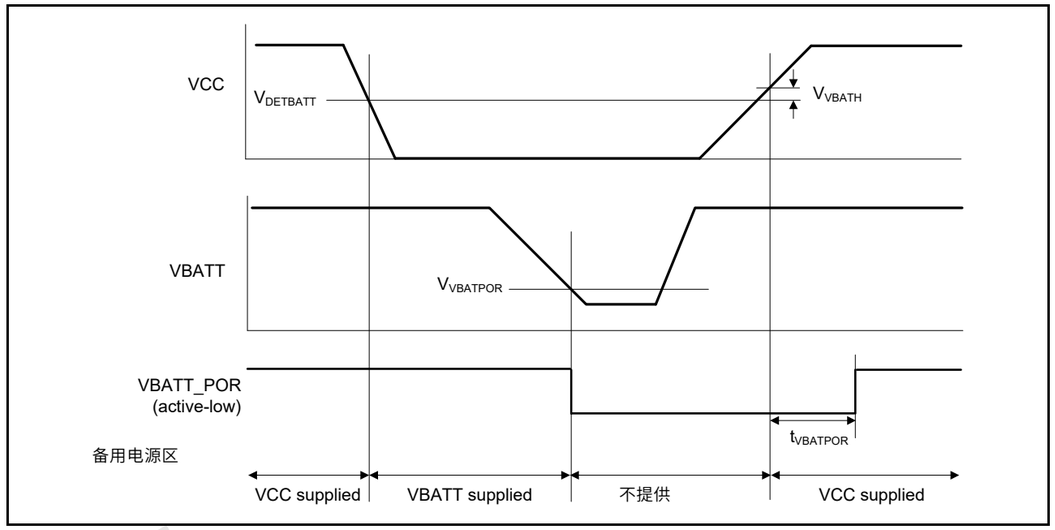

Figure 2.79 VBATT_POR复位时序

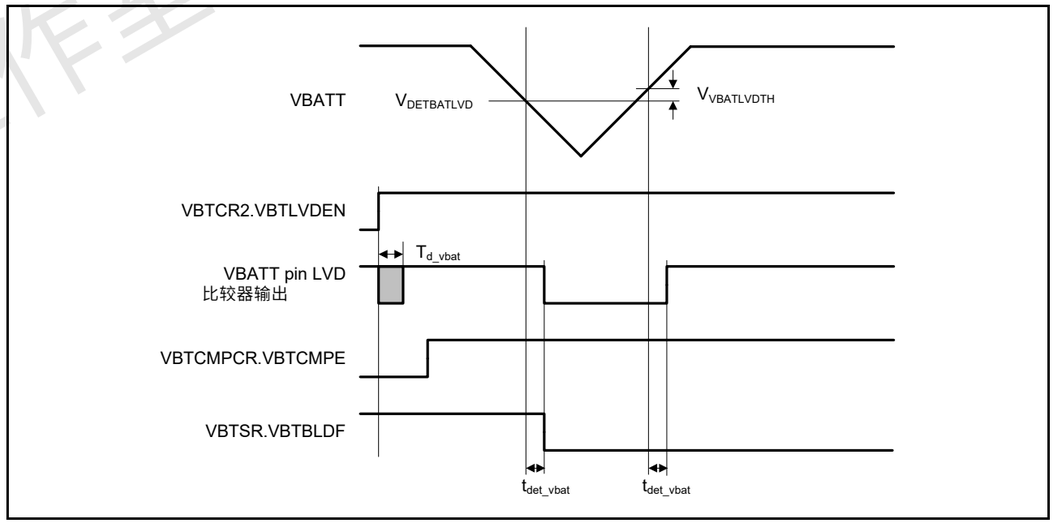

Figure 2.80 VBATT引脚电压检测电路时序

RA生态工作室

Table 2.59 VBATT-I/O characteristics

Parameter			Symbol	Min	Typ	Max	Unit	Test conditions
VBATWIOn I/O output characteristics (n = 0 to 2)	VCC > $V_{DETBATT}$	VCC = 4.0 to 5.5 V	V_{OH}	VCC - 0.8	-	-	V	I_{OH} = -200 μA
			V_{OL}	-	-	0.8		I_{OL} = 200 μA
		VCC = 2.7 to 4.0 V	V_{OH}	VCC - 0.5	-	-		I_{OH} = -100 μA
			V_{OL}	-	-	0.5		I_{OL} = 100 μA
		VCC = $V_{DETBATT}$ to 2.7 V	V_{OH}	VCC - 0.3	-	-		I_{OH} = -50 μA
			V_{OL}	-	-	0.3		I_{OL} = 50 μA
	VCC < $V_{DETBATT}$	VBATT = 2.7 to 3.6 V	V_{OH}	V_{BATT} - 0.5	-	-		I_{OH} = -100 μA
			V_{OL}	-	-	0.5		I_{OL} = 100 μA
		VBATT = 1.6 to 2.7 V	V_{OH}	V_{BATT} - 0.3	-	-		I_{OH} = -50 μA
			V_{OL}	-	-	0.3		I_{OL} = 50 μA

2.11 CTSU Characteristics

Table 2.60 CTSU characteristics

Conditions: VCC = AVCC0 = 1.8 to 5.5 V

Parameter	Symbol	Min	Typ	Max	Unit	Test conditions
External capacitance connected to TSCAP pin	C_{tscap}	9	10	11	nF	-
TS pin capacitive load	C_{base}	-	-	50	pF	-
Permissible output high current	ΣIoH	-	-	-24	mA	When the mutual capacitance method is applied

Table 2.59 VBATT-I/O characteristics

Parameter			Symbol	Min	Typ	Max	Unit	测试条件
VBATWIOnIO输出特性(n=0to2)	VCC > $V_{DETBATT}$	VCC = 4.0 to 5.5 V	V_{OH}	VCC - 0.8	-	-	V	I_{OH} = -200 μA
			V_{OL}	-	-	0.8		I_{OL} = 200 μA
		VCC = 2.7 to 4.0 V	V_{OH}	VCC - 0.5	-	-		I_{OH} = -100 μA
			V_{OL}	-	-	0.5		I_{OL} = 100 μA
		VCC = $V_{DETBATT}$ to 2.7 V	V_{OH}	VCC - 0.3	-	-		I_{OH} = -50 μA
			V_{OL}	-	-	0.3		I_{OL} = 50 μA
	VCC < $V_{DETBATT}$	VBATT = 2.7 to 3.6 V	V_{OH}	V_{BATT} - 0.5	-	-		I_{OH} = -100 μA
			V_{OL}	-	-	0.5		I_{OL} = 100 μA
		VBATT = 1.6 to 2.7 V	V_{OH}	V_{BATT} - 0.3	-	-		I_{OH} = -50 μA
			V_{OL}	-	-	0.3		I_{OL} = 50 μA

2.11 CTSU Characteristics

Table 2.60 CTSU characteristics

Conditions: VCC = AVCC0 = 1.8 to 5.5 V

Parameter	Symbol	Min	Typ	Max	Unit	测试条件
连接到TSCAP引脚的外部电容	C_{tscap}	9	10	11	nF	-
TS引脚容性负载	C_{base}	-	-	50	pF	-
允许输出大电流	ΣIoH	-	-	-24	mA	应用互电容法时

RA生态工作室

2.12 Segment LCD Controller Characteristics

2.12.1 Resistance Division Method

[Static Display Mode]

Table 2.61 Resistance division method LCD characteristics (1)

Conditions: VL4 ≤ VCC ≤ 5.5 V

Parameter	Symbol	Min	Typ	Max	Unit	Test conditions
LCD drive voltage	V_{L4}	2.0	-	VCC	V	-

[1/2 Bias Method, 1/4 Bias Method]

Table 2.62 Resistance division method LCD characteristics (2)

Conditions: VL4 ≤ VCC ≤ 5.5 V

Parameter	Symbol	Min	Typ	Max	Unit	Test conditions
LCD drive voltage	V_{L4}	2.7	-	VCC	V	-

[1/3 Bias Method]

Table 2.63 Resistance division method LCD characteristics (3)

Conditions: VL4 ≤ VCC ≤ 5.5 V

Parameter	Symbol	Min	Typ	Max	Unit	Test conditions
LCD drive voltage	V_{L4}	2.5	-	VCC	V	-

2.12.2 Internal Voltage Boosting Method

[1/3 Bias Method]

Table 2.64 Internal voltage boosting method LCD characteristics

Conditions: VCC = 1.8 V to 5.5 V

Parameter	Symbol	Conditions		Min	Typ	Max	Unit	Test conditions
LCD output voltage variation range	V_{L1}	C1 to C4*1 = 0.47 μF	VLCD = 04h	0.90	1.0	1.08	V	-
			VLCD = 05h	0.95	1.05	1.13	V	-
			VLCD = 06h	1.00	1.10	1.18	V	-
			VLCD = 07h	1.05	1.15	1.23	V	-
			VLCD = 08h	1.10	1.20	1.28	V	-
			VLCD = 09h	1.15	1.25	1.33	V	-
			VLCD = 0Ah	1.20	1.30	1.38	V	-
			VLCD = 0Bh	1.25	1.35	1.43	V	-
			VLCD = 0Ch	1.30	1.40	1.48	V	-
			VLCD = 0Dh	1.35	1.45	1.53	V	-
			VLCD = 0Eh	1.40	1.50	1.58	V	-
			VLCD = 0Fh	1.45	1.55	1.63	V	-
			VLCD = 10h	1.50	1.60	1.68	V	-
			VLCD = 11h	1.55	1.65	1.73	V	-
			VLCD = 12h	1.60	1.70	1.78	V	-
			VLCD = 13h	1.65	1.75	1.83	V	-
Doubler output voltage	V_{L2}	C1 to C4*1 = 0.47 μF		2 × V_{L1} - 0.1	2 × V_{L1}	2 × V_{L1}	V	-
Tripler output voltage	V_{L4}	C1 to C4*1 = 0.47 μF		3 × V_{L1} - 0.15	3 × V_{L1}	3 × V_{L1}	V	-
Reference voltage setup time*2	t_{VL1S}			5	-	-	ms	Figure 2.81
LCD output voltage variation range*3	t_{VLWT}	C1 to C4*1 = 0.47 μF		500	-	-	ms	

Note 1. This is a capacitor that is connected between voltage pins used to drive the LCD.

2.12 段式LCD控制器特性

2.12.1 电阻分割法

[Static Display Mode]

Table 2.61 电阻分法LCD特性（一）

Conditions: VL4 ≤ VCC ≤ 5.5 V

Parameter	Symbol	Min	Typ	Max	Unit	测试条件
液晶驱动电压	V_{L4}	2.0	-	VCC	V	-

[12偏置法，14偏置法]

Table 2.62 电阻分法LCD特性（二）

Conditions: VL4 ≤ VCC ≤ 5.5 V

Parameter	Symbol	Min	Typ	Max	Unit	测试条件
液晶驱动电压	V_{L4}	2.7	-	VCC	V	-

[1/3 Bias Method]

Table 2.63 电阻分法LCD特性（三）

Conditions: VL4 ≤ VCC ≤ 5.5 V

Parameter	Symbol	Min	Typ	Max	Unit	测试条件
液晶驱动电压	V_{L4}	2.5	-	VCC	V	-

2.12.2 内部升压方式

[1/3 Bias Method]

Table 2.64 内部升压方式LCD特性

Conditions: VCC = 1.8 V to 5.5 V

Parameter	Symbol	Conditions		Min	Typ	Max	Unit	测试条件
LCD输出电压变化范围	V_{L1}	C1 to C4*1 = 0.47 μF	VLCD = 04h	0.90	1.0	1.08	V	-
			VLCD = 05h	0.95	1.05	1.13	V	-
			VLCD = 06h	1.00	1.10	1.18	V	-
			VLCD = 07h	1.05	1.15	1.23	V	-
			VLCD = 08h	1.10	1.20	1.28	V	-
			VLCD = 09h	1.15	1.25	1.33	V	-
			VLCD = 0Ah	1.20	1.30	1.38	V	-
			VLCD = 0Bh	1.25	1.35	1.43	V	-
			VLCD = 0Ch	1.30	1.40	1.48	V	-
			VLCD = 0Dh	1.35	1.45	1.53	V	-
			VLCD = 0Eh	1.40	1.50	1.58	V	-
			VLCD = 0Fh	1.45	1.55	1.63	V	-
			VLCD = 10h	1.50	1.60	1.68	V	-
			VLCD = 11h	1.55	1.65	1.73	V	-
			VLCD = 12h	1.60	1.70	1.78	V	-
			VLCD = 13h	1.65	1.75	1.83	V	-
倍增器输出电压	V_{L2}	C1 to C4*1 = 0.47 μF		2 × V_{L1} - 0.1	2 × V_{L1}	2 × V_{L1}	V	-
三倍输出电压	V_{L4}	C1 to C4*1 = 0.47 μF		3 × V_{L1} - 0.15	3 × V_{L1}	3 × V_{L1}	V	-
参考电压建立时间*2	t_{VL1S}			5	-	-	ms	Figure 2.81
LCD输出电压变化范围*3	t_{VLWT}	C1 to C4*1 = 0.47 μF		500	-	-	ms	

Note 1. 这是一个连接在用于驱动LCD的电压引脚之间的电容器。

RA生态工作室

C1: A capacitor connected between CAPH and CAPL
C2: A capacitor connected between VL1 and GND
C3: A capacitor connected between VL2 and GND
C4: A capacitor connected between VL4 and GND
C1 = C2 = C3 = C4 = 0.47 μF ±30%.

Note 2. This is the time required to wait from when the reference voltage is specified using the VLCD register (or when the internal voltage boosting method is selected (by setting the MDSET[1:0] bits in the LCDM0 register to 01b) if the default value reference voltage is used) until voltage boosting starts (VLCON = 1).

Note 3. This is the wait time from when voltage boosting is started (VLCON = 1) until display is enabled (LCDON = 1).

[1/4 Bias Method]

Table 2.65 Internal voltage boosting method LCD characteristics

Conditions: VCC = 1.8 V to 5.5 V

Parameter	Symbol	Conditions		Min	Typ	Max	Unit	Test conditions
LCD output voltage variation range	V_{L1}	C1 to C5*1 = 0.47 μF	VLCD = 04h	0.90	1.0	1.08	V	-
			VLCD = 05h	0.95	1.05	1.13	V	-
			VLCD = 06h	1.00	1.10	1.18	V	-
			VLCD = 07h	1.05	1.15	1.23	V	-
			VLCD = 08h	1.10	1.20	1.28	V	-
			VLCD = 09h	1.15	1.25	1.33	V	-
			VLCD = 0Ah	1.20	1.30	1.38	V	-
			VLCD = 0Bh	1.25	1.35	1.43	V	-
			VLCD = 0Ch	1.30	1.40	1.48	V	-
Doubler output voltage	V_{L2}	C1 to C5*1 = 0.47 μF		$2V_{L1}$ - 0.08	$2V_{L1}$	$2V_{L1}$	V	-
Tripler output voltage	V_{L3}	C1 to C5*1 = 0.47 μF		$3V_{L1}$ - 0.12	$3V_{L1}$	$3V_{L1}$	V	-
Quadruply output voltage	V_{L4}*4	C1 to C5*1 = 0.47 μF		$4V_{L1}$ - 0.16	$4V_{L1}$	$4V_{L1}$	V	-
Reference voltage setup time*2	t_{VL1S}			5	-	-	ms	Figure 2.81
LCD output voltage variation range*3	t_{VLWT}	C1 to C5*1 = 0.47 μF		500	-	-	ms	

Note 1. This is a capacitor that is connected between voltage pins used to drive the LCD.
C1: A capacitor connected between CAPH and CAPL
C2: A capacitor connected between V_{L1} and GND
C3: A capacitor connected between V_{L2} and GND
C4: A capacitor connected between V_{L3} and GND
C5: A capacitor connected between V_{L4} and GND
C1 = C2 = C3 = C4 = C5 = 0.47 μF ± 30%

Note 2. This is the time required to wait from when the reference voltage is specified by using the VLCD register (or when the internal voltage boosting method is selected (by setting the MDSET1 and MDSET0 bits in the LCDM0 register to 01b) if the default value reference voltage is used) until voltage boosting starts (VLCON = 1).

Note 3. This is the wait time from when voltage boosting is started (VLCON = 1) until display is enabled (LCDON = 1).

Note 4. V_{L4} must be 5.5 V or lower.

C1：连接在CAPH和CAPL之间的电容器
C2：连接在VL1和GND之间的电容器C3：连接在VL2和GND之间的电容器C4：连接在VL4和GND之间的电容器
C1 = C2 = C3 = C4 = 0.47 μF ±30%.

Note 2. 这是从使用VLCD寄存器指定参考电压（或选择内部升压方法（通过将LCDM0寄存器中的MDSET[1:0]位设置为01b）如果默认值）所需的等待时间参考电压）直到升压开始（VLCON=1）。

Note 3. 这是从开始升压(VLCON=1)到启用显示(LCDON=1)的等待时间。

[1/4 Bias Method]

Table 2.65 内部升压方式LCD特性

Conditions: VCC = 1.8 V to 5.5 V

Parameter	Symbol	Conditions		Min	Typ	Max	Unit	测试条件
LCD输出电压变化范围	V_{L1}	C1 to C5*1 = 0.47 μF	VLCD = 04h	0.90	1.0	1.08	V	-
			VLCD = 05h	0.95	1.05	1.13	V	-
			VLCD = 06h	1.00	1.10	1.18	V	-
			VLCD = 07h	1.05	1.15	1.23	V	-
			VLCD = 08h	1.10	1.20	1.28	V	-
			VLCD = 09h	1.15	1.25	1.33	V	-
			VLCD = 0Ah	1.20	1.30	1.38	V	-
			VLCD = 0Bh	1.25	1.35	1.43	V	-
			VLCD = 0Ch	1.30	1.40	1.48	V	-
倍增器输出电压	V_{L2}	C1 to C5*1 = 0.47 μF		$2V_{L1}$ - 0.08	$2V_{L1}$	$2V_{L1}$	V	-
三倍输出电压	V_{L3}	C1 to C5*1 = 0.47 μF		$3V_{L1}$ - 0.12	$3V_{L1}$	$3V_{L1}$	V	-
四倍输出电压	V_{L4}*4	C1 to C5*1 = 0.47 μF		$4V_{L1}$ - 0.16	$4V_{L1}$	$4V_{L1}$	V	-
参考电压建立时间*2	t_{VL1S}			5	-	-	ms	Figure 2.81
LCD输出电压变化范围*3	t_{VLWT}	C1 to C5*1 = 0.47 μF		500	-	-	ms	

Note 1. 这是一个连接在用于驱动LCD的电压引脚之间的电容器。
C1：连接在CAPH和CAPL之间的电容器
C2：连接在VL1和GND之间的电容器C3：连接在VL2和GND之间的电容器C4：连接在VL3和GND之间的电容器C5：连接在VL4和GND之间的电容器

C1 = C2 = C3 = C4 = C5 = 0.47 μF ± 30%

Note 2. 这是从使用VLCD寄存器指定参考电压（或选择内部升压方法（通过将LCDM0寄存器中的MDSET1和MDSET0位设置为01b）如果默认值参考电压）所需的等待时间使用）直到升压开始（VLCON=1）。

Note 3. 这是从开始升压(VLCON=1)到启用显示(LCDON=1)的等待时间。

Note 4. VL4必须为5.5V或更低。

RA生态工作室

2.12.3 Capacitor Split Method

[1/3 Bias Method]

Table 2.66 Internal voltage boosting method LCD characteristics

Conditions: VCC = 2.2 V to 5.5 V

Parameter	Symbol	Conditions	Min	Typ	Max	Unit	Test conditions
VL4 voltage*1	V_{L4}	C1 to C4 = 0.47 μF*2	-	VCC	-	V	-
VL2 voltage*1	V_{L2}	C1 to C4 = 0.47 μF*2	2/3 × V_{L4} - 0.07	2/3 × V_{L4}	2/3 × V_{L4} + 0.07	V	-
VL1 voltage*1	V_{L1}	C1 to C4 = 0.47 μF*2	1/3 × V_{L4} - 0.08	1/3 × V_{L4}	1/3 × V_{L4} + 0.08	V	-
Capacitor split wait time*1	t_{WAIT}		100	-	-	ms	Figure 2.81

Note 1. This is the wait time from when voltage bucking is started (VLCON = 1) until display is enabled (LCDON = 1).
Note 2. This is a capacitor that is connected between voltage pins used to drive the LCD.
C1: A capacitor connected between CAPH and CAPL
C2: A capacitor connected between V_{L1} and GND
C3: A capacitor connected between V_{L2} and GND
C4: A capacitor connected between V_{L4} and GND
C1 = C2 = C3 = C4 = 0.47 μF ± 30%.

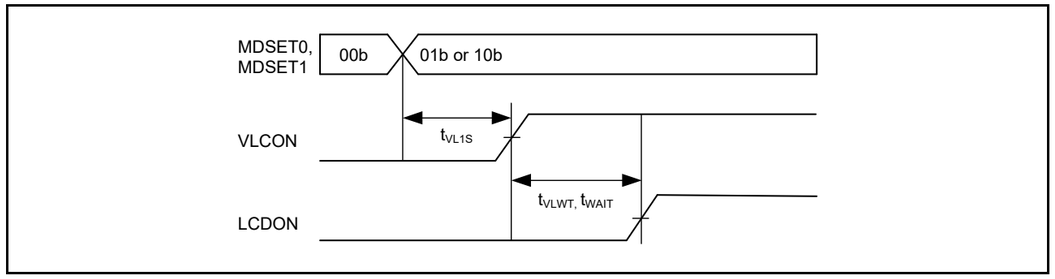

Figure 2.81 LCD reference voltage setup time, voltage boosting wait time, and capacitor split wait time

2.12.3 电容分割法

[1/3 Bias Method]

Table 2.66 内部升压方式LCD特性

Conditions: VCC = 2.2 V to 5.5 V

Parameter	Symbol	Conditions	Min	Typ	Max	Unit	测试条件
VL4 voltage*1	V_{L4}	C1 to C4 = 0.47 μF*2	-	VCC	-	V	-
VL2 voltage*1	V_{L2}	C1 to C4 = 0.47 μF*2	2/3 × V_{L4} - 0.07	2/3 × V_{L4}	2/3 × V_{L4} + 0.07	V	-
VL1 voltage*1	V_{L1}	C1 to C4 = 0.47 μF*2	1/3 × V_{L4} - 0.08	1/3 × V_{L4}	1/3 × V_{L4} + 0.08	V	-
电容分流等待时间*1	t_{WAIT}		100	-	-	ms	Figure 2.81

Note 1. 这是从开始降压(VLCON=1)到启用显示(LCDON=1)的等待时间。
Note 2. 这是一个连接在用于驱动LCD的电压引脚之间的电容器。
C1：连接在CAPH和CAPL之间的电容器
C2：连接在VL1和GND之间的电容器C3：连接在V
L2和GND之间的电容器C4：连接在VL4和GND之间
的电容器

C1 = C2 = C3 = C4 = 0.47 μF ± 30%.

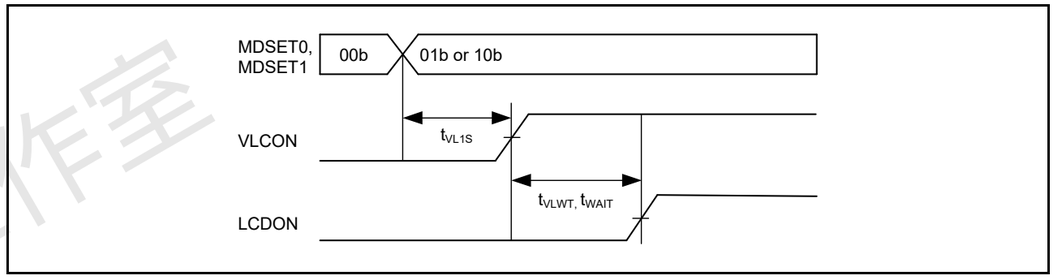

Figure 2.81 LCD参考电压建立时间、升压等待时间、电容分流等待时间

RA生态工作室

2.13 Comparator Characteristics

Table 2.67 ACMPLP characteristics
Conditions: VCC = 1.8 to 5.5 V

Parameter			Symbol	Min	Typ	Max	Unit	Test conditions
Reference voltage range	Standard mode	IVREFn (n= 0,1)	VREF	0	-	VCC-1.4	V	-
	Window mode*2	IVREF1	VREFH	1.4	-	VCC	V	-
		IVREF0	VREFL	0	-	VCC-1.4	V	-
Input voltage range			VI	0	-	VCC	V	-
Internal reference voltage			-	1.36	1.44	1.50	V	-
Output delay	High-speed mode		Td	-	-	1.2	μs	VCC = 3.0 Slew rate of input signal > 50 mV/μs
	Low-speed mode			-	-	5	μs	
	Window mode			-	-	2	μs	
Offset voltage*1	High-speed mode		-	-	-	50	mV	-
	Low-speed mode		-	-	-	40	mV	-
	Window mode		-	-	-	60	mV	-
Operation stabilization wait time			T_{cmp}	100	-	-	μs	-

Note 1. When 8-bit DAC output is used as the reference voltage, the offset voltage increases up to 2.5 x VCC/256.
Note 2. In window mode, be sure to satisfy the following condition: IVREF1 - IVREF0 ≥ 0.2 V.

2.13 比较器特性

Table 2.67 ACMPLP characteristics
Conditions: VCC = 1.8 to 5.5 V

Parameter			Symbol	Min	Typ	Max	Unit	测试条件
参考电压范围	标准模式	IVREFn (n= 0,1)	VREF	0	-	VCC-1.4	V	-
	Window mode*2	IVREF1	VREFH	1.4	-	VCC	V	-
		IVREF0	VREFL	0	-	VCC-1.4	V	-
输入电压范围			VI	0	-	VCC	V	-
内部参考电压			-	1.36	1.44	1.50	V	-
输出延迟	High-speed mode		Td	-	-	1.2	μs	VCC = 3.0 输入信号的压摆率>50mVμs
	Low-speed mode			-	-	5	μs	
	窗口模式			-	-	2	μs	
Offset voltage*1	High-speed mode		-	-	-	50	mV	-
	Low-speed mode		-	-	-	40	mV	-
	窗口模式		-	-	-	60	mV	-
运行稳定等待时间			T_{cmp}	100	-	-	μs	-

Note 1. 当使用8位DAC输出作为参考电压时，失调电压增加到2.5xVCC256。
Note 2. 在窗口模式下，请务必满足以下条件：IVREF1IVREF0≥0.2V。

RA生态工作室

2.14 OPAMP Characteristics

Table 2.68 OPAMP characteristics

Conditions: VCC = AVCC0 = 1.8 to 5.5 V (AVCC0 = VCC when VCC < 2.0 V)

Parameter	Symbol	Conditions		Min	Typ	Max	Unit
Common mode input range	Vicm1	Low power mode		0.2	-	AVCC0 - 0.5	V
	Vicm2	High-speed mode		0.3	-	AVCC0 - 0.6	V
Output voltage range	Vo1	Low power mode		0.1	-	AVCC0 - 0.1	V
	Vo2	High-speed mode		0.1	-	AVCC0 - 0.1	V
Input offset voltage	Vioff	3σ		-10	-	10	mV
Open gain	Av			60	120	-	dB
Gain-bandwidth (GB) product	GBW1	Low power mode		-	0.04	-	MHz
	GBW2	High-speed mode		-	1.7	-	MHz
Phase margin	PM	CL = 20 pF		50	-	-	deg
Gain margin	GM	CL = 20 pF		10	-	-	dB
Equivalent input noise	Vnoise1	f = 1 kHz	Low power mode	-	230	-	nV/√Hz
	Vnoise2	f = 10 kHz		-	200	-	nV/√Hz
	Vnoise3	f = 1 kHz	High-speed mode	-	90	-	nV/√Hz
	Vnoise4	f = 2 kHz		-	70	-	nV/√Hz
Power supply reduction ratio	PSRR			-	90	-	dB
Common mode signal reduction ratio	CMRR			-	90	-	dB
Stabilization wait time	Tstd1	CL = 20 pF Only operational amplifier is activated *1	Low power mode	650	-	-	μs
	Tstd2		High-speed mode	13	-	-	μs
	Tstd3	CL = 20 pF Operational amplifier and reference current circuit are activated simultaneously	Low power mode	650	-	-	μs
	Tstd4		High-speed mode	13	-	-	μs
Settling time	Tset1	CL = 20 pF	Low power mode	-	-	750	μs
	Tset2		High-speed mode	-	-	13	μs
Slew rate	Tslew1	CL = 20 pF	Low power mode	-	0.02	-	V/μs
	Tslew2		High-speed mode	-	1.1	-	V/μs
Load current	Iload1	Low-power mode		-100	-	100	μA
	Iload2	High-speed mode		-100	-	100	μA
Load capacitance	CL			-	-	20	pF

Note 1. When the operational amplifier reference current circuit is activated in advance.

2.14 OPAMP Characteristics

Table 2.68 OPAMP characteristics

条件：VCC=AVCC0=1.8至5.5V（当VCC<2.0V时，AVCC0=VCC）

Parameter	Symbol	Conditions		Min	Typ	Max	Unit
共模输入范围	Vicm1	低功耗模式		0.2	-	AVCC0 - 0.5	V
	Vicm2	High-speed mode		0.3	-	AVCC0 - 0.6	V
输出电压范围	Vo1	低功耗模式		0.1	-	AVCC0 - 0.1	V
	Vo2	High-speed mode		0.1	-	AVCC0 - 0.1	V
输入失调电压	Vioff	3σ		-10	-	10	mV
打开增益	Av			60	120	-	dB
Gain-bandwidth (GB) product	GBW1	低功耗模式		-	0.04	-	MHz
	GBW2	High-speed mode		-	1.7	-	MHz
相位裕度	PM	CL = 20 pF		50	-	-	deg
获得利润	GM	CL = 20 pF		10	-	-	dB
等效输入噪声	Vnoise1	f = 1 kHz	低功耗模式	-	230	-	nV/√Hz
	Vnoise2	f = 10 kHz		-	200	-	nV/√Hz
	Vnoise3	f = 1 kHz	High-speed mode	-	90	-	nV/√Hz
	Vnoise4	f = 2 kHz		-	70	-	nV/√Hz
电源减速比	PSRR			-	90	-	dB
共模信号衰减比	CMRR			-	90	-	dB
稳定等待时间	Tstd1	CL=20pF仅激活运算放大器*1	低功耗模式	650	-	-	μs
	Tstd2		High-speed mode	13	-	-	μs
	Tstd3	CL = 20 pF 运算放大器和参考电流电路同时启动	低功耗模式	650	-	-	μs
	Tstd4		High-speed mode	13	-	-	μs
稳定时间	Tset1	CL = 20 pF	低功耗模式	-	-	750	μs
	Tset2		High-speed mode	-	-	13	μs
转换率	Tslew1	CL = 20 pF	低功耗模式	-	0.02	-	V/μs
	Tslew2		High-speed mode	-	1.1	-	V/μs
负载电流	Iload1	Low-power mode		-100	-	100	μA
	Iload2	High-speed mode		-100	-	100	μA
负载电容	CL			-	-	20	pF

Note 1. 当运算放大器参考电流电路被预先激活时。

RA生态工作室

2.15 Flash Memory Characteristics

2.15.1 Code Flash Memory Characteristics

Table 2.69 Code flash characteristics (1)

Parameter		Symbol	Min	Typ	Max	Unit	Test conditions
Reprogramming/erasure cycle*1		N_{PEC}	1000	-	-	Times	-
Data hold time	After 1000 times of N_{PEC}	t_{DRP}	20*2, *3	-	-	Year	T_a = +85°C

Note 1. The reprogram/erase cycle is the number of erasures for each block. When the reprogram/erase cycle is n times (n = 1,000), erasing can be done n times for each block. For instance, when 8-byte programming is performed 256 times for different addresses in 2-KB blocks, and then the entire block is erased, the reprogram/erase cycle is counted as one. However, programming the same address for several times as one erasure is not enabled (overwriting is prohibited).
Note 2. Characteristic when using the flash memory programmer and the self-programming library provided by Renesas Electronics.
Note 3. This result is obtained from reliability testing.

Table 2.70 Code flash characteristics (2)
High-speed operating mode
Conditions: VCC = 2.7 to 5.5 V

Parameter		Symbol	FCLK = 1 MHz			FCLK = 32 MHz			Unit
			Min	Typ	Max	Min	Typ	Max	
Programming time	8-byte	t_{P8}	-	116	998	-	54	506	μs
Erasure time	2-KB	t_{E2K}	-	9.03	287	-	5.67	222	ms
Blank check time	8-byte	t_{BC8}	-	-	56.8	-	-	16.6	μs
	2-KB	t_{BC2K}	-	-	1899	-	-	140	μs
Erase suspended time		t_{SED}	-	-	22.5	-	-	10.7	μs
Startup area switching setting time		t_{SAS}	-	21.7	585	-	12.1	447	ms
Access window time		t_{AWS}	-	21.7	585	-	12.1	447	ms
OCD/serial programmer ID setting time		t_{OSIS}	-	21.7	585	-	12.1	447	ms
Flash memory mode transition wait time 1		t_{DIS}	2	-	-	2	-	-	μs
Flash memory mode transition wait time 2		t_{MS}	5	-	-	5	-	-	μs

Note: Does not include the time until each operation of the flash memory is started after instructions are executed by software.
Note: The lower-limit frequency of FCLK is 1 MHz during programming or erasing the flash memory. When using FCLK at below 4 MHz, the frequency can be set to 1 MHz, 2 MHz, or 3 MHz. A non-integer frequency such as 1.5 MHz cannot be set.
Note: The frequency accuracy of FCLK must be ±3.5%. Confirm the frequency accuracy of the clock source.

2.15 闪存特性

2.15.1 代码闪存特性

Table 2.69 码闪特性（一）

Parameter		Symbol	Min	Typ	Max	Unit	测试条件
Reprogramming/erasure cycle*1		N_{PEC}	1000	-	-	Times	-
数据保持时间	NPEC1000次后	t_{DRP}	20*2, *3	-	-	Year	T_a = +85°C

Note 1. 重新编程擦除周期是每个块的擦除次数。当重新编程擦除周期为n次（n=1 000）时，可以对每个块进行n次擦除。例如，当对2KB块中的不同地址执行256次8字节编程，然后擦除整个块时，重新编程擦除周期计为1。但是，不能将同一地址多次编程为一次擦除（禁止覆盖）。

Note 2. 使用瑞萨电子提供的闪存编程器和自编程库时的特性。
Note 3. 这个结果是从可靠性测试中获得的。

Table 2.70 码闪特性（二）
高速运行模式
Conditions: VCC = 2.7 to 5.5 V

Parameter		Symbol	FCLK = 1 MHz			FCLK = 32 MHz			Unit
			Min	Typ	Max	Min	Typ	Max	
编程时间	8-byte	t_{P8}	-	116	998	-	54	506	μs
擦除时间	2-KB	t_{E2K}	-	9.03	287	-	5.67	222	ms
空白检查时间	8-byte	t_{BC8}	-	-	56.8	-	-	16.6	μs
	2-KB	t_{BC2K}	-	-	1899	-	-	140	μs
擦除暂停时间		t_{SED}	-	-	22.5	-	-	10.7	μs
启动区切换设置时间		t_{SAS}	-	21.7	585	-	12.1	447	ms
访问窗口时间		t_{AWS}	-	21.7	585	-	12.1	447	ms
OCD串口编程器ID设置时间		t_{OSIS}	-	21.7	585	-	12.1	447	ms
闪存模式转换等待时间1		t_{DIS}	2	-	-	2	-	-	μs
闪存模式转换等待时间2		t_{MS}	5	-	-	5	-	-	μs

Note: 不包括软件执行指令后到闪存的每次操作开始的时间。
Note: 在对闪存进行编程或擦除时，FCLK的下限频率为1MHz。当使用低于4MHz的FCLK时，频率可以设置为1MHz、2MHz或3MHz。不能设置非整数频率，例如1.5MHz。
Note: FCLK的频率精度必须为±3.5%。确认时钟源的频率精度。

RA生态工作室

Table 2.71 Code flash characteristics (3)
Middle-speed operating mode
Conditions: VCC = 1.8 to 5.5 V, T_a = -40 to +85°C

Parameter		Symbol	FCLK = 1 MHz			FCLK = 8 MHz			Unit
			Min	Typ	Max	Min	Typ	Max	
Programming time	8-byte	t_{P8}	-	157	1411	-	101	966	μs
Erasure time	2-KB	t_{E2K}	-	9.10	289	-	6.10	228	ms
Blank check time	8-byte	t_{BC8}	-	-	87.7	-	-	52.5	μs
	2-KB	t_{BC2K}	-	-	1930	-	-	414	μs
Erase suspended time		t_{SED}	-	-	32.7	-	-	21.6	μs
Startup area switching setting time		t_{SAS}	-	22.5	592	-	14.0	464	ms
Access window time		t_{AWS}	-	22.5	592	-	14.0	464	ms
OCD/serial programmer ID setting time		t_{OSIS}	-	22.5	592	-	14.0	464	ms
Flash memory mode transition wait time 1		t_{DIS}	2	-	-	2	-	-	μs
Flash memory mode transition wait time 2		t_{MS}	720	-	-	720	-	-	ns

Note: Does not include the time until each operation of the flash memory is started after instructions are executed by software.
Note: The lower-limit frequency of FCLK is 1 MHz during programming or erasing the flash memory. When using FCLK at below 4 MHz, the frequency can be set to 1 MHz, 2 MHz, or 3 MHz. A non-integer frequency such as 1.5 MHz cannot be set.
Note: The frequency accuracy of FCLK must be ±3.5%. Confirm the frequency accuracy of the clock source.

2.15.2 Data Flash Memory Characteristics

Table 2.72 Data flash characteristics (1)

Parameter		Symbol	Min	Typ	Max	Unit	Test conditions
Reprogramming/erasure cycle*1		N_{DPEC}	100,000	1,000,000	-	Times	-
Data hold time	After 10,000 times of N_{DPEC}	t_{DDRP}	20*2, *3	-	-	Year	T_a = +85°C
	After 100,000 times of N_{DPEC}		5*2, *3	-	-	Year	
	After 1,000,000 times of N_{DPEC}		-	1*2, *3	-	Year	T_a = +25°C

Note 1. The reprogram/erase cycle is the number of erasure for each block. When the reprogram/erase cycle is n times (n = 100,000), erasing can be performed n times for each block. For instance, when 1-byte programming is performed 1,000 times for different addresses in 1-byte blocks, and then the entire block is erased, the reprogram/erase cycle is counted as one. However, programming the same address for several times as one erasure is not enabled. Overwriting is prohibited.
Note 2. Characteristics when using the flash memory programmer and the self-programming library provided by Renesas Electronics.
Note 3. These results are obtained from reliability testing.

Table 2.73 Data flash characteristics (2)
High-speed operating mode
Conditions: VCC = 2.7 to 5.5 V

Parameter		Symbol	FCLK = 4 MHz			FCLK = 32 MHz			Unit
			Min	Typ	Max	Min	Typ	Max	
Programming time	1-byte	t_{DP1}	-	52.4	463	-	42.1	387	μs
Erasure time	1-KB	t_{DE1K}	-	8.98	286	-	6.42	237	ms
Blank check time	1-byte	t_{DBC1}	-	-	24.3	-	-	16.6	μs
	1-KB	t_{DBC1K}	-	-	1872	-	-	512	μs
Suspended time during erasing		t_{DSED}	-	-	13.0	-	-	10.7	μs
Data flash STOP recovery time		t_{DSTOP}	5	-	-	5	-	-	μs

Note: Does not include the time until each operation of the flash memory is started after instructions are executed by software.
Note: The lower-limit frequency of FCLK is 1 MHz during programming or erasing the flash memory. When using FCLK at below 4 MHz, the frequency can be set to 1 MHz, 2 MHz, or 3 MHz. A non-integer frequency such as 1.5 MHz cannot be set.
Note: The frequency accuracy of FCLK must be ±3.5%. Confirm the frequency accuracy of the clock source.

Table 2.71 码闪特性（三）
中速运行模式
Conditions: VCC = 1.8 to 5.5 V, T_a = -40 to +85°C

Parameter		Symbol	FCLK = 1 MHz			FCLK = 8 MHz			Unit
			Min	Typ	Max	Min	Typ	Max	
编程时间	8-byte	t_{P8}	-	157	1411	-	101	966	μs
擦除时间	2-KB	t_{E2K}	-	9.10	289	-	6.10	228	ms
空白检查时间	8-byte	t_{BC8}	-	-	87.7	-	-	52.5	μs
	2-KB	t_{BC2K}	-	-	1930	-	-	414	μs
擦除暂停时间		t_{SED}	-	-	32.7	-	-	21.6	μs
启动区切换设置时间		t_{SAS}	-	22.5	592	-	14.0	464	ms
访问窗口时间		t_{AWS}	-	22.5	592	-	14.0	464	ms
OCD串口编程器ID设置时间		t_{OSIS}	-	22.5	592	-	14.0	464	ms
闪存模式转换等待时间1		t_{DIS}	2	-	-	2	-	-	μs
闪存模式转换等待时间2		t_{MS}	720	-	-	720	-	-	ns

Note: 不包括软件执行指令后到闪存的每次操作开始的时间。
Note: 在对闪存进行编程或擦除时，FCLK的下限频率为1MHz。当使用低于4MHz的FCLK时，频率可以设置为1MHz、2MHz或3MHz。不能设置非整数频率，例如1.5MHz。
Note: FCLK的频率精度必须为±3.5%。确认时钟源的频率精度。

2.15.2 数据闪存特性

Table 2.72 数据闪存特性（一）

Parameter		Symbol	Min	Typ	Max	Unit	测试条件
Reprogramming/erasure cycle*1		N_{DPEC}	100,000	1,000,000	-	Times	-
数据保持时间	NDPEC10 000次后	t_{DDRP}	20*2, *3	-	-	Year	T_a = +85°C
	NDPEC100 000次后		5*2, *3	-	-	Year	
	经过1 000 000次 N_{DPEC}		-	1*2, *3	-	Year	T_a = +25°C

Note 1. 重新编程擦除周期是每个块的擦除次数。当重新编程擦除周期为n次（n=100 000）时，可以对每个块执行n次擦除。例如，当对1字节块中的不同地址执行1 000次1字节编程，然后擦除整个块时，重新编程擦除周期计为1。但是，不能将同一地址多次编程为一次擦除。禁止覆盖。
Note 2. 使用瑞萨电子提供的闪存编程器和自编程库时的特性。
Note 3. 这些结果来自可靠性测试。

Table 2.73 数据闪存特性（2）
高速运行模式
Conditions: VCC = 2.7 to 5.5 V

Parameter		Symbol	FCLK = 4 MHz			FCLK = 32 MHz			Unit
			Min	Typ	Max	Min	Typ	Max	
编程时间	1-byte	t_{DP1}	-	52.4	463	-	42.1	387	μs
擦除时间	1-KB	t_{DE1K}	-	8.98	286	-	6.42	237	ms
空白检查时间	1-byte	t_{DBC1}	-	-	24.3	-	-	16.6	μs
	1-KB	t_{DBC1K}	-	-	1872	-	-	512	μs
擦除期间的暂停时间		t_{DSED}	-	-	13.0	-	-	10.7	μs
数据闪停恢复时间		t_{DSTOP}	5	-	-	5	-	-	μs

Note: 不包括软件执行指令后到闪存的每次操作开始的时间。
Note: 在对闪存进行编程或擦除时，FCLK的下限频率为1MHz。当使用低于4MHz的FCLK时，频率可以设置为1MHz、2MHz或3MHz。不能设置非整数频率，例如1.5MHz。
Note: FCLK的频率精度必须为±3.5%。确认时钟源的频率精度。

RA生态工作室

Table 2.74 Data flash characteristics (3)
Middle-speed operating mode
Conditions: VCC = 1.8 to 5.5 V, T_a = -40 to +85°C

Parameter		Symbol	FCLK = 4 MHz			FCLK = 8 MHz			Unit
			Min	Typ	Max	Min	Typ	Max	
Programming time	1-byte	t_{DP1}	-	94.7	886	-	89.3	849	μs
Erasure time	1-KB	t_{DE1K}	-	9.59	299	-	8.29	273	ms
Blank check time	1-byte	t_{DBC1}	-	-	56.2	-	-	52.5	μs
	1-KB	t_{DBC1K}	-	-	2.17	-	-	1.51	ms
Suspended time during erasing		t_{DSED}	-	-	23.0	-	-	21.7	μs
Data flash STOP recovery time		t_{DSTOP}	720	-	-	720	-	-	ns

Note: Does not include the time until each operation of the flash memory is started after instructions are executed by software.
Note: The lower-limit frequency of FCLK is 1 MHz during programming or erasing the flash memory. When using FCLK at below 4 MHz, the frequency can be set to 1 MHz, 2 MHz, or 3 MHz. A non-integer frequency such as 1.5 MHz cannot be set.
Note: The frequency accuracy of FCLK must be ±3.5%. Confirm the frequency accuracy of the clock source.

2.16 Boundary Scan

Table 2.75 Boundary scan
Conditions: VCC = AVCC0 = 2.4 to 5.5 V

Parameter	Symbol	Min	Typ	Max	Unit	Test conditions
TCK clock cycle time	t_{TCKcyc}	100	-	-	ns	Figure 2.82
TCK clock high pulse width	t_{TCKH}	45	-	-	ns	
TCK clock low pulse width	t_{TCKL}	45	-	-	ns	
TCK clock rise time	t_{TCKr}	-	-	5	ns	
TCK clock fall time	t_{TCKf}	-	-	5	ns	
TMS setup time	t_{TMSS}	20	-	-	ns	Figure 2.83
TMS hold time	t_{TMSH}	20	-	-	ns	
TDI setup time	t_{TDIS}	20	-	-	ns	
TDI hold time	t_{TDIH}	20	-	-	ns	
TDO data delay	t_{TDOD}	-	-	70	ns	
Boundary Scan circuit start up time*1	t_{BSSTUP}	t_{RESWP}	-	-	-	Figure 2.84

Note 1. Boundary scan does not function until power-on-reset becomes negative.

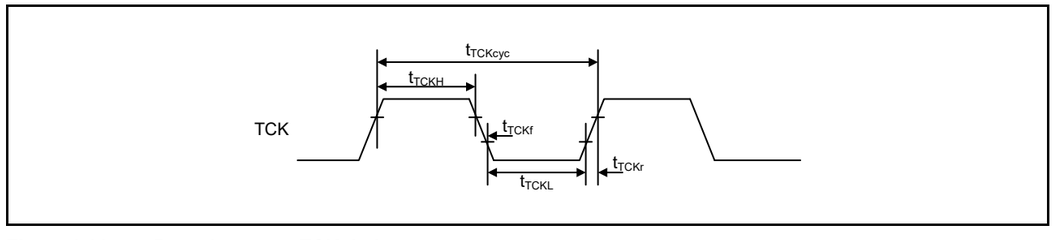

Figure 2.82 Boundary scan TCK timing

Table 2.74 数据闪存特性（3）
中速运行模式
Conditions: VCC = 1.8 to 5.5 V, T_a = -40 to +85°C

Parameter		Symbol	FCLK = 4 MHz			FCLK = 8 MHz			Unit
			Min	Typ	Max	Min	Typ	Max	
编程时间	1-byte	t_{DP1}	-	94.7	886	-	89.3	849	μs
擦除时间	1-KB	t_{DE1K}	-	9.59	299	-	8.29	273	ms
空白检查时间	1-byte	t_{DBC1}	-	-	56.2	-	-	52.5	μs
	1-KB	t_{DBC1K}	-	-	2.17	-	-	1.51	ms
擦除期间的暂停时间		t_{DSED}	-	-	23.0	-	-	21.7	μs
数据闪停恢复时间		t_{DSTOP}	720	-	-	720	-	-	ns

Note: 不包括软件执行指令后到闪存的每次操作开始的时间。
Note: 在对闪存进行编程或擦除时，FCLK的下限频率为1MHz。当使用低于4MHz的FCLK时，频率可以设置为1MHz、2MHz或3MHz。不能设置非整数频率，例如1.5MHz。
Note: FCLK的频率精度必须为±3.5%。确认时钟源的频率精度。

2.16 边界扫描

Table 2.75 边界扫描
Conditions: VCC = AVCC0 = 2.4 to 5.5 V

Parameter	Symbol	Min	Typ	Max	Unit	测试条件
TCK时钟周期时间	t_{TCKcyc}	100	-	-	ns	Figure 2.82
TCK时钟高脉冲宽度	t_{TCKH}	45	-	-	ns	
TCK时钟低脉冲宽度	t_{TCKL}	45	-	-	ns	
TCK时钟上升时间	t_{TCKr}	-	-	5	ns	
TCK时钟下降时间	t_{TCKf}	-	-	5	ns	
TMS设置时间	t_{TMSS}	20	-	-	ns	Figure 2.83
TMS保持时间	t_{TMSH}	20	-	-	ns	
TDI建立时间	t_{TDIS}	20	-	-	ns	
TDI保持时间	t_{TDIH}	20	-	-	ns	
TDO数据延迟	t_{TDOD}	-	-	70	ns	
边界扫描电路启动时间*1	t_{BSSTUP}	t_{RESWP}	-	-	-	Figure 2.84

Note 1. 在上电复位变为负值之前，边界扫描不起作用。

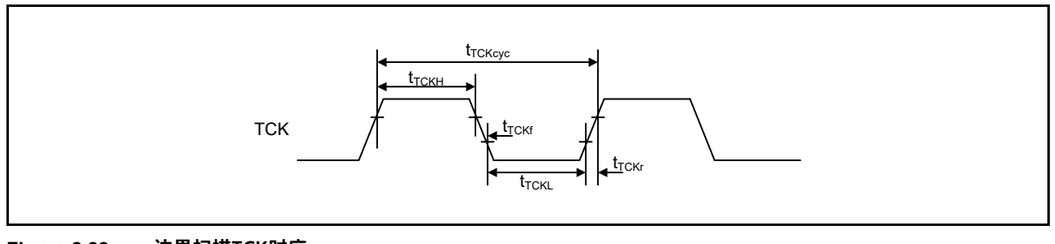

Figure 2.82 边界扫描TCK时序

RA生态工作室

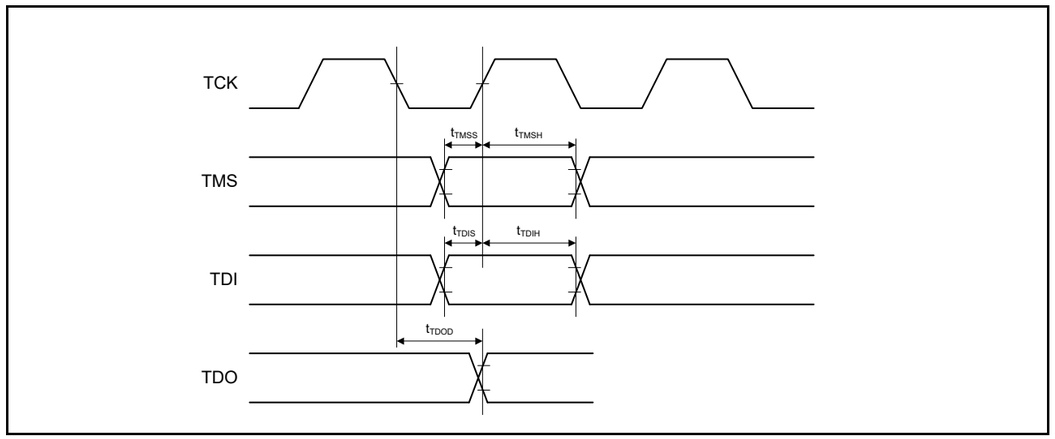

Figure 2.83 Boundary scan input/output timing

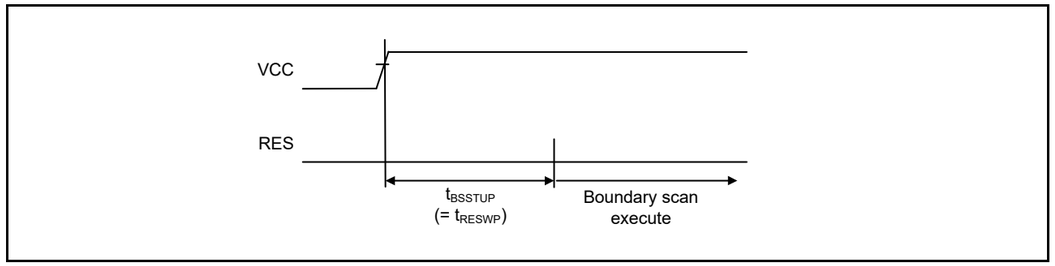

Figure 2.84 Boundary scan circuit start up timing

2.17 Joint Test Action Group (JTAG)

Table 2.76 JTAG (debug) characteristics (1)
Conditions: VCC = 2.4 to 5.5 V

Parameter	Symbol	Min	Typ	Max	Unit	Test conditions
TCK clock cycle time	t_{TCKcyc}	80	-	-	ns	Figure 2.85
TCK clock high pulse width	t_{TCKH}	35	-	-	ns	
TCK clock low pulse width	t_{TCKL}	35	-	-	ns	
TCK clock rise time	t_{TCKr}	-	-	5	ns	
TCK clock fall time	t_{TCKf}	-	-	5	ns	
TMS setup time	t_{TMSS}	16	-	-	ns	Figure 2.86
TMS hold time	t_{TMSH}	16	-	-	ns	
TDI setup time	t_{TDIS}	16	-	-	ns	
TDI hold time	t_{TDIH}	16	-	-	ns	
TDO data delay time	t_{TDOD}	-	-	70	ns	

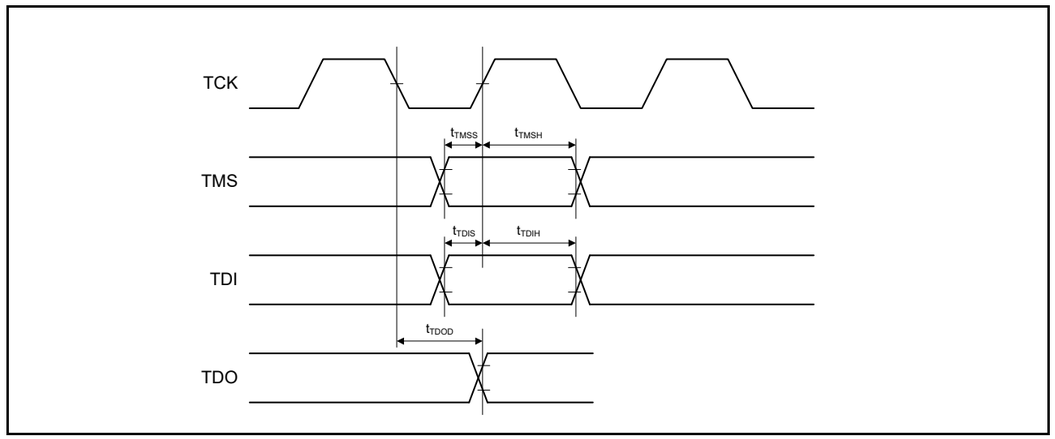

Figure 2.83 边界扫描输入输出时序

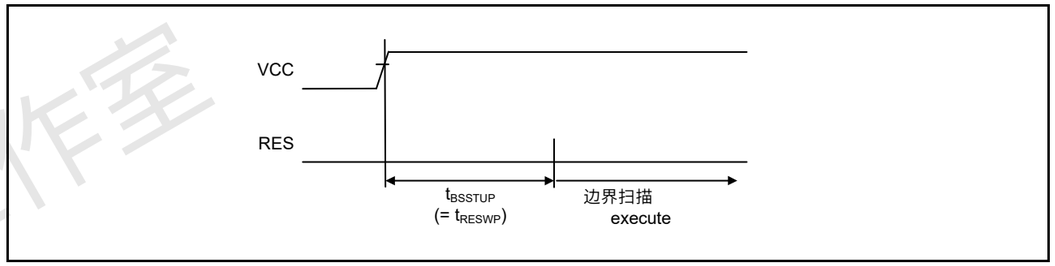

Figure 2.84 边界扫描电路启动时序

2.17 联合测试行动组(JTAG)

Table 2.76 JTAG (debug) characteristics (1)
Conditions: VCC = 2.4 to 5.5 V

Parameter	Symbol	Min	Typ	Max	Unit	测试条件
TCK时钟周期时间	t_{TCKcyc}	80	-	-	ns	Figure 2.85
TCK时钟高脉冲宽度	t_{TCKH}	35	-	-	ns	
TCK时钟低脉冲宽度	t_{TCKL}	35	-	-	ns	
TCK时钟上升时间	t_{TCKr}	-	-	5	ns	
TCK时钟下降时间	t_{TCKf}	-	-	5	ns	
TMS设置时间	t_{TMSS}	16	-	-	ns	Figure 2.86
TMS保持时间	t_{TMSH}	16	-	-	ns	
TDI建立时间	t_{TDIS}	16	-	-	ns	
TDI保持时间	t_{TDIH}	16	-	-	ns	
TDO数据延迟时间	t_{TDOD}	-	-	70	ns	

RA生态工作室

Table 2.77 JTAG (debug) characteristics (2)
Conditions: VCC = 1.6 to 2.4 V

Parameter	Symbol	Min	Typ	Max	Unit	Test conditions
TCK clock cycle time	t_{TCKcyc}	250	-	-	ns	Figure 2.85
TCK clock high pulse width	t_{TCKH}	120	-	-	ns	
TCK clock low pulse width	t_{TCKL}	120	-	-	ns	
TCK clock rise time	t_{TCKr}	-	-	5	ns	
TCK clock fall time	t_{TCKf}	-	-	5	ns	
TMS setup time	t_{TMSS}	50	-	-	ns	Figure 2.86
TMS hold time	t_{TMSH}	50	-	-	ns	
TDI setup time	t_{TDIS}	50	-	-	ns	
TDI hold time	t_{TDIH}	50	-	-	ns	
TDO data delay time	t_{TDOD}	-	-	150	ns	

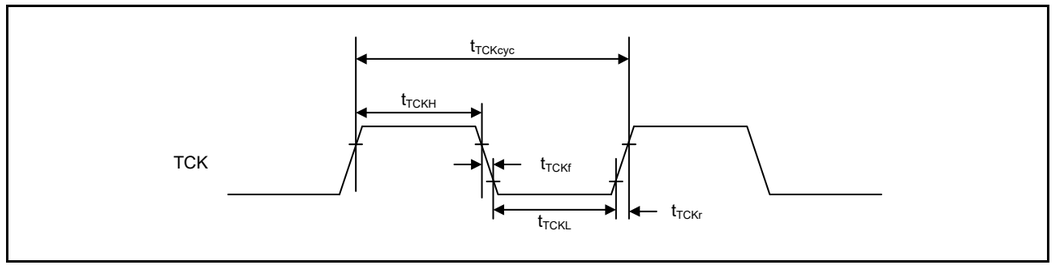

Figure 2.85 JTAG TCK timing

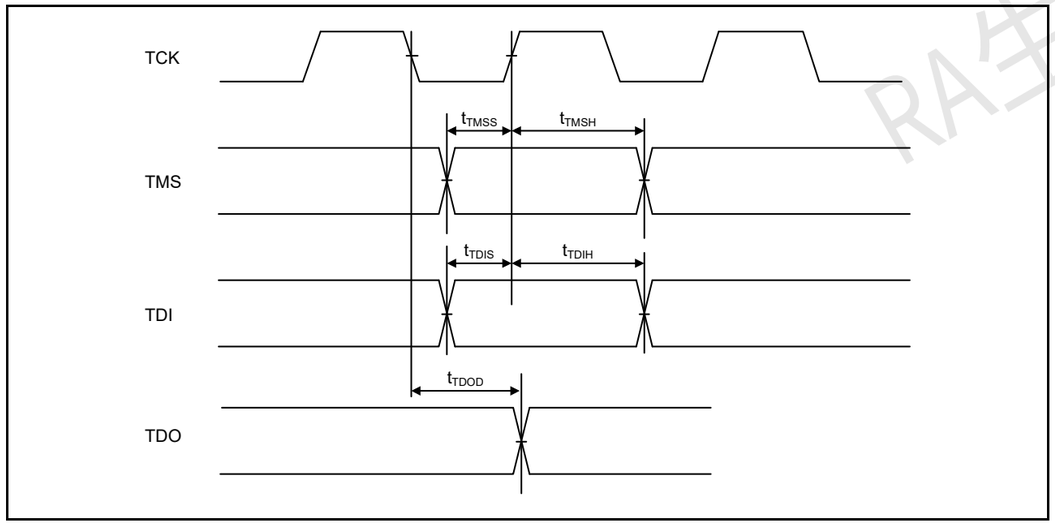

Figure 2.86 JTAG input/output timing

Table 2.77 JTAG (debug) characteristics (2)
Conditions: VCC = 1.6 to 2.4 V

Parameter	Symbol	Min	Typ	Max	Unit	测试条件
TCK时钟周期时间	t_{TCKcyc}	250	-	-	ns	Figure 2.85
TCK时钟高脉冲宽度	t_{TCKH}	120	-	-	ns	
TCK时钟低脉冲宽度	t_{TCKL}	120	-	-	ns	
TCK时钟上升时间	t_{TCKr}	-	-	5	ns	
TCK时钟下降时间	t_{TCKf}	-	-	5	ns	
TMS设置时间	t_{TMSS}	50	-	-	ns	Figure 2.86
TMS保持时间	t_{TMSH}	50	-	-	ns	
TDI建立时间	t_{TDIS}	50	-	-	ns	
TDI保持时间	t_{TDIH}	50	-	-	ns	
TDO数据延迟时间	t_{TDOD}	-	-	150	ns	

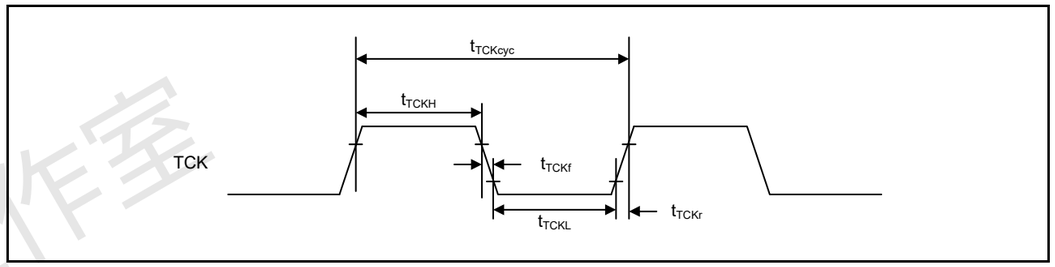

Figure 2.85 JTAG TCK timing

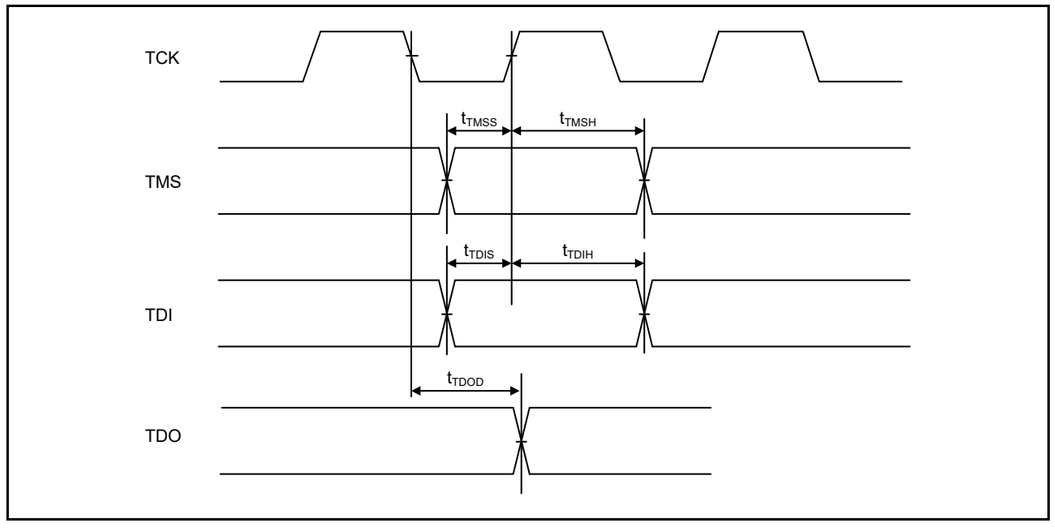

Figure 2.86 JTAG input/output timing

RA生态工作室

2.17.1 Serial Wire Debug (SWD)

Table 2.78 SWD characteristics (1)
Conditions: VCC = 2.4 to 5.5 V

Parameter	Symbol	Min	Typ	Max	Unit	Test conditions
SWCLK clock cycle time	$t_{SWCKcyc}$	80	-	-	ns	Figure 2.87
SWCLK clock high pulse width	t_{SWCKH}	35	-	-	ns	
SWCLK clock low pulse width	t_{SWCKL}	35	-	-	ns	
SWCLK clock rise time	t_{SWCKr}	-	-	5	ns	
SWCLK clock fall time	t_{SWCKf}	-	-	5	ns	
SWDIO setup time	t_{SWDS}	16	-	-	ns	Figure 2.88
SWDIO hold time	t_{SWDH}	16	-	-	ns	
SWDIO data delay time	t_{SWDD}	2	-	70	ns	

Table 2.79 SWD characteristics (2)
Conditions: VCC = 1.6 to 2.4 V

Parameter	Symbol	Min	Typ	Max	Unit	Test conditions
SWCLK clock cycle time	$t_{SWCKcyc}$	250	-	-	ns	Figure 2.87
SWCLK clock high pulse width	t_{SWCKH}	120	-	-	ns	
SWCLK clock low pulse width	t_{SWCKL}	120	-	-	ns	
SWCLK clock rise time	t_{SWCKr}	-	-	5	ns	
SWCLK clock fall time	t_{SWCKf}	-	-	5	ns	
SWDIO setup time	t_{SWDS}	50	-	-	ns	Figure 2.88
SWDIO hold time	t_{SWDH}	50	-	-	ns	
SWDIO data delay time	t_{SWDD}	2	-	150	ns	

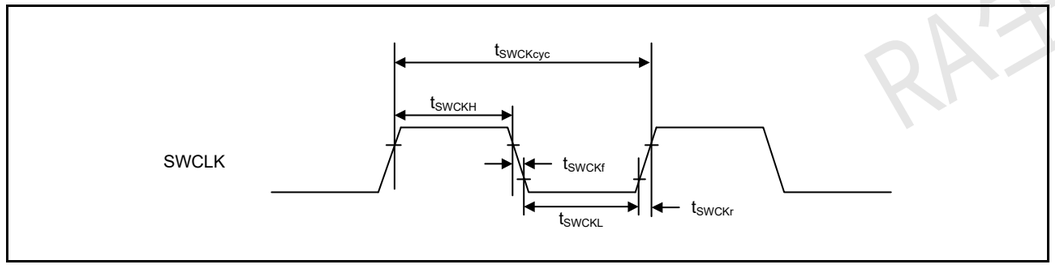

Figure 2.87 SWD SWCLK timing

2.17.1 串行线调试(SWD)

Table 2.78 SWD characteristics (1)
Conditions: VCC = 2.4 to 5.5 V

Parameter	Symbol	Min	Typ	Max	Unit	测试条件
SWCLK时钟周期时间	$t_{SWCKcyc}$	80	-	-	ns	Figure 2.87
SWCLK时钟高脉冲宽度	t_{SWCKH}	35	-	-	ns	
SWCLK时钟低脉冲宽度	t_{SWCKL}	35	-	-	ns	
SWCLK时钟上升时间	t_{SWCKr}	-	-	5	ns	
SWCLK时钟下降时间	t_{SWCKf}	-	-	5	ns	
SWDIO设置时间	t_{SWDS}	16	-	-	ns	Figure 2.88
SWDIO保持时间	t_{SWDH}	16	-	-	ns	
SWDIO数据延迟时间	t_{SWDD}	2	-	70	ns	

Table 2.79 SWD characteristics (2)
Conditions: VCC = 1.6 to 2.4 V

Parameter	Symbol	Min	Typ	Max	Unit	测试条件
SWCLK时钟周期时间	$t_{SWCKcyc}$	250	-	-	ns	Figure 2.87
SWCLK时钟高脉冲宽度	t_{SWCKH}	120	-	-	ns	
SWCLK时钟低脉冲宽度	t_{SWCKL}	120	-	-	ns	
SWCLK时钟上升时间	t_{SWCKr}	-	-	5	ns	
SWCLK时钟下降时间	t_{SWCKf}	-	-	5	ns	
SWDIO设置时间	t_{SWDS}	50	-	-	ns	Figure 2.88
SWDIO保持时间	t_{SWDH}	50	-	-	ns	
SWDIO数据延迟时间	t_{SWDD}	2	-	150	ns	

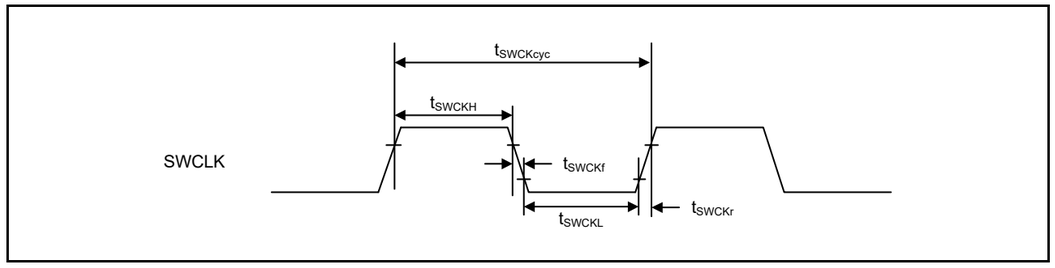

Figure 2.87 SWD SWCLK timing

RA生态工作室

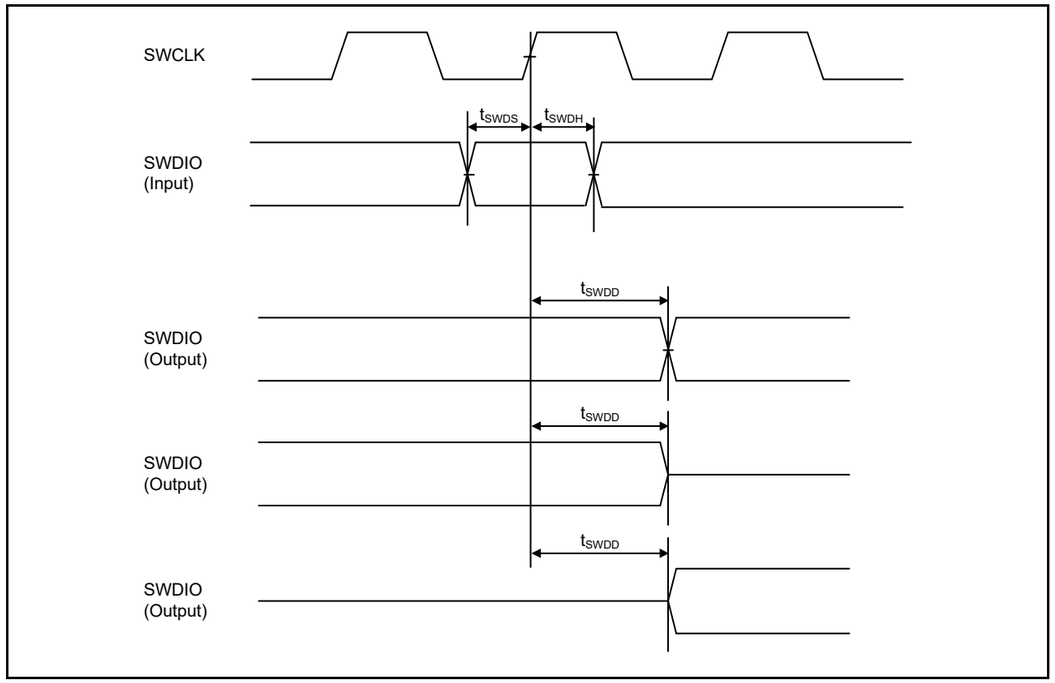

Figure 2.88 SWD input/output timing

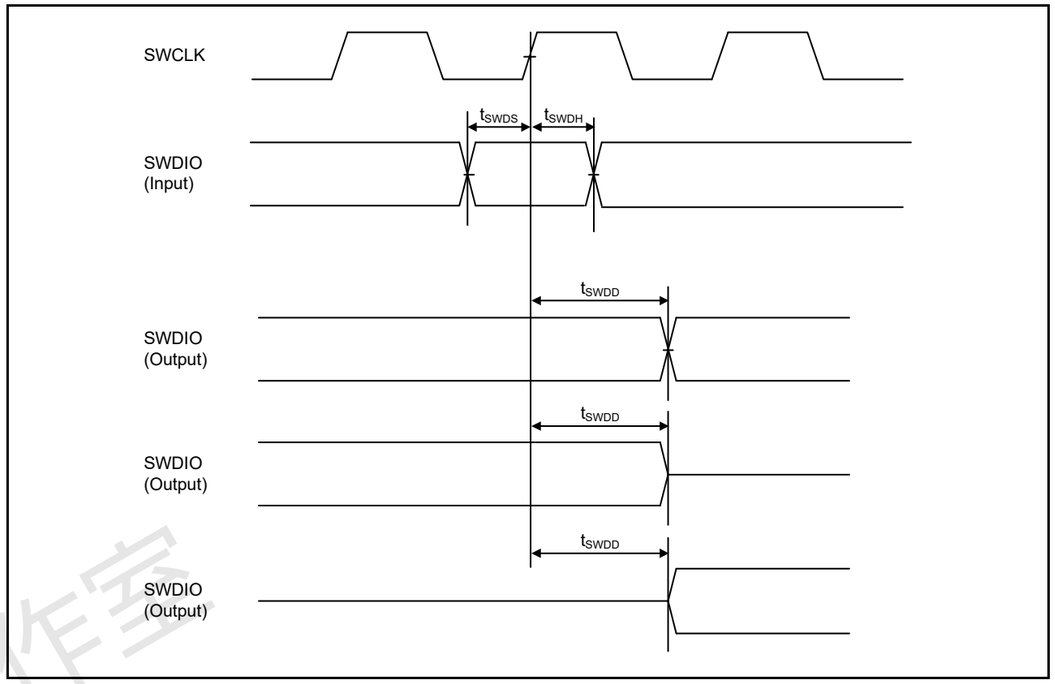

Figure 2.88 SWD input/output timing

RA生态工作室

Appendix 1.Package Dimensions

Information on the latest version of the package dimensions or mountings is shown in “Packages” on the Renesas Electronics Corporation website.

JEITA Package Code	RENESAS Code	Previous Code	MASS[Typ.]
P-TFLGA100-7x7-0.65	PTLG0100JA-A	100F0G	0.1g

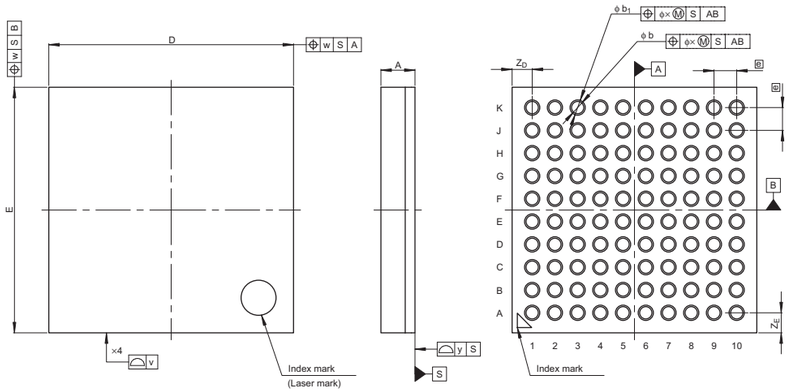

Reference Symbol	Dimension in Millimeters		
	Min	Nom	Max
D	—	7.0	—
E	—	7.0	—
v	—	—	0.15
w	—	—	0.20
A	—	—	1.05
e	—	0.65	—
b	0.31	0.35	0.39
b_1	0.385	0.435	0.485
x	—	—	0.08
y	—	—	0.10
Z_D	—	0.575	—
Z_E	—	0.575	—

Figure 1.1 100-pin LGA

附录1.包装尺寸

最新版本的封装尺寸或安装信息显示在瑞萨电子的“封装”中
电子公司网站。

JEITA包装代码	RENESAS Code	以前的代码	MASS[Typ.]
P-TFLGA100-7x7-0.65	PTLG0100JA-A	100F0G	0.1g

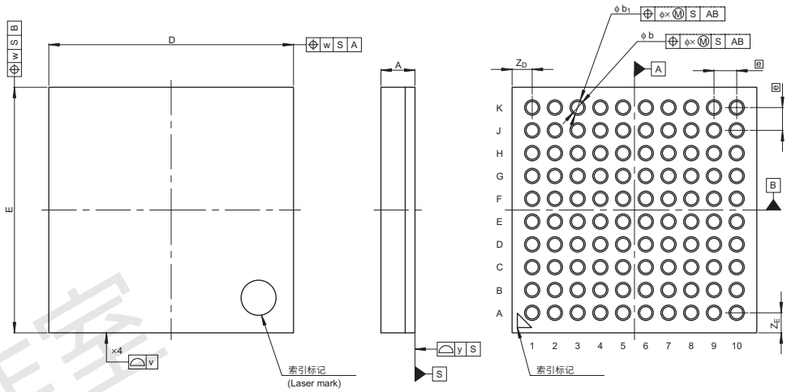

符号参考	以毫米为单位的尺寸		
	Min	Nom	Max
D	—	7.0	—
E	—	7.0	—
v	—	—	0.15
w	—	—	0.20
A	—	—	1.05
e	—	0.65	—
b	0.31	0.35	0.39
b_1	0.385	0.435	0.485
x	—	—	0.08
y	—	—	0.10
Z_D	—	0.575	—
Z_E	—	0.575	—

Figure 1.1 100-pin LGA

RA生态工作室

JEITA Package Code	RENESAS Code	Previous Code	MASS (Typ) [g]
P-LFQFP100-14x14-0.50	PLQP0100KB-B	—	0.6

Unit: mm

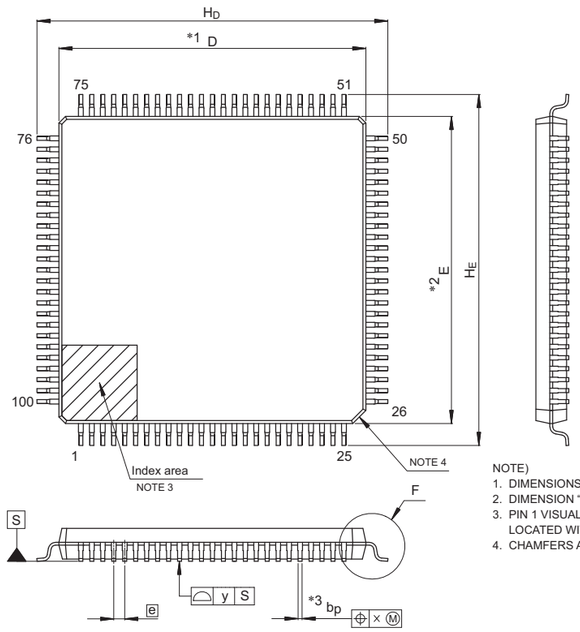

NOTE)
1. DIMENSIONS "*1" AND "*2" DO NOT INCLUDE MOLD FLASH.
2. DIMENSION "*3" DOES NOT INCLUDE TRIM OFFSET.
3. PIN 1 VISUAL INDEX FEATURE MAY VARY, BUT MUST BE LOCATED WITHIN THE HATCHED AREA.
4. CHAMFERS AT CORNERS ARE OPTIONAL, SIZE MAY VARY.

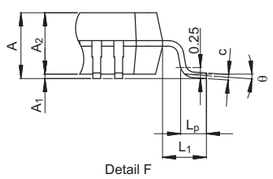

Reference Symbol	Dimensions in millimeters		
	Min	Nom	Max
D	13.9	14.0	14.1
E	13.9	14.0	14.1
A_2	—	1.4	—
H_D	15.8	16.0	16.2
H_E	15.8	16.0	16.2
A	—	—	1.7
A_1	0.05	—	0.15
b_p	0.15	0.20	0.27
c	0.09	—	0.20
θ	0°	3.5°	8°
e	—	0.5	—
x	—	—	0.08
y	—	—	0.08
L_p	0.45	0.6	0.75
L_1	—	1.0	—

© 2015 Renesas Electronics Corporation. All rights reserved.

Figure 1.2 100-pin LQFP

JEITA包装代码	RENESAS Code	以前的代码	MASS (Typ) [g]
P-LFQFP100-14x14-0.50	PLQP0100KB-B	—	0.6

Unit: mm

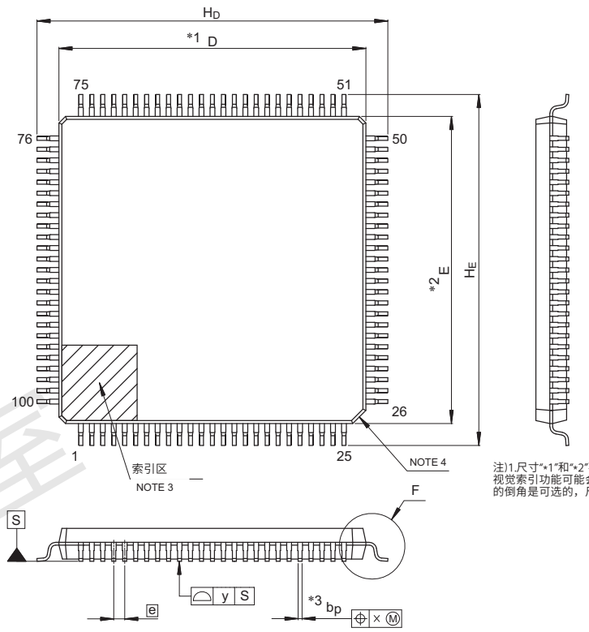

注)1.尺寸"*1"和"*2"不包括毛边。2.尺寸"*3"不包括微调偏移。3.PIN1视觉索引功能可能会有所不同，但必须位于阴影区域内。4.拐角处的倒角是可选的，尺寸可能会有所不同。

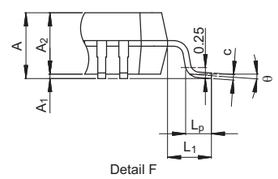

参考符号	尺寸以毫米为单位		
	Min	Nom	Max
D	13.9	14.0	14.1
E	13.9	14.0	14.1
A_2	—	1.4	—
H_D	15.8	16.0	16.2
H_E	15.8	16.0	16.2
A	—	—	1.7
A_1	0.05	—	0.15
b_p	0.15	0.20	0.27
c	0.09	—	0.20
θ	0°	3.5°	8°
e	—	0.5	—
x	—	—	0.08
y	—	—	0.08
L_p	0.45	0.6	0.75
L_1	—	1.0	—

©2015瑞萨电子公司。版权所有。

Figure 1.2 100-pin LQFP

嵌入式生态工作室

JEITA Package Code	RENESAS Code	Previous Code	MASS (Typ) [g]
P-LFQFP64-10x10-0.50	PLQP0064KB-C	—	0.3

Unit: mm

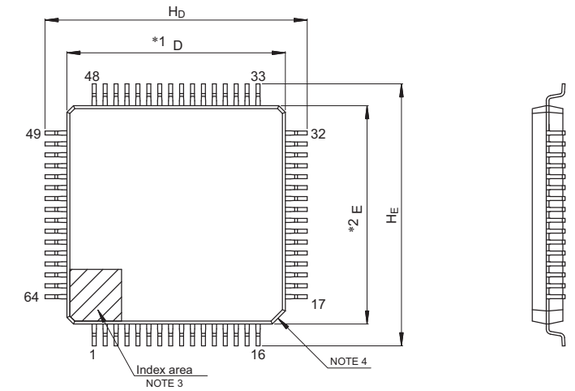

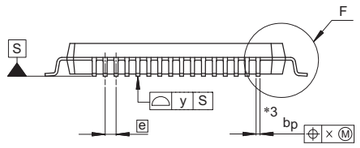

NOTE)
1. DIMENSIONS "*1" AND "*2" DO NOT INCLUDE MOLD FLASH.
2. DIMENSION "*3" DOES NOT INCLUDE TRIM OFFSET.
3. PIN 1 VISUAL INDEX FEATURE MAY VARY, BUT MUST BE LOCATED WITHIN THE HATCHED AREA.
4. CHAMFERS AT CORNERS ARE OPTIONAL, SIZE MAY VARY.

Reference Symbol	Dimensions in millimeters		
	Min	Nom	Max
D	9.9	10.0	10.1
E	9.9	10.0	10.1
A_2	—	1.4	—
H_D	11.8	12.0	12.2
H_E	11.8	12.0	12.2
A	—	—	1.7
A_1	0.05	—	0.15
b_p	0.15	0.20	0.27
c	0.09	—	0.20
θ	0°	3.5°	8°
e	—	0.5	—
x	—	—	0.08
y	—	—	0.08
L_p	0.45	0.6	0.75
L_1	—	1.0	—

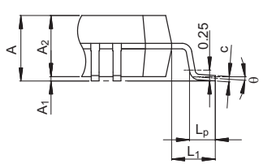

Detail F

© 2015 Renesas Electronics Corporation. All rights reserved.

Figure 1.3 64-pin LQFP

JEITA包装代码	RENESAS Code	以前的代码	MASS (Typ) [g]
P-LFQFP64-10x10-0.50	PLQP0064KB-C	—	0.3

Unit: mm

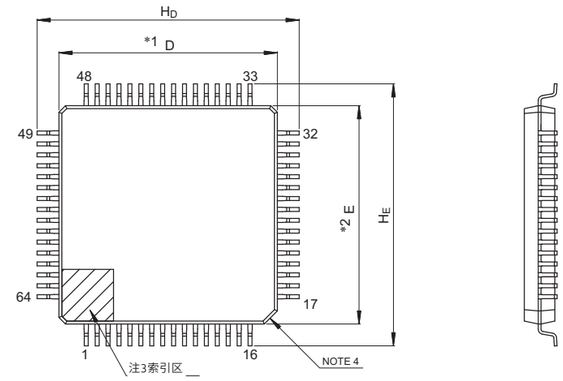

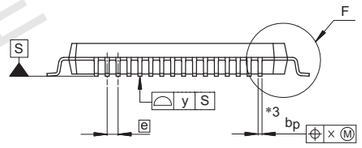

注)1.尺寸"*1"和"*2"不包括毛边。2.尺寸"*3"不包括微调偏移。3.PIN1视觉索引功能可能会有所不同。但必须位于阴影区域内。4.拐角处的倒角是可选的，尺寸可能会有所不同。

参考符号	尺寸以毫米为单位		
	Min	Nom	Max
D	9.9	10.0	10.1
E	9.9	10.0	10.1
A_2	—	1.4	—
H_D	11.8	12.0	12.2
H_E	11.8	12.0	12.2
A	—	—	1.7
A_1	0.05	—	0.15
b_p	0.15	0.20	0.27
c	0.09	—	0.20
θ	0°	3.5°	8°
e	—	0.5	—
x	—	—	0.08
y	—	—	0.08
L_p	0.45	0.6	0.75
L_1	—	1.0	—

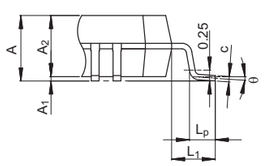

Detail F

©2015瑞萨电子公司。版权所有。

Figure 1.3 64-pin LQFP

RA生态工作室

JEITA Package code	RENESAS code	Previous code	MASS(TYP.)[g]
P-HWQFN64-8x8-0.40	PWQN0064LA-A	P64K8-40-9B5-3	0.16

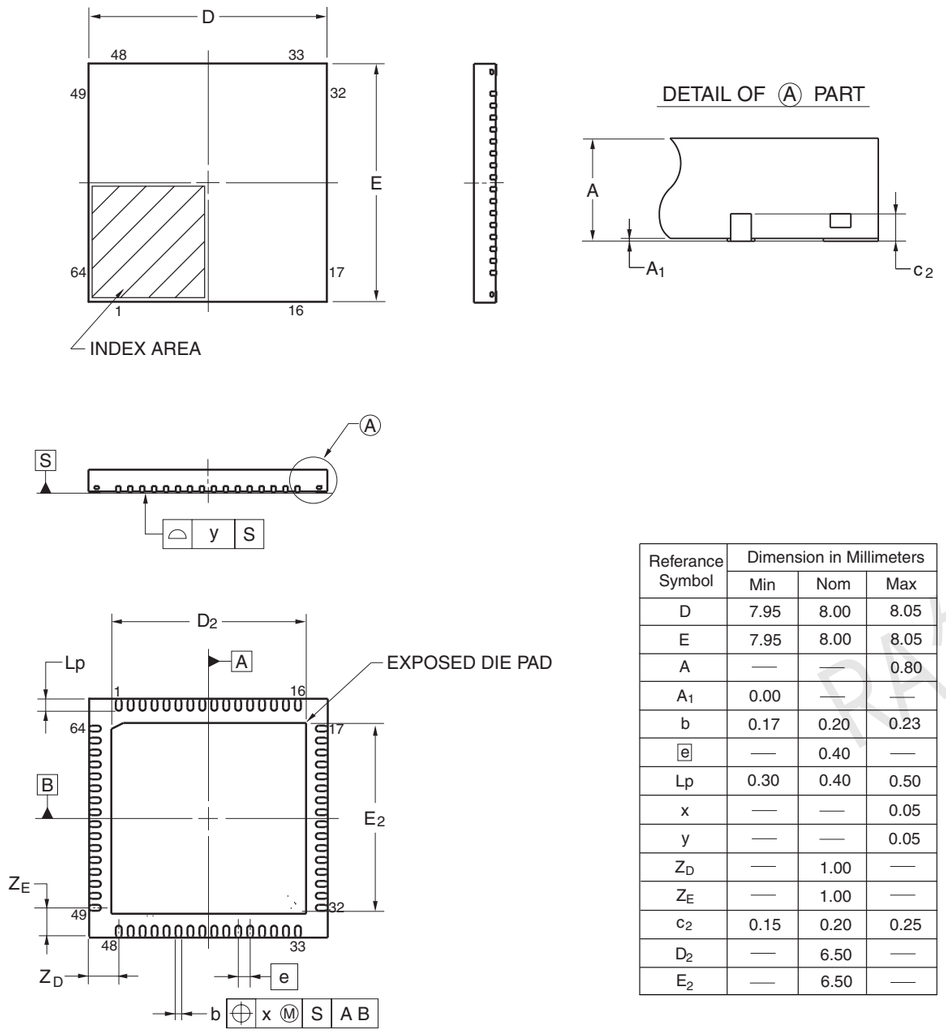

Referance Symbol	Dimension in Millimeters		
	Min	Nom	Max
D	7.95	8.00	8.05
E	7.95	8.00	8.05
A	—	—	0.80
A_1	0.00	—	—
b	0.17	0.20	0.23
e	—	0.40	—
Lp	0.30	0.40	0.50
x	—	—	0.05
y	—	—	0.05
Z_D	—	1.00	—
Z_E	—	1.00	—
c_2	0.15	0.20	0.25
D_2	—	6.50	—
E_2	—	6.50	—

©2013 Renesas Electronics Corporation. All rights reserved.

Figure 1.4 64-pin QFN

JEITA包装代码	RENESAS code	以前的代码	MASS(TYP.)[g]
P-HWQFN64-8x8-0.40	PWQN0064LA-A	P64K8-40-9B5-3	0.16

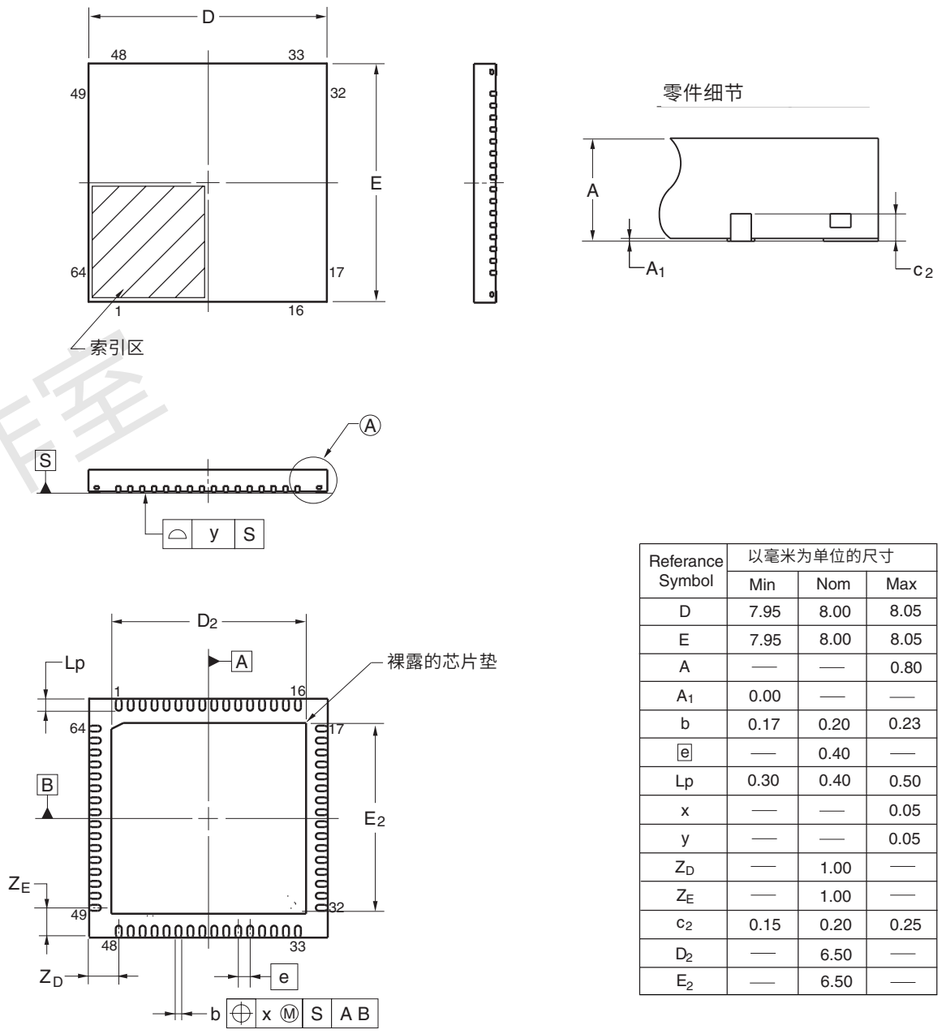

Referance Symbol	以毫米为单位的尺寸		
	Min	Nom	Max
D	7.95	8.00	8.05
E	7.95	8.00	8.05
A	—	—	0.80
A_1	0.00	—	—
b	0.17	0.20	0.23
e	—	0.40	—
Lp	0.30	0.40	0.50
x	—	—	0.05
y	—	—	0.05
Z_D	—	1.00	—
Z_E	—	1.00	—
c_2	0.15	0.20	0.25
D_2	—	6.50	—
E_2	—	6.50	—

©2013瑞萨电子公司。版权所有。

Figure 1.4 64-pin QFN

RA生态工作室

JEITA Package Code	RENESAS Code	Previous Code	MASS (Typ) [g]
P-LFQFP48-7x7-0.50	PLQP0048KB-B	—	0.2

Unit: mm

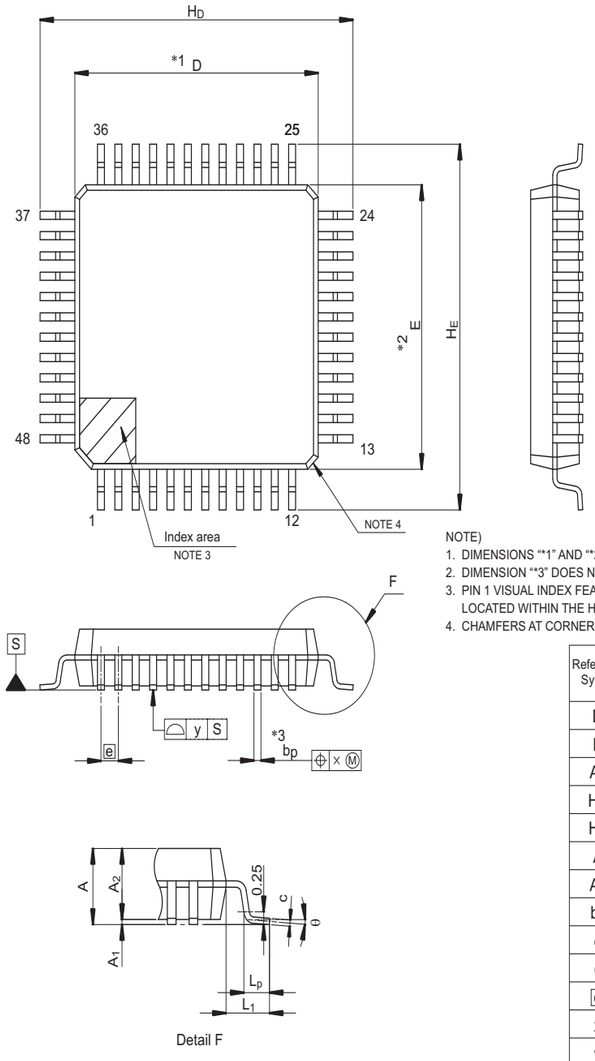

NOTE)
1. DIMENSIONS "*1" AND "*2" DO NOT INCLUDE MOLD FLASH.
2. DIMENSION "*3" DOES NOT INCLUDE TRIM OFFSET.
3. PIN 1 VISUAL INDEX FEATURE MAY VARY, BUT MUST BE LOCATED WITHIN THE HATCHED AREA.
4. CHAMFERS AT CORNERS ARE OPTIONAL, SIZE MAY VARY.

Reference Symbol	Dimensions in millimeters		
	Min	Nom	Max
D	6.9	7.0	7.1
E	6.9	7.0	7.1
A_2	—	1.4	—
H_D	8.8	9.0	9.2
H_E	8.8	9.0	9.2
A	—	—	1.7
A_1	0.05	—	0.15
b_p	0.17	0.20	0.27
c	0.09	—	0.20
θ	0°	3.5°	8°
e	—	0.5	—
x	—	—	0.08
y	—	—	0.08
L_p	0.45	0.6	0.75
L_1	—	1.0	—

Figure 1.5 48-pin LQFP

JEITA包装代码	RENESAS Code	以前的代码	MASS (Typ) [g]
P-LFQFP48-7x7-0.50	PLQP0048KB-B	—	0.2

Unit: mm

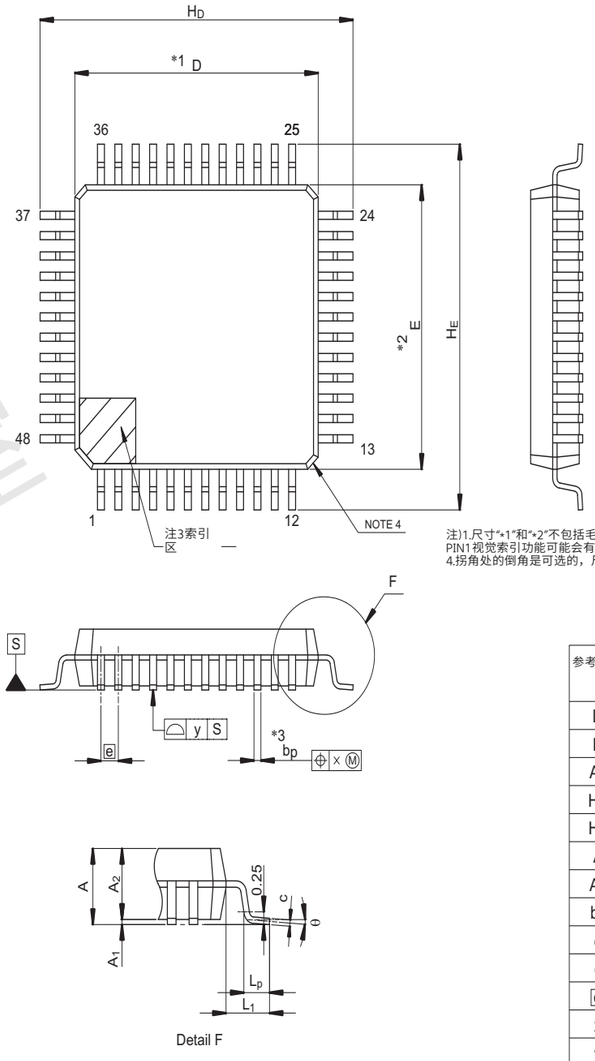

注)1.尺寸"*1"和"*2"不包括毛边。2.尺寸"*3"不包括微调偏移。3. PIN1视觉索引功能可能会有所不同，但必须位于阴影区域内。
4.拐角处的倒角是可选的，尺寸可能会有所不同。

参考符号	尺寸以毫米为单位		
	Min	Nom	Max
D	6.9	7.0	7.1
E	6.9	7.0	7.1
A_2	—	1.4	—
H_D	8.8	9.0	9.2
H_E	8.8	9.0	9.2
A	—	—	1.7
A_1	0.05	—	0.15
b_p	0.17	0.20	0.27
c	0.09	—	0.20
θ	0°	3.5°	8°
e	—	0.5	—
x	—	—	0.08
y	—	—	0.08
L_p	0.45	0.6	0.75
L_1	—	1.0	—

Figure 1.5 48-pin LQFP

RA生态工作室

JEITA Package code	RENESAS code	Previous code	MASS(TYP.)[g]
P-HWQFN48-7x7-0.50	PWQN0048KB-A	48PJN-A P48K8-50-5B4-6	0.13

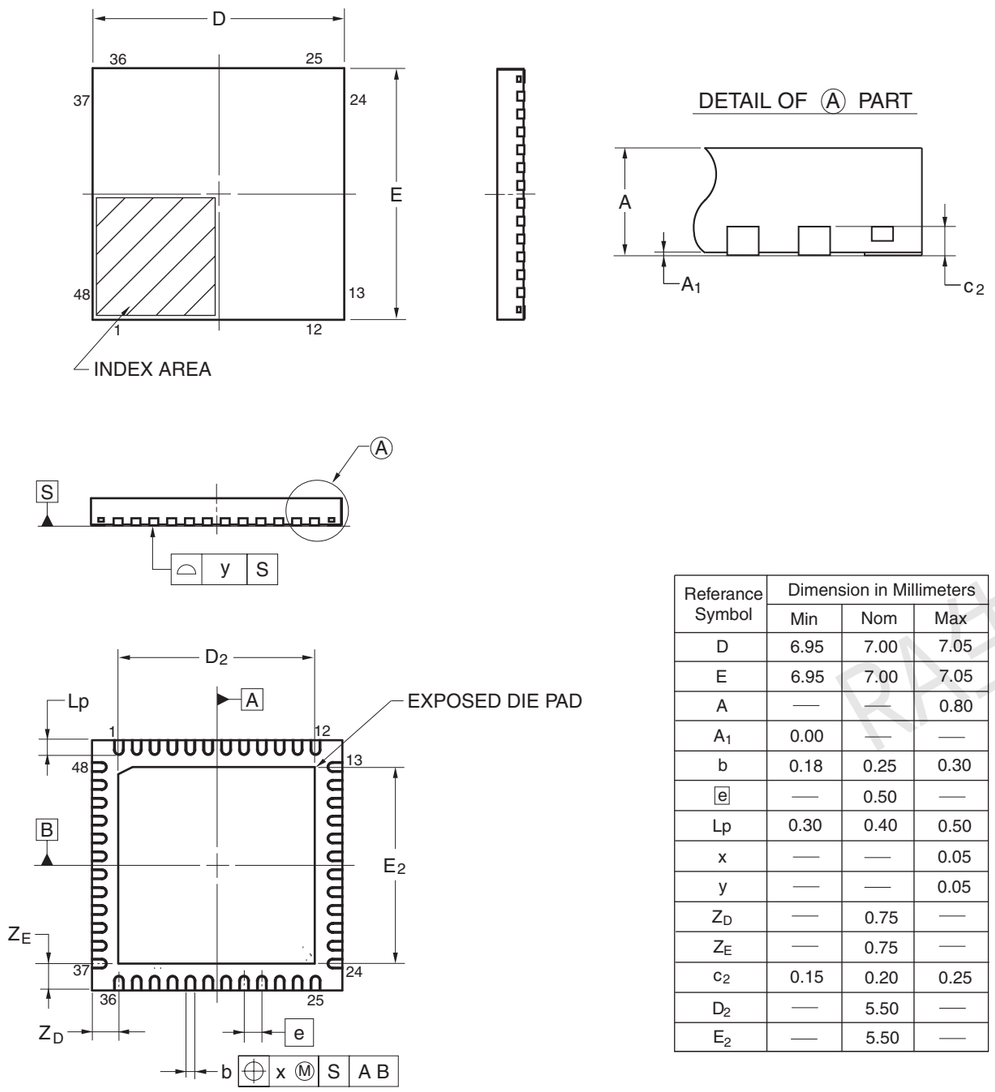

Referance Symbol	Dimension in Millimeters		
	Min	Nom	Max
D	6.95	7.00	7.05
E	6.95	7.00	7.05
A	—	—	0.80
A_1	0.00	—	—
b	0.18	0.25	0.30
e	—	0.50	—
Lp	0.30	0.40	0.50
x	—	—	0.05
y	—	—	0.05
Z_D	—	0.75	—
Z_E	—	0.75	—
c_2	0.15	0.20	0.25
D_2	—	5.50	—
E_2	—	5.50	—

©2013 Renesas Electronics Corporation. All rights reserved.

Figure 1.6 48-pin QFN

JEITA包装代码	RENESAS code	以前的代码	MASS(TYP.)[g]
P-HWQFN48-7x7-0.50	PWQN0048KB-A	48PJN-A P48K8-50-5B4-6	0.13

Referance Symbol	以毫米为单位的尺寸		
	Min	Nom	Max
D	6.95	7.00	7.05
E	6.95	7.00	7.05
A	—	—	0.80
A_1	0.00	—	—
b	0.18	0.25	0.30
e	—	0.50	—
Lp	0.30	0.40	0.50
x	—	—	0.05
y	—	—	0.05
Z_D	—	0.75	—
Z_E	—	0.75	—
c_2	0.15	0.20	0.25
D_2	—	5.50	—
E_2	—	5.50	—

©2013瑞萨电子公司。版权所有。

Figure 1.6 48-pin QFN

RA生态工作室

JEITA Package code	RENESAS code	Previous code	MASS(TYP.)[g]
P-HWQFN40-6x6-0.50	PWQN0040KC-A	P40K8-50-4B4-5	0.09

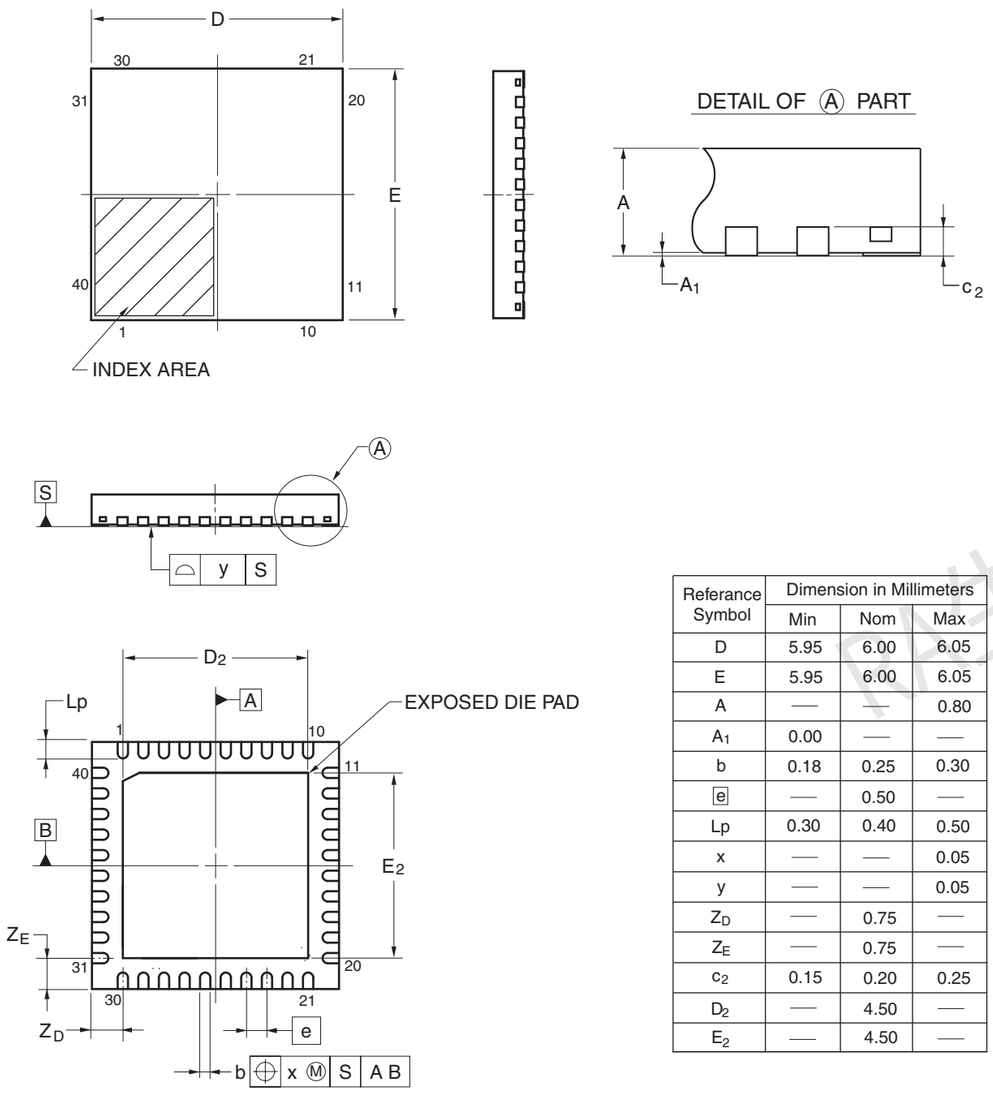

Referance Symbol	Dimension in Millimeters		
	Min	Nom	Max
D	5.95	6.00	6.05
E	5.95	6.00	6.05
A	—	—	0.80
A_1	0.00	—	—
b	0.18	0.25	0.30
e	—	0.50	—
Lp	0.30	0.40	0.50
x	—	—	0.05
y	—	—	0.05
Z_D	—	0.75	—
Z_E	—	0.75	—
c_2	0.15	0.20	0.25
D_2	—	4.50	—
E_2	—	4.50	—

Figure 1.7 40-pin QFN

JEITA包装代码	RENESAS code	以前的代码	MASS(TYP.)[g]
P-HWQFN40-6x6-0.50	PWQN0040KC-A	P40K8-50-4B4-5	0.09

Referance Symbol	以毫米为单位的尺寸		
	Min	Nom	Max
D	5.95	6.00	6.05
E	5.95	6.00	6.05
A	—	—	0.80
A_1	0.00	—	—
b	0.18	0.25	0.30
e	—	0.50	—
Lp	0.30	0.40	0.50
x	—	—	0.05
y	—	—	0.05
Z_D	—	0.75	—
Z_E	—	0.75	—
c_2	0.15	0.20	0.25
D_2	—	4.50	—
E_2	—	4.50	—

Figure 1.7 40-pin QFN

RA生态工作室

Revision History	RA4M1Group Datasheet

Rev.	Date	Summary
1.00	Oct 8, 2019	First release

Proprietary Notice

All text, graphics, photographs, trademarks, logos, artwork and computer code, collectively known as content, contained in this document is owned, controlled or licensed by or to Renesas, and is protected by trade dress, copyright, patent and trademark laws, and other intellectual property rights and unfair competition laws. Except as expressly provided herein, no part of this document or content may be copied, reproduced, republished, posted, publicly displayed, encoded, translated, transmitted or distributed in any other medium for publication or distribution or for any commercial enterprise, without prior written consent from Renesas.

Arm® and Cortex® are registered trademarks of Arm Limited. CoreSight™ is a trademark of Arm Limited.

CoreMark® is a registered trademark of the Embedded Microprocessor Benchmark Consortium.

Magic Packet™ is a trademark of Advanced Micro Devices, Inc.

SuperFlash® is a registered trademark of Silicon Storage Technology, Inc. in several countries including the United States and Japan.

Other brands and names mentioned in this document may be the trademarks or registered trademarks of their respective holders.

修订记录	RA4M1Group Datasheet

Rev.	Date	Summary
1.00	Oct 8, 2019	首次发布

专有通知

本文档中包含的所有文本、图形、照片、商标、徽标、艺术品和计算机代码（统称为内容）均归瑞萨电子所有、控制或许可，并受商业外观、版权、专利和商标法的保护，以及其他知识产权和不正当竞争法。除非在此明确规定，否则未经事先书面同意，不得将本文档或内容的任何部分复制、复制、再版、张贴、公开展示、编码、翻译、传输或分发到任何其他媒体中以供出版或分发或用于任何商业企业瑞萨电子的同意。Arm®和Cortex®是ArmLimited的注册商标。CoreSight 是ArmLimited的商标。

CoreMark®是嵌入式微处理器基准联盟的注册商标。

MagicPacket 是AdvancedMicroDevices Inc.的商标。

SuperFlash®是SiliconStorageTechnology Inc.在包括美国和日本在内的多个国家的注册商标。本文档中提及的其他品牌和名称可能是其各自所有者的商标或注册商标。

RA生态工作室

RA生态工作室

RA4M1 Group Datasheet

Publication Date: Rev.1.00 Oct 8, 2019

Published by: Renesas Electronics Corporation

RA4M1 Group Datasheet

Publication Date: Rev.1.00 Oct 8, 2019

Published by: 瑞萨电子公司

General Precautions

1. Precaution against Electrostatic Discharge (ESD)
   A strong electrical field, when exposed to a CMOS device, can cause destruction of the gate oxide and ultimately degrade the device operation. Steps must be taken to stop the generation of static electricity as much as possible, and quickly dissipate it when it occurs. Environmental control must be adequate. When it is dry, a humidifier should be used. This is recommended to avoid using insulators that can easily build up static electricity. Semiconductor devices must be stored and transported in an anti-static container, static shielding bag or conductive material. All test and measurement tools including work benches and floors must be grounded. The operator must also be grounded using a wrist strap. Semiconductor devices must not be touched with bare hands. Similar precautions must be taken for printed circuit boards with mounted semiconductor devices.

2. Processing at power-on
   The state of the product is undefined at the time when power is supplied. The states of internal circuits in the LSI are indeterminate and the states of register settings and pins are undefined at the time when power is supplied. In a finished product where the reset signal is applied to the external reset pin, the states of pins are not guaranteed from the time when power is supplied until the reset process is completed. In a similar way, the states of pins in a product that is reset by an on-chip power-on reset function are not guaranteed from the time when power is supplied until the power reaches the level at which resetting is specified.

3. Input of signal during power-off state
   Do not input signals or an I/O pull-up power supply while the device is powered off. The current injection that results from input of such a signal or I/O pull-up power supply may cause malfunction and the abnormal current that passes in the device at this time may cause degradation of internal elements. Follow the guideline for input signal during power-off state as described in your product documentation.

4. Handling of unused pins
   Handle unused pins in accordance with the directions given under handling of unused pins in the manual. The input pins of CMOS products are generally in the high-impedance state. In operation with an unused pin in the open-circuit state, extra electromagnetic noise is induced in the vicinity of the LSI, an associated shoot-through current flows internally, and malfunctions occur due to the false recognition of the pin state as an input signal become possible.

5. Clock signals
   After applying a reset, only release the reset line after the operating clock signal becomes stable. When switching the clock signal during program execution, wait until the target clock signal is stabilized. When the clock signal is generated with an external resonator or from an external oscillator during a reset, ensure that the reset line is only released after full stabilization of the clock signal. Additionally, when switching to a clock signal produced with an external resonator or by an external oscillator while program execution is in progress, wait until the target clock signal is stable.

6. Voltage application waveform at input pin
   Waveform distortion due to input noise or a reflected wave may cause malfunction. If the input of the CMOS device stays in the area between V_{IL} (Max.) and V_{IH} (Min.) due to noise, for example, the device may malfunction. Take care to prevent chattering noise from entering the device when the input level is fixed, and also in the transition period when the input level passes through the area between V_{IL} (Max.) and V_{IH} (Min.).

7. Prohibition of access to reserved addresses
   Access to reserved addresses is prohibited. The reserved addresses are provided for possible future expansion of functions. Do not access these addresses as the correct operation of the LSI is not guaranteed.

8. Differences between products
   Before changing from one product to another, for example to a product with a different part number, confirm that the change will not lead to problems. The characteristics of a microprocessing unit or microcontroller unit products in the same group but having a different part number might differ in terms of internal memory capacity, layout pattern, and other factors, which can affect the ranges of electrical characteristics, such as characteristic values, operating margins, immunity to noise, and amount of radiated noise. When changing to a product with a different part number, implement a system-evaluation test for the given product.

一般注意事项

1.防止静电放电(ESD)强电场暴露于CMOS器件时，会导致栅极氧化物的破坏，并最终导致

降级设备操作。必须采取措施，尽可能地阻止静电的产生，并在产生时迅速消散。环境控制必须充分。干燥时，应使用加湿器。建议避免使用容易产生静电的绝缘体。半导体器件必须在防静电容器、静电屏蔽袋或导电材料中储存和运输。所有测试和测量工具，包括工作台和地板都必须接地。操作员还必须使用腕带接地。不得赤手触摸半导体器件。对于安装有半导体器件的印刷电路板，必须采取类似的预防措施。

2.通电时的处理通电时产品的状态是不确定的。LSI内部电路的状态为

indeterminate并且在供电时寄存器设置和引脚的状态未定义。在将复位信号施加到外部复位管脚的成品中，从通电到复位过程完成，管脚的状态不能得到保证。同样，通过片内上电复位功能复位的产品，从通电到电源达到指定的复位电平，其引脚的状态也无法保证。

3.关机状态下的信号输入不要在设备关机状态下输入信号或IO上拉电源。输入此类信号或IO上拉电源导致的电流注入可能会导致故障，此时通过设备的异常电流可能会导致内部元件退化。遵循产品文档中所述的断电状态下输入信号指南。

4.未使用引脚的处理按照手册中未使用引脚处理中的说明处理未使用引脚。CMOS产品的输入引脚一般处于高阻状态。在未使用的引脚处于开路状态的情况下，在LSI附近会感应出额外的电磁噪声，相关的直通电流会在内部流动，并且由于将引脚状态错误识别为输入信号而发生故障成为可能。

5.时钟信号应用复位后，只有在工作时钟信号稳定后才释放复位线。在程序执行过程中切换时钟信号时，请等待目标时钟信号稳定。在复位期间使用外部谐振器或外部振荡器生成时钟信号时，请确保仅在时钟信号完全稳定后才释放复位线。此外，在程序执行过程中切换到由外部谐振器或外部振荡器产生的时钟信号时，请等待目标时钟信号稳定。

6.输入引脚的电压施加波形由于输入噪声或反射波导致的波形失真可能会导致故障。如果CMOS设备的输入

由于噪声等原因，会停留在VIL(Max.)和VIH(Min.)之间的区域内，例如，设备可能会发生故障。当输入电平固定时，以及输入电平通过VIL(Max.)和VIH(Min.)之间的区域时，请注意防止颤振噪声进入器件。

7.禁止访问保留地址
禁止访问保留地址。保留地址是为将来可能的功能扩展提供的。不要访问这些地址，因为不能保证LSI的正确操作。

8.产品之间的差异在从一种产品更改为另一种产品之前，例如更改为具有不同部件号的产品，请确认更改不会导致问题。同一组中的微处理单元或微控制器单元产品的特性可能会在内部存储器容量、布局图案和其他因素方面有所不同，这些因素会影响电气特性的范围，例如特性值、工作裕度、抗噪声能力和辐射噪声量。当更改为具有不同部件号的产品时，对给定产品实施系统评估测试。

RA生态工作室

Notice

1. Descriptions of circuits, software and other related information in this document are provided only to illustrate the operation of semiconductor products and application examples. You are fully responsible for the incorporation or any other use of the circuits, software, and information in the design of your product or system. Renesas Electronics disclaims any and all liability for any losses and damages incurred by you or third parties arising from the use of these circuits, software, or information.
2. Renesas Electronics hereby expressly disclaims any warranties against and liability for infringement or any other claims involving patents, copyrights, or other intellectual property rights of third parties, by or arising from the use of Renesas Electronics products or technical information described in this document, including but not limited to, the product data, drawings, charts, programs, algorithms, and application examples.
3. No license, express, implied or otherwise, is granted hereby under any patents, copyrights or other intellectual property rights of Renesas Electronics or others.
4. You shall not alter, modify, copy, or reverse engineer any Renesas Electronics product, whether in whole or in part. Renesas Electronics disclaims any and all liability for any losses or damages incurred by you or third parties arising from such alteration, modification, copying or reverse engineering.
5. Renesas Electronics products are classified according to the following two quality grades: "Standard" and "High Quality". The intended applications for each Renesas Electronics product depends on the product's quality grade, as indicated below.
   "Standard": Computers; office equipment; communications equipment; test and measurement equipment; audio and visual equipment; home electronic appliances; machine tools; personal electronic equipment; industrial robots; etc.
   "High Quality": Transportation equipment (automobiles, trains, ships, etc.); traffic control (traffic lights); large-scale communication equipment; key financial terminal systems; safety control equipment; etc.
   Unless expressly designated as a high reliability product or a product for harsh environments in a Renesas Electronics data sheet or other Renesas Electronics document, Renesas Electronics products are not intended or authorized for use in products or systems that may pose a direct threat to human life or bodily injury (artificial life support devices or systems; surgical implantations; etc.), or may cause serious property damage (space system; undersea repeaters; nuclear power control systems; aircraft control systems; key plant systems; military equipment; etc.). Renesas Electronics disclaims any and all liability for any damages or losses incurred by you or any third parties arising from the use of any Renesas Electronics product that is inconsistent with any Renesas Electronics data sheet, user's manual or other Renesas Electronics document.
6. When using Renesas Electronics products, refer to the latest product information (data sheets, user's manuals, application notes, "General Notes for Handling and Using Semiconductor Devices" in the reliability handbook, etc.), and ensure that usage conditions are within the ranges specified by Renesas Electronics with respect to maximum ratings, operating power supply voltage range, heat dissipation characteristics, installation, etc. Renesas Electronics disclaims any and all liability for any malfunctions, failure or accident arising out of the use of Renesas Electronics products outside of such specified ranges.
7. Although Renesas Electronics endeavors to improve the quality and reliability of Renesas Electronics products, semiconductor products have specific characteristics, such as the occurrence of failure at a certain rate and malfunctions under certain use conditions. Unless designated as a high reliability product or a product for harsh environments in a Renesas Electronics data sheet or other Renesas Electronics document, Renesas Electronics products are not subject to radiation resistance design. You are responsible for implementing safety measures to guard against the possibility of bodily injury, injury or damage caused by fire, and/or danger to the public in the event of a failure or malfunction of Renesas Electronics products, such as safety design for hardware and software, including but not limited to redundancy, fire control and malfunction prevention, appropriate treatment for aging degradation or any other appropriate measures. Because the evaluation of microcomputer software alone is very difficult and impractical, you are responsible for evaluating the safety of the final products or systems manufactured by you.
8. Please contact a Renesas Electronics sales office for details as to environmental matters such as the environmental compatibility of each Renesas Electronics product. You are responsible for carefully and sufficiently investigating applicable laws and regulations that regulate the inclusion or use of controlled substances, including without limitation, the EU RoHS Directive, and using Renesas Electronics products in compliance with all these applicable laws and regulations. Renesas Electronics disclaims any and all liability for damages or losses occurring as a result of your noncompliance with applicable laws and regulations.
9. Renesas Electronics products and technologies shall not be used for or incorporated into any products or systems whose manufacture, use, or sale is prohibited under any applicable domestic or foreign laws or regulations. You shall comply with any applicable export control laws and regulations promulgated and administered by the governments of any countries asserting jurisdiction over the parties or transactions.
10. It is the responsibility of the buyer or distributor of Renesas Electronics products, or any other party who distributes, disposes of, or otherwise sells or transfers the product to a third party, to notify such third party in advance of the contents and conditions set forth in this document.
11. This document shall not be reprinted, reproduced or duplicated in any form, in whole or in part, without prior written consent of Renesas Electronics.
12. Please contact a Renesas Electronics sales office if you have any questions regarding the information contained in this document or Renesas Electronics products.

(Note 1) "Renesas Electronics" as used in this document means Renesas Electronics Corporation and also includes its directly or indirectly controlled subsidiaries.
(Note 2) "Renesas Electronics product(s)" means any product developed or manufactured by or for Renesas Electronics.

(Rev.4.0-1 November 2017)

SALES OFFICES Renesas Electronics Corporation http://www.renesas.com

Refer to "http://www.renesas.com/" for the latest and detailed information.

Renesas Electronics Corporation
TOYOSU FORESIA, 3-2-24 Toyosu, Koto-ku, Tokyo 135-0061, Japan

Renesas Electronics America Inc.
1001 Murphy Ranch Road, Milpitas, CA 95035, U.S.A.
Tel: +1-408-432-8888, Fax: +1-408-434-5351

Renesas Electronics Canada Limited
9251 Yonge Street, Suite 8309 Richmond Hill, Ontario Canada L4C 9T3
Tel: +1-905-237-2004

Renesas Electronics Europe GmbH
Arcadiastrasse 10, 40472 Düsseldorf, Germany
Tel: +49-211-6503-0, Fax: +49-211-6503-1327

Renesas Electronics (China) Co., Ltd.
Room 101-T01, Floor 1, Building 7, Yard No. 7, 8th Street, Shangdi, Haidian District, Beijing 100085, China
Tel: +86-10-8235-1155, Fax: +86-10-8235-7679

Renesas Electronics (Shanghai) Co., Ltd.
Unit 301, Tower A, Central Towers, 555 Langao Road, Putuo District, Shanghai 200333, China
Tel: +86-21-2226-0888, Fax: +86-21-2226-0999

Renesas Electronics Hong Kong Limited
Unit 1601-1611, 16/F., Tower 2, Grand Century Place, 193 Prince Edward Road West, Mongkok, Kowloon, Hong Kong
Tel: +852-2265-6688, Fax: +852 2886-9022

Renesas Electronics Taiwan Co., Ltd.
13F, No. 363, Fu Shing North Road, Taipei 10543, Taiwan
Tel: +886-2-8175-9600, Fax: +886 2-8175-9670

Renesas Electronics Singapore Pte. Ltd.
80 Bendemeer Road, Unit #06-02 Hyflux Innovation Centre, Singapore 339949
Tel: +65-6213-0200, Fax: +65-6213-0300

Renesas Electronics Malaysia Sdn.Bhd.
Unit No 3A-1 Level 3A Tower 8 UOA Business Park, No 1 Jalan Pengaturcara U1/51A, Seksyen U1, 40150 Shah Alam, Selangor, Malaysia
Tel: +60-3-5022-1288, Fax: +60-3-5022-1290

Renesas Electronics India Pvt. Ltd.
No.777C, 100 Feet Road, HAL 2nd Stage, Indiranagar, Bangalore 560 038, India
Tel: +91-80-67208700

Renesas Electronics Korea Co., Ltd.
17F, KAMCO Yangjae Tower, 262, Gangnam-daero, Gangnam-gu, Seoul, 06265 Korea
Tel: +82-2-558-3737, Fax: +82-2-558-5338

© 2019 Renesas Electronics Corporation. All rights reserved.
Colophon 8.0

Notice

1.本文档中的电路、软件和其他相关信息的描述仅用于说明半导体产品的操作和应用示例。您全权负责
在您的产品或系统设计中加入或以任何其他方式使用电路、软件和信息。瑞萨电子对由以下人员造成的任何损失和损害不承担任何责任
您或第三方因使用这些电路、软件或信息而引起的。
2.瑞萨电子在此明确声明不对侵权或涉及第三方专利、版权或其他知识产权的任何其他索赔提供任何保证和责任，或
因使用本文档中描述的瑞萨电子产品或技术信息而引起的，包括但不限于产品数据、图纸、图表、程序、算法和应用程序
examples.
3.根据瑞萨电子或其他方的任何专利、版权或其他知识产权，特此未授予任何明示、暗示或其他许可。
4.您不得更改、修改、复制或反向工程任何瑞萨电子产品，无论是全部还是部分。瑞萨电子对由以下人员造成的任何损失或损害不承担任何责任
您或第三方因此类更改、修改、复制或逆向工程而引起的。
5.瑞萨电子产品根据以下两个质量等级进行分类："标准"和"高质量"。每个瑞萨电子产品的预期应用取决于
产品的质量等级，如下所示。
"Standard": 电脑;办公用品;通讯设备；测试和测量设备；视听设备；家用电器；机械工具;个人电子
设备;工业机器人；等等
"高品质"：运输设备（汽车、火车、轮船等）；交通管制（红绿灯）；大型通讯设备；关键金融终端系统；安全控制设备；等等
除非在瑞萨电子数据表或其他瑞萨电子文档中明确指定为高可靠性产品或适用于恶劣环境的产品，否则瑞萨电子产品是
不打算或授权用于可能对人类生命或身体伤害构成直接威胁的产品或系统（人工生命支持设备或系统；外科植入物等），或可能导致
严重的财产损失（空间系统；海底中继器；核电控制系统；飞机控制系统；关键工厂系统；军事装备等）。瑞萨电子否认任何和所有
您或任何第三方因使用与任何瑞萨电子数据表、用户手册或
其他瑞萨电子文件。
6.使用瑞萨电子产品时，请参阅最新的产品信息（数据表、用户手册、应用说明、"处理和使用半导体器件的一般说明"）
可靠性手册等），并确保使用条件在瑞萨电子规定的最大额定值、工作电源电压范围、散热范围内
瑞萨电子不承担因在上述规定之外使用瑞萨电子产品而引起的任何故障、故障或事故的任何和所有责任
ranges.
7.尽管瑞萨电子努力提高瑞萨电子产品的质量和可靠性，但半导体产品具有特定的特性，例如在运行时会发生故障。
特定使用条件下的特定速率和故障。除非在瑞萨电子数据表或其他瑞萨电子中指定为高可靠性产品或适用于恶劣环境的产品
电子文档，瑞萨电子产品不受抗辐射设计。您有责任实施安全措施以防范人身伤害、受伤的可能性
瑞萨电子产品出现故障或故障，例如硬件和软件的安全设计，包括但不限于：
冗余、火灾控制和故障预防、老化退化的适当处理或任何其他适当的措施。因为单单评估微机软件是很困难的
并且不切实际，您有责任评估您制造的最终产品或系统的安全性。
8.请联系瑞萨电子销售办事处了解有关环境问题的详细信息，例如每个瑞萨电子产品的环境兼容性。您有责任认真负责
充分调查规范受控物质的包含或使用的适用法律和法规，包括但不限于欧盟RoHS指令，以及使用瑞萨电子
产品符合所有这些适用的法律和法规。瑞萨电子不承担因您不遵守适用的
法律法规。
9.瑞萨电子的产品和技术不得用于或整合到任何适用的国内或国外法律禁止制造、使用或销售的产品或系统中
或法规。您应遵守主张对当事人具有管辖权的任何国家/地区的政府颁布和管理的任何适用的出口管制法律和法规，或
transactions.
10.瑞萨电子产品的买方或分销商，或任何其他向第三方分销、处置或以其他方式出售或转让产品的第三方有责任通知此类第三方
在本文件中规定的内容和条件之前的一方。
11.未经瑞萨电子事先书面同意，不得以任何形式全部或部分翻印、复制或复制本文档。
12.如果您对本文档中包含的信息或瑞萨电子产品有任何疑问，请联系瑞萨电子销售办事处。
（注1）本文件中使用的"瑞萨电子"是指瑞萨电子公司，还包括其直接或间接控制的子公司。
（注2）"瑞萨电子产品"是指由瑞萨电子开发或制造或为瑞萨电子制造的任何产品

(Rev.4.0-1 November 2017)

销售办事处 Renesas Electronics Corporation http://www.renesas.com

有关最新和详细信息，请参阅"http：www.renesas.com"。

瑞萨电子株式会社TOYOSUFORESIA 3-2-24Toyosu Koto-ku Tokyo135
-0061 Japan
瑞萨电子美国公司1001MurphyRanchRoad Milpitas CA
95035 U.S.A.电话：+1-408-432-8888，传真：+1-40
8-434-5351
瑞萨电子加拿大有限公司9251YongeStreet Suite8309RichmondHill Ont
arioCanadaL4C9T3电话：+1-905-237-2004

瑞萨电子欧洲有限公司
Arcadiastrasse 10, 40472 Düsseldorf, Germany
Tel: +49-211-6503-0, Fax: +49-211-6503-1327
瑞萨电子（中国）有限公司
中国北京市海淀区上地8街7号院7号楼1层101-T01室100085
Tel: +86-10-8235-1155, Fax: +86-10-8235-7679
瑞萨电子（上海）有限公司
中国上海市普陀区岚皋路555号中央大厦A座301单元200333
Tel: +86-21-2226-0888, Fax: +86-21-2226-0999
瑞萨电子香港有限公司香港九龙旺角太子道西193号世纪广场2座16楼1601-1611室

Tel: +852-2265-6688, Fax: +852 2886-9022
RenesasElectronicsTaiwanCo. Ltd.13F No.363 FuShingNort
hRoad Taipei10543 Taiwan电话：+886-2-8175-9600，
传真：+8862-8175-9670
瑞萨电子新加坡私人有限公司Ltd.80BendemeerRoad Unit#06-02HyfluxInnovat
ionCentre Singapore339949电话：+65-6213-0200，传真：+65-6213-0300
RenesasElectronicsMalaysiaSdn.Bhd.

UnitNo3A-1Level3ATower8UOABusinessPark No1JalanPengaturcaraU151A SeksyenU1 40150ShahAlam Selangor Malaysia
Tel: +60-3-5022-1288, Fax: +60-3-5022-1290
瑞萨电子印度列兵。有限公司
No.777C 100FeetRoad HAL2ndStage Indiranagar Bangalore560038 India
Tel: +91-80-67208700
RenesasElectronicsKoreaCo. Ltd.17F KAMCOYangjaeTower 262 Gangnam-daero Gangn
am-gu Seoul 06265KoreaTel:+82-2-558-3737 Fax:+82-2-558-5338

©2019瑞萨电子公司。版权所有。
Colophon 8.0

RA生态工作室

RA4M1 Group

Renesas Electronics Corporation

R01DS0355EJ0100

封底

RA4M1 Group

Renesas Electronics Corporation

R01DS0355EJ0100

RA生态工作室