Leading-performance 100 MHz Arm Cortex-M33 core, up to 512 KB code flash memory with background operation, 8 KB Data flash memory, and 128 KB SRAM with Parity/ECC. High-integration with USB 2.0 Full-Speed, SDHI, Quad SPI, and advanced analog. Integrated Secure Crypto Engine with cryptography accelerators, key management support, tamper detection and power analysis resistance in concert with Arm TrustZone for integrated secure element functionality.

Features

■ Arm® Cortex®-M33 Core

- Armv8-M architecture with the main extension
- Maximum operating frequency: 100 MHz
- Arm Memory Protection Unit (Arm MPU)
  - Protected Memory System Architecture (PMSAv8)
  - Secure MPU (MPU_S): 8 regions
  - Non-secure MPU (MPU_NS): 8 regions
- SysTick timer
  - Embeds two Systick timers: Secure and Non-secure instance
  - Driven by LOCO or system clock
- CoreSight™ ETM-M33

■ Memory

- Up to 512-KB code flash memory
- 8-KB data flash memory (100,000 program/erase (P/E) cycles)
- 128-KB SRAM

■ Connectivity

- Serial Communications Interface (SCI) × 6
  - Asynchronous interfaces
  - 8-bit clock synchronous interface
  - Smart card interface
  - Simple IIC
  - Simple SPI
  - Manchester coding (SCI3, SCI4)
- I^2C bus interface (IIC) × 2
- Serial Peripheral Interface (SPI)
- Quad Serial Peripheral Interface (QSPI)
- USB 2.0 Full-Speed Module (USBFS)
- Control Area Network module (CAN)
- SD/MMC Host Interface (SDHI)
- Serial Sound Interface Enhanced (SSIE)

■ Analog

- 12-bit A/D Converter (ADC12)
- 12-bit D/A Converter (DAC12) × 2
- Temperature Sensor (TSN)

■ Timers

- General PWM Timer 32-bit (GPT32) × 4
- General PWM Timer 16-bit (GPT16) × 4
- Low Power Asynchronous General Purpose Timer (AGT) × 6

■ Security and Encryption

- Secure Crypto Engine 9
  - Symmetric algorithms: AES
  - Asymmetric algorithms: RSA, ECC, and DSA
  - Hash-value generation: SHA224, SHA256, GHASH
  - 128-bit unique ID
- Arm® TrustZone®
  - Up to three regions for the code flash
  - Up to two regions for the data flash
  - Up to three regions for the SRAM
  - Individual secure or non-secure security attribution for each peripheral
- Device lifecyle management
- Pin function
  - Up to three tamper pins
  - Secure pin multiplexing

■ System and Power Management

- Low power modes
- Battery backup function (VBATT)
- Realtime Clock (RTC) with calendar and VBATT support
- Event Link Controller (ELC)
- Data Transfer Controller (DTC)
- DMA Controller (DMAC) × 8
- Power-on reset
- Low Voltage Detection (LVD) with voltage settings
- Watchdog Timer (WDT)
- Independent Watchdog Timer (IWDT)

■ Human Machine Interface (HMI)

- Capacitive Touch Sensing Unit (CTSU)

■ Multiple Clock Sources

- Main clock oscillator (MOSC) (8 to 24 MHz)
- Sub-clock oscillator (SOSC) (32.768 kHz)
- High-speed on-chip oscillator (HOCO) (16/18/20 MHz)
- Middle-speed on-chip oscillator (MOCO) (8 MHz)
- Low-speed on-chip oscillator (LOCO) (32.768 kHz)
- IWDT-dedicated on-chip oscillator (15 kHz)
- Clock trim function for HOCO/MOCO/LOCO
- PLL/PLL2
- Clock out support

■ General-Purpose I/O Ports

- 5-V tolerance, open drain, input pull-up, switchable driving ability

■ Operating Voltage

- VCC: 2.7 to 3.6 V

■ Operating Temperature and Packages

- Ta = -40°C to +105°C
  - 100-pin LQFP (14 mm × 14 mm, 0.5 mm pitch)
  - 64-pin LQFP (10 mm × 10 mm, 0.5 mm pitch)
  - 48-pin LQFP (7 mm × 7 mm, 0.5 mm pitch)
  - 48-pin QFN (7 mm × 7 mm, 0.5 mm pitch)

RA4M2 Group
Renesas Microcontrollers
R01DS0367EJ0110
Rev.1.10
Jan 27, 2021

性能领先的100MHzArmCortex-M33内核、高达512KB的后台运行代码闪存、8KB数据闪存和带奇偶校验ECC的128KBSRAM。与USB2.0全速、SDHI、QuadSPI和高级模拟的高度集成。具有加密加速器的集成安全加密引擎、密钥管理支持、篡改检测和电源分析抗性与ArmTrustZone相结合，可实现集成安全元件功能。

Features

■Arm®Cortex®-M33内核

●带有主扩展的Armv8-M架构●最大工作频率：100MHz●Arm内存保护单元（ArmMPU）

受保护的内存系统架构(PMSAv8) 安全MPU(MPU_S)：8个区域 非安全MPU(MPU_NS)：8个区域●SysTick计时器

嵌入两个Systick计时器：安全和非安全实例 由LOCO或系统时钟驱动●CoreSight ETM-M33

■ Memory

●高达512-KB代码闪存●8-KB数据闪存（100 000次程序擦除(PE)周期）●128-KBSRAM

■ Connectivity

●串行通信接口(SCI)×6-异步接口-8位时钟同步接口-智能卡接口-简单IIC-简单SPI-曼彻斯特编码(SCI3 SCI4)●I2C总线接口(IIC)×2●串行外设接口(SPI)●四路串行外设接口(QSPI)●USB2.0全速模块(USBFS)●控制局域网模块(CAN)●SDMMC主机接口(SDHI)●增强型串行声音接口(SSIE)

■ Analog

●12位模数转换器(ADC12)●12位模数转换器(DAC12)×2●温度传感器(TSN)

■ Timers

●通用PWM定时器32位(GPT32)×4●通用PWM定时器16位(GPT16)×4●低功耗异步通用定时器(AGT)×6

■安全和加密●安全加密引擎9

对称算法：AES 非对称算法：RSA、ECC和DSA 哈希值生成：SHA224、SHA256、GHASH 128位唯一ID●Arm®TrustZone®

代码闪存最多三个区域 数据闪存最多两个区域 SRAM最多三个区域 每个外围设备的单独安全或非安全安全属性●设备生命周期管理●引脚功能

最多三个防篡改引脚
安全引脚复用

■系统和电源管理●低功耗模式●电池备份功能(VBATT)●支持日历和VBATT的实时时钟(RTC)●事件链接控制器(ELC)●数据传输控制器(DTC)●DMA控制器(DMAC)×8●上电复位●具有电压设置的低电压检测(LVD)●看门狗定时器(WDT)

●独立看门狗定时器（IWDT）

■人机界面(HMI)●电容式触摸感应单元(CTSU)

■多个时钟源

●主时钟振荡器（MOSC）（8至24MHz）●副时钟振荡器（SOSC）（32.768kHz）●高速片上振荡器（HOCO）（161820MHz）●中速片上振荡器(MOCO)(8MHz)●低速片上振荡器(LOCO)(32.768kHz)●IWDT专用片上振荡器(15kHz)●HOCOMOCOLOCO的时钟微调功能●PLLPLL2●时钟输出支持

■ General-Purpose I/O Ports

●5V容差、开漏、输入上拉、可切换驱动能力

■工作电压●VCC：2.7至3.6V

■工作温度和封装●Ta=-40℃to+105℃

- 100-pin LQFP (14 mm × 14 mm, 0.5 mm pitch)
- 64-pin LQFP (10 mm × 10 mm, 0.5 mm pitch)
- 48-pin LQFP (7 mm × 7 mm, 0.5 mm pitch)
- 48-pin QFN (7 mm × 7 mm, 0.5 mm pitch)

RA生态工作室

1. Overview

The MCU integrates multiple series of software- and pin-compatible Arm®-based 32-bit cores that share a common set of Renesas peripherals to facilitate design scalability and efficient platform-based product development.

The MCU in this series incorporates a high-performance Arm Cortex®-M33 core running up to 100 MHz with the following features:

- Up to 512 KB code flash memory
- 128 KB SRAM
- Quad Serial Peripheral Interface (QSPI)
- USBFS, SD/MMC Host Interface
- Capacitive Touch Sensing Unit (CTSU)
- Analog peripherals
- Security and safety features

1.1 Function Outline

Table 1.1 Arm core

Feature	Functional description
Arm Cortex-M33 core	• Maximum operating frequency: up to 100 MHz • Arm Cortex-M33 core: – Armv8-M architecture with security extension – Revision: r0p4-00rel0 • Arm Memory Protection Unit (Arm MPU) – Protected Memory System Architecture (PMSAv8) – Secure MPU (MPU_S): 8 regions – Non-secure MPU (MPU_NS): 8 regions • SysTick timer – Embeds two Systick timers: Secure and Non-secure instance – Driven by SysTick timer clock (SYSTICCLK) or system clock (ICLK) • CoreSight™ ETM-M33

Table 1.2 Memory

Feature	Functional description
Code flash memory	Maximum 512 KB of code flash memory.
Data flash memory	8 KB of data flash memory.
Option-setting memory	The option-setting memory determines the state of the MCU after a reset.
SRAM	On-chip high-speed SRAM with either parity bit or Error Correction Code (ECC).

Table 1.3 System (1 of 2)

	Functional description
Operating modes	Two operating modes: • Single-chip mode • SCI/USB boot mode
Resets	The MCU provides 13 resets.
Low Voltage Detection (LVD)	The Low Voltage Detection (LVD) module monitors the voltage level input to the VCC pin. The detection level can be selected by register settings. The LVD module consists of three separate voltage level detectors (LVD0, LVD1, LVD2). LVD0, LVD1, and LVD2 measure the voltage level input to the VCC pin. LVD registers allow your application to configure detection of VCC changes at various voltage thresholds.

1. Overview

MCU集成了多个系列的软件和基于Arm®引脚兼容的32位内核，这些内核共享一组通用的瑞萨外围设备可促进设计可扩展性和高效的基于平台的产品开发。

该系列中的MCU包含一个运行频率高达100MHz的高性能ArmCortex®-M33内核，具有以下特性：

●高达512KB的代码闪存
- 128 KB SRAM
●四路串行外设接口(QSPI)
●USBFS、SDMMC主机接口
●电容式触控感应单元(CTSU)
●模拟外设
●安全和安全功能

1.1 功能概要

Table 1.1 臂芯

Feature	功能说明
ArmCortex-M33内核	• 最大工作频率：高达100MHz • Arm Cortex-M33 core: – 带有安全扩展的Armv8-M架构 – Revision: r0p4-00rel0 • Arm内存保护单元（ArmMPU） – 受保护的内存系统架构(PMSAv8) – 安全MPU(MPU_S)：8个区域 – Non-secure MPU (MPU_NS): 8 regions • SysTick timer – 嵌入两个Systick计时器：安全和非安全实例 – 由SysTick定时器时钟(SYSTICCLK)或系统时钟(ICLK)驱动 • CoreSight™ ETM-M33

Table 1.2 Memory

Feature	功能说明
代码闪存	最大512KB的代码闪存。
数据闪存	8KB数据闪存。
Option-setting memory	选项设置存储器确定复位后MCU的状态。
SRAM	具有奇偶校验位或纠错码(ECC)的片上高速SRAM。

Table 1.3 系统(1of2)

	功能说明
操作模式	两种操作模式：● • SCIUSB启动模式
Resets	MCU提供13次复位。
低电压检测(LVD)	低电压检测(LVD)模块监控输入到VCC引脚的电压电平。检测等级可以通过寄存器设置来选择。LVD模块由三个独立的电压电平检测器（LVD0、LVD1、LVD2）组成。LVD0、LVD1和LVD2测量输入到VCC引脚的电压电平。LVD寄存器允许您的应用程序配置在各种电压阈值下检测VCC变化。

RA生态工作室

Table 1.3 System (2 of 2)

	Functional description
Clocks	● Main clock oscillator (MOSC) ● Sub-clock oscillator (SOSC) ● High-speed on-chip oscillator (HOCO) ● Middle-speed on-chip oscillator (MOCO) ● Low-speed on-chip oscillator (LOCO) ● IWDT-dedicated on-chip oscillator ● PLL/PLL2 ● Clock out support
Clock Frequency Accuracy Measurement Circuit (CAC)	The Clock Frequency Accuracy Measurement Circuit (CAC) counts pulses of the clock to be measured (measurement target clock) within the time generated by the clock selected as the measurement reference (measurement reference clock), and determines the accuracy depending on whether the number of pulses is within the allowable range.When measurement is complete or the number of pulses within the time generated by the measurement reference clock is not within the allowable range, an interrupt request is generated.
Interrupt Controller Unit (ICU)	The Interrupt Controller Unit (ICU) controls which event signals are linked to the Nested Vector Interrupt Controller (NVIC), the DMA Controller (DMAC), and the Data Transfer Controller (DTC) modules. The ICU also controls non-maskable interrupts.
Low power modes	Power consumption can be reduced in multiple ways, including setting clock dividers, stopping modules, selecting power control mode in normal operation, and transitioning to low power modes.
Battery backup function	A battery backup function is provided for partial powering by a battery. The battery-powered area includes the RTC, SOSC, backup memory, and switch between VCC and VBATT.
Register write protection	The register write protection function protects important registers from being overwritten due to software errors. The registers to be protected are set with the Protect Register (PRCR).
Memory Protection Unit (MPU)	The MCU has one Memory Protection Unit (MPU).

Table 1.4 Event link

Feature	Functional description
Event Link Controller (ELC)	The Event Link Controller (ELC) uses the event requests generated by various peripheral modules as source signals to connect them to different modules, allowing direct link between the modules without CPU intervention.

Table 1.5 Direct memory access

Feature	Functional description
Data Transfer Controller (DTC)	A Data Transfer Controller (DTC) module is provided for transferring data when activated by an interrupt request.
DMA Controller (DMAC)	The MCU includes an 8-channel direct memory access controller (DMAC) that can transfer data without intervention from the CPU. When a DMA transfer request is generated, the DMAC transfers data stored at the transfer source address to the transfer destination address.

Table 1.6 External bus interface

Feature	Functional description
External buses	● QSPI area (EQBIU): Connected to the QSPI (external device interface)

Table 1.7 Timers (1 of 2)

Feature	Functional description
General PWM Timer (GPT)	The General PWM Timer (GPT) is a 32-bit timer with GPT32 × 4 channels and a 16-bit timer with GPT16 × 4 channels. PWM waveforms can be generated by controlling the up-counter, down-counter, or the up- and down-counter. In addition, PWM waveforms can be generated for controlling brushless DC motors. The GPT can also be used as a general-purpose timer.
Port Output Enable for GPT (POEG)	The Port Output Enable (POEG) function can place the General PWM Timer (GPT) output pins in the output disable state

Table 1.3 系统(2之2)

	功能说明
Clocks	● 主时钟振荡器(MOSC) ● Sub-clock oscillator (SOSC) ● High-speed on-chip oscillator (HOCO) ● Middle-speed on-chip oscillator (MOCO) ● Low-speed on-chip oscillator (LOCO) ● IWDT-dedicated on-chip oscillator ● PLL/PLL2 ● 打卡支持
时钟频率精度测量电路(CAC)	时钟频率精度测量电路(CAC)在被选为测量基准的时钟（测量基准时钟）产生的时间内对要测量的时钟（测量目标时钟）的脉冲进行计数，并根据脉冲数在允许范围内。当测量完成或测量参考时钟产生的时间内的脉冲数不在允许范围内时，将产生中断请求。
中断控制器单元(ICU)	中断控制器单元(ICU)控制哪些事件信号链接到嵌套向量 中断控制器(NVIC)、DMA控制器(DMAC)和数据传输控制器(DTC)模块。ICU还控制不可屏蔽的中断。
低功耗模式	可以通过多种方式降低功耗，包括设置时钟分频器、停止模块、在正常操作中选择电源控制模式以及转换到低功耗模式。
电池备份功能	提供电池备份功能，由电池部分供电。电池供电区域包括RTC、SOSC、备份存储器以及VCC和VBATT之间的切换。
寄存器写保护	寄存器写保护功能可保护重要寄存器不因软件错误而被覆盖。要保护的寄存器由保护寄存器(PRCR)设置。
内存保护单元(MPU)	MCU有一个内存保护单元(MPU)。

Table 1.4 活动链接

Feature	功能说明
事件链接控制器(ELC)	EventLinkController(ELC)使用各种外围模块产生的事件请求作为源信号，将它们连接到不同的模块，允许模块之间直接链接，无需CPU干预。

Table 1.5 直接内存访问

Feature	功能说明
数据传输控制器(DTC)	数据传输控制器(DTC)模块用于在被中断请求激活时传输数据。
DMA Controller (DMAC)	MCU包括一个8通道直接内存访问控制器(DMAC)，无需CPU干预即可传输数据。当产生DMA传输请求时，DMAC将存储在传输源地址的数据传输到传输目标地址。

Table 1.6 外部总线接口

Feature	功能说明
外部总线	● QSPI区（EQBIU）：连接到QSPI（外部设备接口）

Table 1.7 计时器(1of2)

Feature	功能说明
通用PWM定时器(GPT)	通用PWM定时器(GPT)是一个具有GPT32×4通道的32位定时器和一个具有GPT16×4通道。PWM波形可以通过控制加计数器、减计数器或加减计数器来产生。此外，可以生成PWM波形来控制无刷直流电机。GPT也可以用作通用定时器。
GPT(POEG)的端口输出使能	端口输出使能(POEG)功能可以将通用PWM定时器(GPT)输出引脚置于输出禁用状态

RA生态工作室

Table 1.7 Timers (2 of 2)

Feature	Functional description
Low power Asynchronous General Purpose Timer (AGT)	The low power Asynchronous General Purpose Timer (AGT) is a 16-bit timer that can be used for pulse output, external pulse width or period measurement, and counting external events. This timer consists of a reload register and a down counter. The reload register and the down counter are allocated to the same address, and can be accessed with the AGT register.
Realtime Clock (RTC)	The realtime clock (RTC) has two counting modes, calendar count mode and binary count mode, that are used by switching register settings. For calendar count mode, the RTC has a 100-year calendar from 2000 to 2099 and automatically adjusts dates for leap years. For binary count mode, the RTC counts seconds and retains the information as a serial value. Binary count mode can be used for calendars other than the Gregorian (Western) calendar.
Watchdog Timer (WDT)	The Watchdog Timer (WDT) is a 14-bit down counter that can be used to reset the MCU when the counter underflows because the system has run out of control and is unable to refresh the WDT. In addition, the WDT can be used to generate a non-maskable interrupt or an underflow interrupt.
Independent Watchdog Timer (IWDT)	The Independent Watchdog Timer (IWDT) consists of a 14-bit down counter that must be serviced periodically to prevent counter underflow. The IWDT provides functionality to reset the MCU or to generate a non-maskable interrupt or an underflow interrupt. Because the timer operates with an independent, dedicated clock source, it is particularly useful in returning the MCU to a known state as a fail-safe mechanism when the system runs out of control. The IWDT can be triggered automatically by a reset, underflow, refresh error, or a refresh of the count value in the registers.

Table 1.8 Communication interfaces (1 of 2)

Feature	Functional description
Serial Communications Interface (SCI)	The Serial Communications Interface (SCI) × 6 channels have asynchronous and synchronous serial interfaces: ● Asynchronous interfaces (UART and Asynchronous Communications Interface Adapter (ACIA)) ● 8-bit clock synchronous interface ● Simple IIC (master-only) ● Simple SPI ● Smart card interface ● Manchester interface ● Extended Serial interface The smart card interface complies with the ISO/IEC 7816-3 standard for electronic signals and transmission protocol. SCIn (n = 0, 3, 4, 9) has FIFO buffers to enable continuous and full-duplex communication, and the The data transfer speed can be configured independently using an on-chip baud rate generator.
I^2C bus interface (IIC)	The I^2C bus interface (IIC) has 2 channels. The IIC module conforms with and provides a subset of the NXP I^2C (Inter-Integrated Circuit) bus interface functions.
Serial Peripheral Interface (SPI)	The Serial Peripheral Interface (SPI) provides high-speed full-duplex synchronous serial communications with multiple processors and peripheral devices.
Control Area Network (CAN)	The Controller Area Network (CAN) module uses a message-based protocol to receive and transmit data between multiple slaves and masters in electromagnetically noisy applications. The module complies with the ISO 11898-1 (CAN 2.0A/CAN 2.0B) standard and supports up to 32 mailboxes, which can be configured for transmission or reception in normal mailbox and FIFO modes. Both standard (11-bit) and extended (29-bit) messaging formats are supported. The CAN module requires an additional external CAN transceiver.
USB 2.0 Full-Speed module (USBFS)	The USB 2.0 Full-Speed module (USBFS) can operate as a host controller or device controller. The module supports full-speed and low-speed (host controller only) transfer as defined in Universal Serial Bus Specification 2.0. The module has an internal USB transceiver and supports all of the transfer types defined in Universal Serial Bus Specification 2.0. The USB has buffer memory for data transfer, providing a maximum of 10 pipes. Pipes 1 to 9 can be assigned any endpoint number based on the peripheral devices used for communication or based on your system.
Quad Serial Peripheral Interface (QSPI)	The Quad Serial Peripheral Interface (QSPI) is a memory controller for connecting a serial ROM (nonvolatile memory such as a serial flash memory, serial EEPROM, or serial FeRAM) that has an SPI-compatible interface.

Table 1.7 计时器（2个中的2个）

Feature	功能说明
低功耗异步通用 目的定时器(AGT)	低功耗异步通用定时器(AGT)是一个16位定时器，可用于脉冲输出、外部脉冲宽度或周期测量以及外部事件计数。该定时器由一个重载寄存器和一个递减计数器组成。重载寄存器和递减计数器分配到同一个地址，可以通过AGT寄存器访问。
实时时钟(RTC)	实时时钟(RTC)有两种计数模式，日历计数模式和二进制计数模式，通过切换寄存器设置使用。对于日历计数模式，RTC有一个从2000年到2099年的100年日历，并自动调整闰年的日期。对于二进制计数模式，RTC会计算秒数并将信息保留为序列值。二进制计数模式可用于公历（西方）以外的日历。
看门狗定时器(WDT)	看门狗定时器(WDT)是一个14位递减计数器，可用于在计数器下溢时复位MCU，因为系统已失控且无法刷新WDT。此外，WDT可用于产生不可屏蔽中断或下溢中断。
独立看门狗定时器(IWDT)	独立看门狗定时器(IWDT)包含一个14位递减计数器，必须定期对其进行服务以防止计数器下溢。IWDT提供复位MCU或生成不可屏蔽中断或下溢中断的功能。由于定时器使用独立的专用时钟源运行，因此当系统失控时，它在将MCU作为故障安全机制返回到已知状态时特别有用。IWDT可以通过复位、下溢、刷新错误或寄存器中的计数值的刷新来自动触发。

Table 1.8 通信接口（2个中的1个）

Feature	功能说明
串行通信接口(SCI)	串行通信接口(SCI)×6通道具有异步和同步串行接口：● 异步接口（UART和异步通信接口适配器(ACIA)） ● 8位时钟同步接口 ● Simple IIC (master-only) ● 简单的SPI ● 智能卡接口 ● 曼彻斯特界面 ● 扩展串行接口 智能卡接口符合ISOIEC7816-3电子信号和传输协议标准。SCIn(n=0 3 4 9)具有FIFO缓冲区以实现连续和全双工通信，并且可以使用片上波特率发生器独立配置数据传输速度。
I2C总线接口(IIC)	I2C总线接口(IIC)有2个通道。IIC模块符合并提供NXPI2C（内部集成电路）总线接口功能的子集。
串行外设接口(SPI)	串行外围接口(SPI)提供与多个处理器和外围设备的高速全双工同步串行通信。
控制区域网络(CAN)	控制器局域网(CAN)模块使用基于消息的协议在电磁噪声应用中的多个从机和主机之间接收和传输数据。该模块符合ISO11898-1(CAN2.0ACAN2.0B)标准，最多支持32个邮箱，可配置为普通邮箱和FIFO模式下的发送或接收。支持标准（11位）和扩展（29位）消息格式。CAN模块需要额外的外部CAN收发器。
USB2.0全速模块(USBFS)	USB2.0全速模块(USBFS)可以作为主机控制器或设备控制器运行。 该模块支持全速和低速（仅限主机控制器）传输，如 通用串行总线规范2.0。该模块有一个内部USB收发器，支持通用串行总线规范2.0中定义的所有传输类型。USB具有用于数据传输的缓冲存储器，最多可提供10个管道。可以根据用于通信的外围设备或根据您的系统为管道1到9分配任何端点编号。
四路串行外设接口(QSPI)	QuadSerialPeripheralInterface(QSPI)是一种存储器控制器，用于连接具有SPI兼容接口的串行ROM（非易失性存储器，例如串行闪存、串行EEPROM或串行FeRAM）。

RA生态工作室

Table 1.8 Communication interfaces (2 of 2)

Feature	Functional description
Serial Sound Interface Enhanced (SSIE)	The Serial Sound Interface Enhanced (SSIE) peripheral provides functionality to interface with digital audio devices for transmitting I^2S/Monaural/TDM audio data over a serial bus. The SSIE supports an audio clock frequency of up to 50 MHz, and can be operated as a slave or master receiver, transmitter, or transceiver to suit various applications. The SSIE includes 32-stage FIFO buffers in the receiver and transmitter, and supports interrupts and DMA-driven data reception and transmission.
SD/MMC Host Interface (SDHI)	The SDHI and MultiMediaCard (MMC) interface module provides the functionality required to connect a variety of external memory cards to the MCU. The SDHI supports both 1- and 4-bit buses for connecting memory cards that support SD, SDHC, and SDXC formats. When developing host devices that are compliant with the SD Specifications, you must comply with the SD Host/Ancillary Product License Agreement (SD HALA). The MMC interface supports 1-bit, 4-bit, and 8-bit1-bit, and 4-bit MMC buses that provide eMMC 4.51 (JEDEC Standard JESD 84-B451) device access. This interface also provides backward compatibility and supports high-speed SDR transfer modes.

Table 1.9 Analog

	Functional description
12-bit A/D Converter (ADC12)	A 12-bit successive approximation A/D converter is provided. Up to 13 analog input channels are selectable. Temperature sensor output and internal reference voltage are selectable for conversion.
12-bit D/A Converter (DAC12)	A 12-bit D/A converter (DAC12) is provided.
Temperature Sensor (TSN)	The on-chip Temperature Sensor (TSN) determines and monitors the die temperature for reliable operation of the device. The sensor outputs a voltage directly proportional to the die temperature, and the relationship between the die temperature and the output voltage is fairly linear. The output voltage is provided to the ADC12 for conversion and can be further used by the end application.

Table 1.10 Human machine interfaces

Feature	Functional description
Capacitive Touch Sensing Unit (CTSU)	The Capacitive Touch Sensing Unit (CTSU) measures the electrostatic capacitance of the touch sensor. Changes in the electrostatic capacitance are determined by software that enables the CTSU to detect whether a finger is in contact with the touch sensor. The electrode surface of the touch sensor is usually enclosed with an electrical conductor so that a finger does not come into direct contact with the electrode.

Table 1.11 Data processing

Feature	Functional description
Cyclic Redundancy Check (CRC) calculator	The Cyclic Redundancy Check (CRC) calculator generates CRC codes to detect errors in the data. The bit order of CRC calculation results can be switched for LSB-first or MSB-first communication. Additionally, various CRC-generation polynomials are available.
Data Operation Circuit (DOC)	The Data Operation Circuit (DOC) compares, adds, and subtracts 16-bit data. When a selected condition applies, 16-bit data is compared and an interrupt can be generated.

Table 1.8 通信接口（2个中的2个）

Feature	功能说明
增强型串行声音接口(SSIE)增强型串行声音接口(SSIE)外设提供与数字音频设备接口的功能，用于通过串行总线传输I2S单声道TDM音频数据。SSIE支持高达50MHz的音频时钟频率，并可作为从属或主接收器、发送器或收发器运行，以适应各种应用。SSIE在接收器和发送器中包含32级FIFO缓冲区，并支持中断和DMA驱动的数据接收和发送。	
SDMMC主机接口(SDHI)	SDHI和多媒体卡(MMC)接口模块提供将各种外部存储卡连接到MCU所需的功能。SDHI支持1位和4位总线，用于连接支持SD、SDHC和SDXC格式的存储卡。在开发符合SD规范的主机设备时，您必须遵守SD主机辅助产品许可协议(SDHALA)。MMC接口支持提供eMMC4.51（JEDEC标准JESD84B451）器件访问的1位、4位和8位1位和4位MMC总线。该接口还提供向后兼容性并支持高速SDR传输模式。

Table 1.9 Analog

	功能说明
12-bit A/D Converter (ADC12)	提供了一个12位逐次逼近模数转换器。最多可选择13个模拟输入通道。可选择温度传感器输出和内部参考电压进行转换。
12-bit D/A Converter (DAC12)	提供了一个12位DA转换器(DAC12)。
温度传感器(TSN)	片上温度传感器(TSN)确定并监控芯片温度，以确保器件可靠运行。传感器输出与管芯温度成正比的电压，管芯温度与输出电压之间的关系相当线性。输出电压被提供给ADC12进行转换，并且可以被最终应用进一步使用。

Table 1.10 人机界面

Feature	功能说明
电容式触控感应单元(CTSU)	电容式触摸传感单元(CTSU)测量触摸传感器的静电电容。静电电容的变化由软件确定，该软件使CTSU能够检测手指是否与触摸传感器接触。触摸传感器的电极表面通常被电导体包围，因此手指不会直接接触电极。

Table 1.11 数据处理

Feature	功能说明
循环冗余校验(CRC)计算器	循环冗余校验(CRC)计算器生成CRC代码以检测数据中的错误。CRC计算结果的位顺序可以切换为LSB-first或MSB-first通信。此外，还可以使用各种CRC生成多项式。
数据运算电路(DOC)	数据运算电路(DOC)对16位数据进行比较、加法和减法。当适用选定条件时，比较16位数据并可以生成中断。

RA生态工作室

1.2 Block Diagram

Figure 1.1 shows a block diagram of the MCU superset. Some individual devices within the group have a subset of the features.

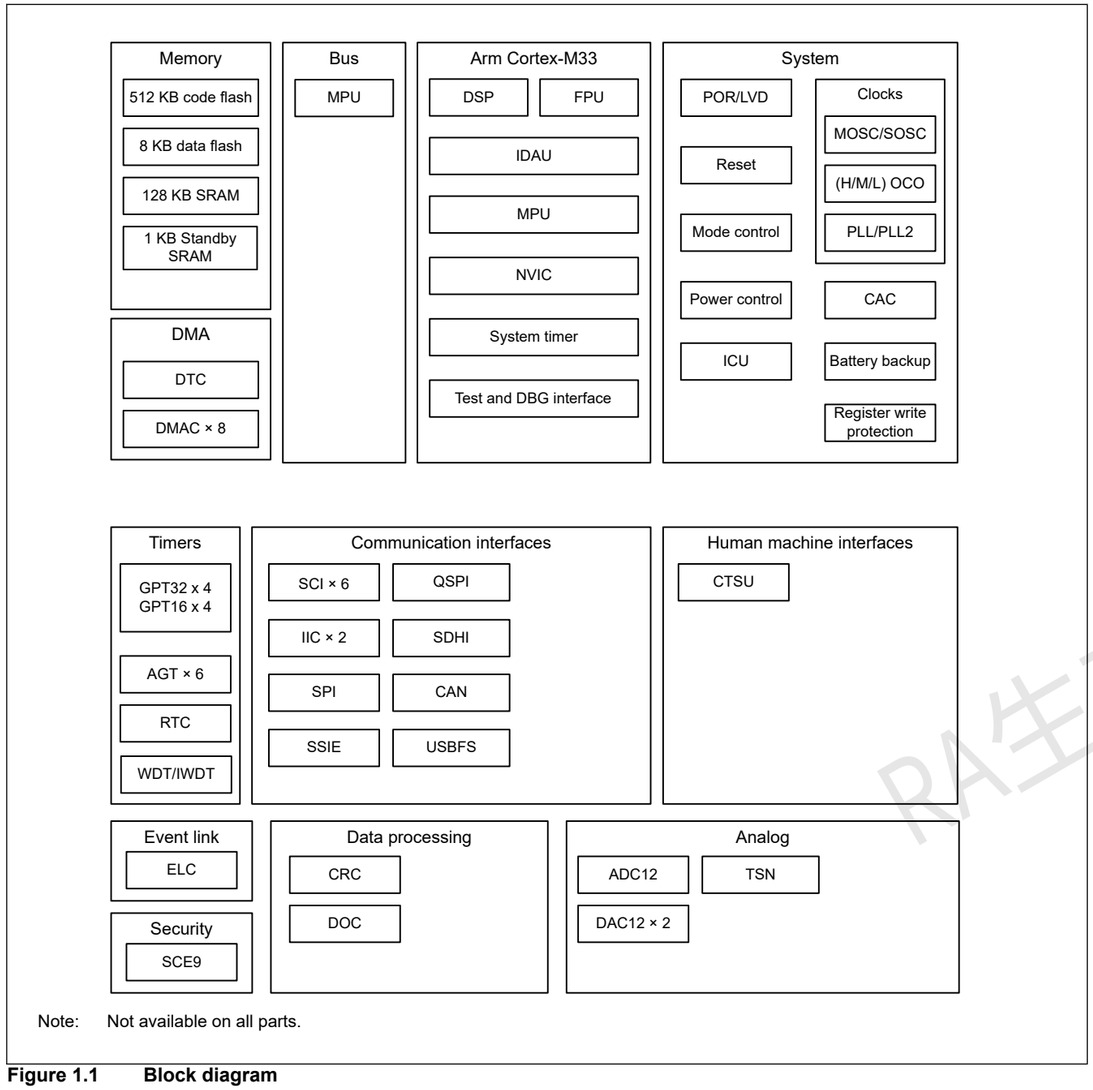

Figure 1.1 Block diagram

1.3 Part Numbering

Figure 1.2 shows the product part number information, including memory capacity and package type. Table 1.12 shows a list of products.

1.2 框图

图1.1显示了MCU超集的框图。组内的某些单独设备具有部分功能。

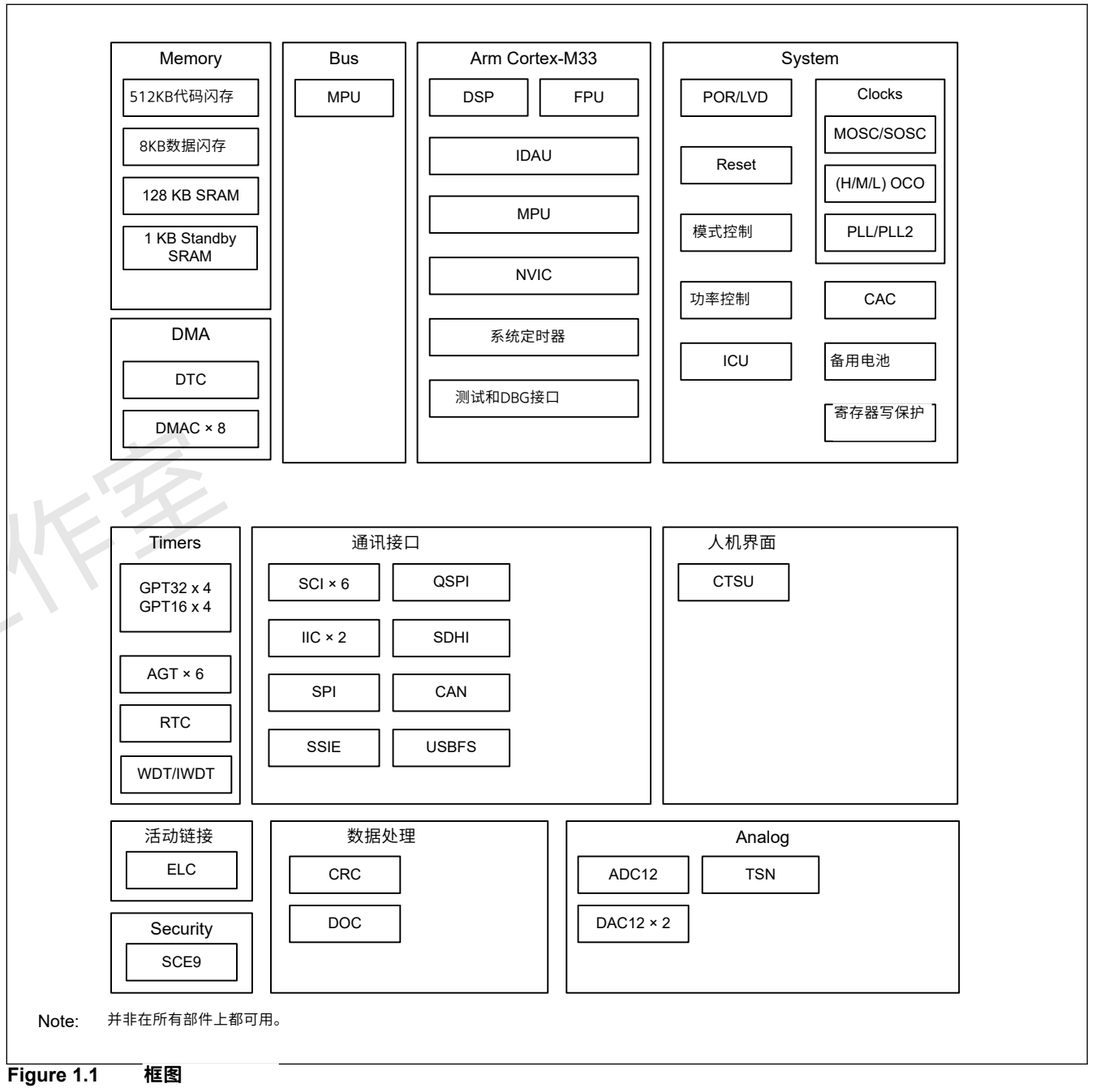

Figure 1.1 框图

1.3 零件编号

图1.2显示了产品部件号信息，包括内存容量和封装类型。表1.12显示了产品列表。

RA生态工作室

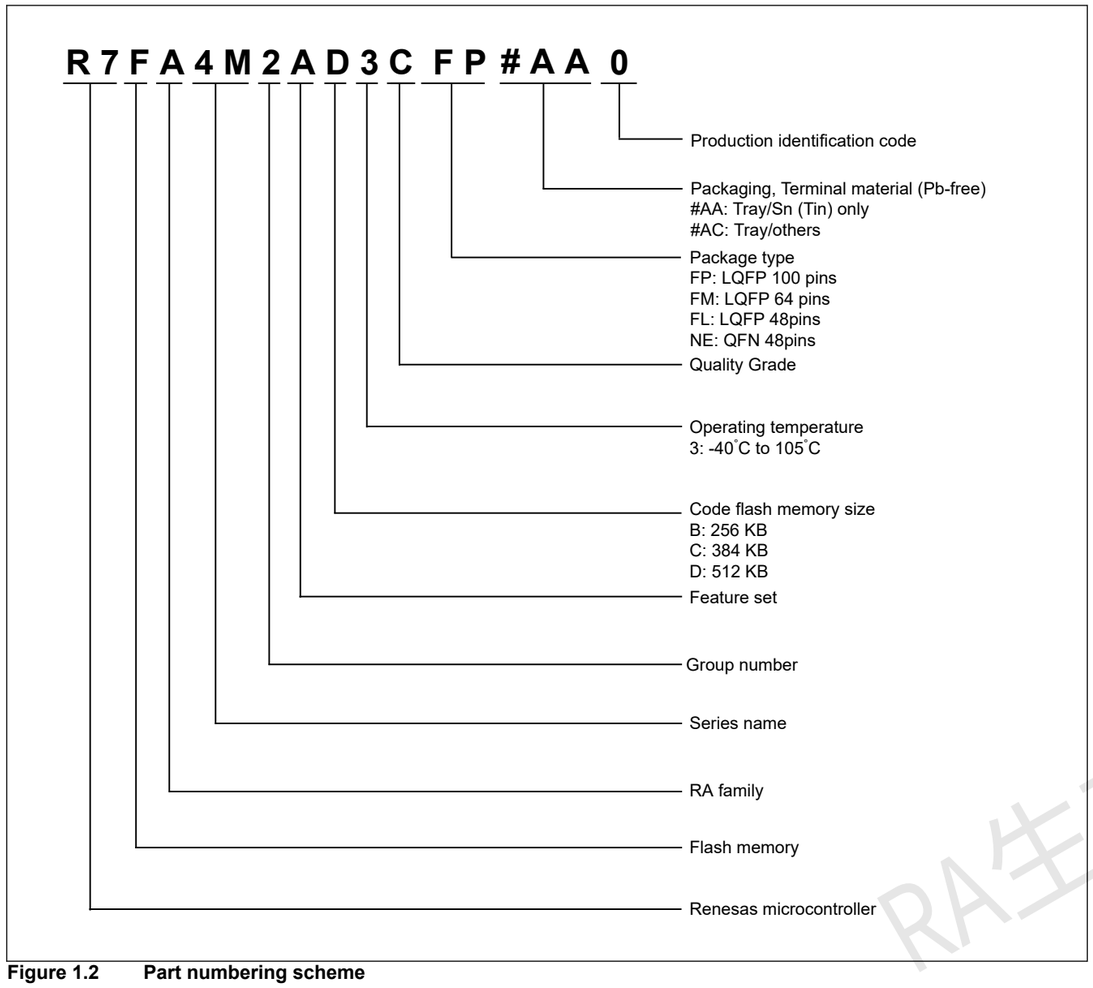

Figure 1.2 Part numbering scheme

Table 1.12 Product list (1 of 2)

Product part number	Package code	Code flash	Data flash	SRAM	Operating temperature
R7FA4M2AD3CFP	PLQP0100KB-B	512 KB	8 KB	128 KB	-40 to +105°C
R7FA4M2AD3CFM	PLQP0064KB-C				
R7FA4M2AD3CFL	PLQP0048KB-B				
R7FA4M2AD3CNE	PWQN0048KC-A				
R7FA4M2AC3CFP	PLQP0100KB-B	384 KB	8 KB	128 KB	-40 to +105°C
R7FA4M2AC3CFM	PLQP0064KB-C				
R7FA4M2AC3CFL	PLQP0048KB-B				
R7FA4M2AC3CNE	PWQN0048KC-A				

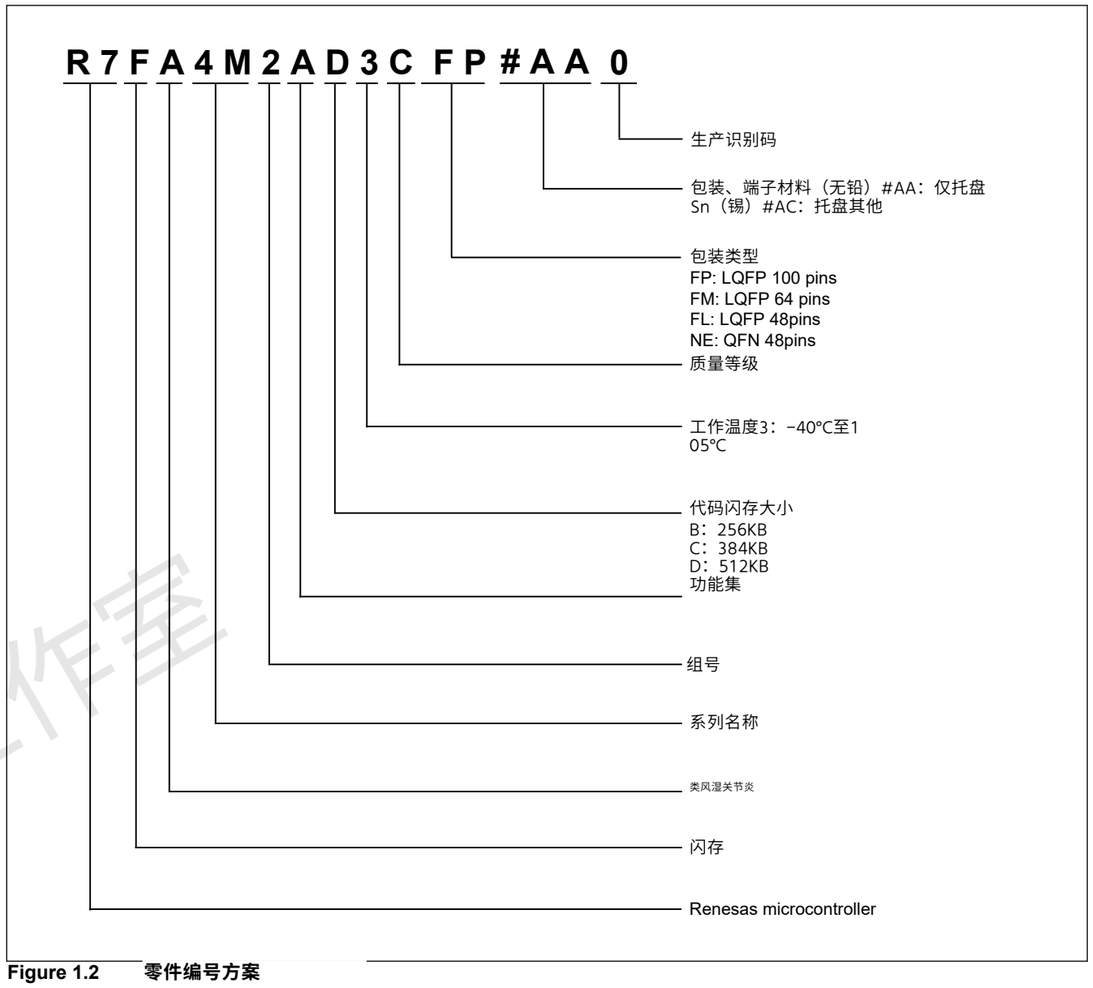

Figure 1.2 零件编号方案

Table 1.12 产品列表(1of2)

产品部件号	包装代码	代码闪存	数据闪存	SRAM	工作温度
R7FA4M2AD3CFP	PLQP0100KB-B	512 KB	8 KB	128 KB	-40 to +105°C
R7FA4M2AD3CFM	PLQP0064KB-C				
R7FA4M2AD3CFL	PLQP0048KB-B				
R7FA4M2AD3CNE	PWQN0048KC-A				
R7FA4M2AC3CFP	PLQP0100KB-B	384 KB	8 KB	128 KB	-40 to +105°C
R7FA4M2AC3CFM	PLQP0064KB-C				
R7FA4M2AC3CFL	PLQP0048KB-B				
R7FA4M2AC3CNE	PWQN0048KC-A				

RA生态工作室

Table 1.12 Product list (2 of 2)

Product part number	Package code	Code flash	Data flash	SRAM	Operating temperature
R7FA4M2AB3CFP	PLQP0100KB-B	256 KB	8 KB	128 KB	-40 to +105°C
R7FA4M2AB3CFM	PLQP0064KB-C				
R7FA4M2AB3CFL	PLQP0048KB-B				
R7FA4M2AB3CNE	PWQN0048KC-A				

RA4M2 Datasheet 1. Overview

Table 1.12 产品列表（2个中的2个）

产品部件号	包装代码	代码闪存	数据闪存	SRAM	工作温度
R7FA4M2AB3CFP	PLQP0100KB-B	256 KB	8 KB	128 KB	-40 to +105°C
R7FA4M2AB3CFM	PLQP0064KB-C				
R7FA4M2AB3CFL	PLQP0048KB-B				
R7FA4M2AB3CNE	PWQN0048KC-A				

RA生态工作室

1.4 Function Comparison

Table 1.13 Function Comparison

Parts number		R7FA4M2AD3CFP R7FA4M2AC3CFP R7FA4M2AB3CFP	R7FA4M2AD3CFM R7FA4M2AC3CFM R7FA4M2AB3CFM	R7FA4M2AD3CFL R7FA4M2AC3CFL R7FA4M2AB3CFL	R7FA4M2AD3CNE R7FA4M2AC3CNE R7FA4M2AB3CNE
Pin count		100	64	48	48
Package		LQFP			QFN
Code flash memory		512KB 384KB 256KB			
Data flash memory		8 KB			
SRAM		128 KB			
	Parity	64 KB			
	ECC	64 KB			
Standby SRAM		1 KB			
DMA	DTC	Yes			
	DMAC	8			
System	CPU clock	100 MHz (max.)			
	CPU clock sources	MOSC, SOSC, HOCO, MOCO, LOCO, PLL			
	CAC	Yes			
	WDT/IWDT	Yes			
	Backup register	128 B			
Communication	SCI	6			
	IIC	2		1	
	SPI	1			
	CAN	1			
	USBFS	Yes			
	QSPI	Yes			
	SSIE	Yes	No		
	SDHI/MMC	Yes	No		
Timers	GPT32*1	4			
	GPT16*1	4			
	AGT*1	6			
	RTC	Yes			
Analog	ADC12	Unit 0: 13	Unit 0: 9	Unit 0: 7	
	DAC12	2			
	TSN	Yes			
HMI	CTSU	12	7	4	
Data processing	CRC	Yes			
	DOC	Yes			
Event control	ELC	Yes			
Security		SCE9, TrustZone, and Lifecycle management			

Note 1. Available pins depend on the Pin count, about details see section 1.7. Pin Lists.

1.4 功能比较

Table 1.13 功能比较

零件编号		R7FA4M2AD3CFP R7FA4M2AC3CFP R7FA4M2AB3CFP	R7FA4M2AD3CFM R7FA4M2AC3CFM R7FA4M2AB3CFM	R7FA4M2AD3CFL R7FA4M2AC3CFL R7FA4M2AB3CFL	R7FA4M2AD3CNE R7FA4M2AC3CNE R7FA4M2AB3CNE
针数		100	64	48	48
Package		LQFP			QFN
代码闪存		512KB 384KB 256KB			
数据闪存		8 KB			
SRAM		128 KB			
	Parity	64 KB			
	ECC	64 KB			
Standby SRAM		1 KB			
DMA	DTC	Yes			
	DMAC	8			
System	中央处理器时钟	100 MHz (max.)			
	CPU时钟源	MOSC, SOSC, HOCO, MOCO, LOCO, PLL			
	CAC	Yes			
	WDT/IWDT	Yes			
	备份寄存器	128 B			
Communication	SCI	6			
	IIC	2		1	
	SPI	1			
	CAN	1			
	USBFS	Yes			
	QSPI	Yes			
	SSIE	Yes	No		
	SDHI/MMC	Yes	No		
Timers	GPT32*1	4			
	GPT16*1	4			
	AGT*1	6			
	RTC	Yes			
Analog	ADC12	Unit 0: 13	Unit 0: 9	Unit 0: 7	
	DAC12	2			
	TSN	Yes			
HMI	CTSU	12	7	4	
数据处理	CRC	Yes			
	DOC	Yes			
事件控制	ELC	Yes			
Security		SCE9、TrustZone和生命周期管理			

注1.可用管脚取决于管脚数，详情见1.7节。引脚列表。

RA生态工作室

1.5 Pin Functions

Table 1.14 Pin functions (1 of 4)

Function	Signal	I/O	Description
Power supply	VCC	Input	Power supply pin. Connect it to the system power supply. Connect this pin to VSS by a 0.1-μF capacitor. The capacitor should be placed close to the pin.
	VCL	I/O	Connect this pin to the VSS pin by the smoothing capacitor used to stabilize the internal power supply. Place the capacitor close to the pin.
	VSS	Input	Ground pin. Connect it to the system power supply (0 V).
	VBATT	Input	Battery Backup power pin
Clock	XTAL	Output	Pins for a crystal resonator. An external clock signal can be input through the EXTAL pin.
	EXTAL	Input	
	XCIN	Input	Input/output pins for the sub-clock oscillator. Connect a crystal resonator between XCOUT and XCIN.
	XCOUT	Output	
	CLKOUT	Output	Clock output pin
Operating mode control	MD	Input	Pin for setting the operating mode. The signal level on this pin must not be changed during operation mode transition on release from the reset state.
System control	RES	Input	Reset signal input pin. The MCU enters the reset state when this signal goes low.
CAC	CACREF	Input	Measurement reference clock input pin
On-chip emulator	TMS	I/O	On-chip emulator or boundary scan pins
	TDI	Input	
	TCK	Input	
	TDO	Output	
	TCLK	Output	Output clock for synchronization with the trace data
	TDATA0 to TDATA3	Output	Trace data output
	SWO	Output	Serial wire trace output pin
	SWDIO	I/O	Serial wire debug data input/output pin
	SWCLK	Input	Serial wire clock pin
Interrupt	NMI	Input	Non-maskable interrupt request pin
	IRQn	Input	Maskable interrupt request pins
	IRQn-DS	Input	Maskable interrupt request pins that can also be used in Deep Software Standby mode

1.5 引脚功能

Table 1.14 引脚功能(1of4)

Function	Signal	I/O	Description
电源	VCC	Input	电源引脚。将其连接到系统电源。通过一个0.1μF电容将此引脚连接到VSS。电容应靠近引脚放置。
	VCL	I/O	通过用于稳定内部电源的平滑电容器将此引脚连接到VSS引脚。将电容器靠近引脚放置。
	VSS	Input	接地引脚。将其连接到系统电源(0V)。
	VBATT	Input	电池备用电源引脚
Clock	XTAL	Output	晶体谐振器的引脚。外部时钟信号可以通过EXTAL引脚输入。
	EXTAL	Input	
	XCIN	Input	副时钟振荡器的输入输出引脚。在XCOUT和XCIN之间连接一个晶体谐振器。
	XCOUT	Output	
	CLKOUT	Output	时钟输出引脚
操作模式控制	MD	Input	用于设置操作模式的引脚。在从复位状态释放的操作模式转换期间，不得更改此引脚上的信号电平。
系统控制	RES	Input	复位信号输入引脚。当该信号变低时，MCU进入复位状态。
CAC	CACREF	Input	测量参考时钟输入引脚
On-chip emulator	TMS	I/O	片上仿真器或边界扫描引脚
	TDI	Input	
	TCK	Input	
	TDO	Output	
	TCLK	Output	用于与跟踪数据同步的输出时钟
	TDATA0 to TDATA3	Output	跟踪数据输出
	SWO	Output	串行线迹输出引脚
	SWDIO	I/O	串行线调试数据输入输出引脚
	SWCLK	Input	串行线时钟引脚
Interrupt	NMI	Input	不可屏蔽中断请求引脚
	IRQn	Input	可屏蔽中断请求引脚
	IRQn-DS	Input	可屏蔽中断请求引脚，也可用于Deep软件待机模式

RA生态工作室

Table 1.14 Pin functions (2 of 4)

Function	Signal	I/O	Description
GPT	GTETRGA, GTETRGB, GTETRGC, GTETRGD	Input	External trigger input pins
	GTIOCnA, GTIOCnB	I/O	Input capture, output compare, or PWM output pins
	GTIU	Input	Hall sensor input pin U
	GTIV	Input	Hall sensor input pin V
	GTIW	Input	Hall sensor input pin W
	GTOUUP	Output	3-phase PWM output for BLDC motor control (positive U phase)
	GTOULO	Output	3-phase PWM output for BLDC motor control (negative U phase)
	GTOVUP	Output	3-phase PWM output for BLDC motor control (positive V phase)
	GTOVLO	Output	3-phase PWM output for BLDC motor control (negative V phase)
	GTOWUP	Output	3-phase PWM output for BLDC motor control (positive W phase)
	GTOWLO	Output	3-phase PWM output for BLDC motor control (negative W phase)
AGT	AGTEEn	Input	External event input enable signals
	AGTIOn	I/O	External event input and pulse output pins
	AGTOn	Output	Pulse output pins
	AGTOAn	Output	Output compare match A output pins
	AGTOBn	Output	Output compare match B output pins
RTC	RTCOUT	Output	Output pin for 1-Hz or 64-Hz clock
	RTCICn	Input	Time capture event input pins
SCI	SCKn	I/O	Input/output pins for the clock (clock synchronous mode)
	RXDn	Input	Input pins for received data (asynchronous mode/clock synchronous mode)
	TXDn	Output	Output pins for transmitted data (asynchronous mode/clock synchronous mode)
	CTSn_RTSn	I/O	Input/output pins for controlling the start of transmission and reception (asynchronous mode/clock synchronous mode), active-low.
	CTSn	Input	Input for the start of transmission.
	SCLn	I/O	Input/output pins for the IIC clock (simple IIC mode)
	SDAn	I/O	Input/output pins for the IIC data (simple IIC mode)
	SCKn	I/O	Input/output pins for the clock (simple SPI mode)
	MISOn	I/O	Input/output pins for slave transmission of data (simple SPI mode)
	MOSIn	I/O	Input/output pins for master transmission of data (simple SPI mode)
	SSn	Input	Chip-select input pins (simple SPI mode), active-low
	RXDXn	Input	Input pins for received data (Extended Serial Mode)
	TXDXn	Output	Output pins for transmitted data (Extended Serial Mode)
	SIOXn	I/O	Input/output pins for receivde or tramsmitted data (Extended Serial Mode)
IIC	SCLn	I/O	Input/output pins for the clock
	SDAn	I/O	Input/output pins for data

Table 1.14 引脚功能(2of4)

Function	Signal	I/O	Description
GPT	GTETRGA, GTETRGB, GTETRGC, GTETRGD	Input	外部触发输入引脚
	GTIOCnA, GTIOCnB	I/O	输入捕捉、输出比较或PWM输出引脚
	GTIU	Input	霍尔传感器输入引脚U
	GTIV	Input	霍尔传感器输入引脚V
	GTIW	Input	霍尔传感器输入引脚W
	GTOUUP	Output	用于BLDC电机控制的3相PWM输出（正U相）
	GTOULO	Output	用于BLDC电机控制的3相PWM输出（负U相）
	GTOVUP	Output	用于BLDC电机控制的3相PWM输出（正V相）
	GTOVLO	Output	用于BLDC电机控制的3相PWM输出（负V相）
	GTOWUP	Output	用于BLDC电机控制的3相PWM输出（正W相）
	GTOWLO	Output	用于BLDC电机控制的3相PWM输出（负W相）
AGT	AGTEEn	Input	外部事件输入使能信号
	AGTIOn	I/O	外部事件输入和脉冲输出引脚
	AGTOn	Output	脉冲输出引脚
	AGTOAn	Output	输出比较匹配A输出引脚
	AGTOBn	Output	输出比较匹配B输出引脚
RTC	RTCOUT	Output	用于1Hz或64Hz时钟的输出引脚
	RTCICn	Input	时间捕捉事件输入引脚
SCI	SCKn	I/O	时钟输入输出引脚（时钟同步模式）
	RXDn	Input	接收数据的输入引脚（异步模式时钟同步模式）
	TXDn	Output	传输数据的输出引脚（异步模式时钟同步模式）
	CTSn_RTSn	I/O	输入输出引脚用于控制发送和接收的开始（异步模式时钟同步模式），低电平有效。
	CTSn	Input	开始传输的输入。
	SCLn	I/O	IIC时钟的输入输出引脚（简单IIC模式）
	SDAn	I/O	IIC数据的输入输出引脚（简单IIC模式）
	SCKn	I/O	时钟输入输出引脚（简单SPI模式）
	MISOn	I/O	用于从机传输数据的输入输出引脚（简单SPI模式）
	MOSIn	I/O	输入输出引脚用于主数据传输（简单SPI模式）
	SSn	Input	片选输入引脚（简单SPI模式），低电平有效
	RXDXn	Input	接收数据的输入引脚（扩展串行模式）
	TXDXn	Output	传输数据的输出引脚（扩展串行模式）
	SIOXn	I/O	用于接收或传输数据的输入输出引脚（扩展串行 Mode)
IIC	SCLn	I/O	时钟的输入输出引脚
	SDAn	I/O	数据输入输出引脚

RA生态工作室

Table 1.14 Pin functions (3 of 4)

Function	Signal	I/O	Description
SPI	RSPCKA	I/O	Clock input/output pin
	MOSIA	I/O	Input or output pins for data output from the master
	MISOA	I/O	Input or output pins for data output from the slave
	SSLA0	I/O	Input or output pin for slave selection
	SSLA1 to SSLA3	Output	Output pins for slave selection
CAN	CRXn	Input	Receive data
	CTXn	Output	Transmit data
USBFS	VCC_USB	Input	Power supply pin
	VSS_USB	Input	Ground pin
	USB_DP	I/O	D+ pin of the USB on-chip transceiver. Connect this pin to the D+ pin of the USB bus.
	USB_DM	I/O	D- pin of the USB on-chip transceiver. Connect this pin to the D- pin of the USB bus.
	USB_VBUS	Input	USB cable connection monitor pin. Connect this pin to VBUS of the USB bus. The VBUS pin status (connected or disconnected) can be detected when the USB module is operating as a function controller.
	USB_EXICEN	Output	Low-power control signal for external power supply (OTG) chip
	USB_VBUSEN	Output	VBUS (5 V) supply enable signal for external power supply chip
	USB_OVRCURA, USB_OVRCURB	Input	Connect the external overcurrent detection signals to these pins. Connect the VBUS comparator signals to these pins when the OTG power supply chip is connected.
	USB_OVRCURA-DS	Input	Overcurrent pins for USBFS that can also be used in Deep Software Standby mode. Connect the external overcurrent detection signals to these pins. Connect the VBUS comparator signals to these pins when the OTG power supply chip is connected.
	USB_ID	Input	Connect the MicroAB connector ID input signal to this pin during operation in OTG mode
QSPI	QSPCLK	Output	QSPI clock output pin
	QSSL	Output	QSPI slave output pin
	QIO0 to QIO3	I/O	Data0 to Data3
SSIE	SSIBCK0	I/O	SSIE serial bit clock pins
	SSILRCK0/SSIFS0	I/O	LR clock/frame synchronization pins
	SSITXD0	Output	Serial data output pin
	SSIRXD0	Input	Serial data input pin
	SSIDATA0	I/O	Serial data input/output pins
	AUDIO_CLK	Input	External clock pin for audio (input oversampling clock)
SDHI/MMC	SD0CLK	Output	SD clock output pins
	SD0CMD	I/O	Command output pin and response input signal pins
	SD0DAT0 to SD0DAT73	I/O	SD and MMC data bus pins
	SD0CD	Input	SD card detection pins
	SD0WP	Input	SD write-protect signals
Analog power supply	AVCC0	Input	Analog voltage supply pin. This is used as the analog power supply for the respective modules. Supply this pin with the same voltage as the VCC pin.

Table 1.14 引脚功能(3of4)

Function	Signal	I/O	Description
SPI	RSPCKA	I/O	时钟输入输出引脚
	MOSIA	I/O	用于从主机输出数据的输入或输出引脚
	MISOA	I/O	从机数据输出的输入或输出引脚
	SSLA0	I/O	从机选择的输入或输出引脚
	SSLA1 to SSLA3	Output	从机选择的输出引脚
CAN	CRXn	Input	接收数据
	CTXn	Output	传输数据
USBFS	VCC_USB	Input	电源引脚
	VSS_USB	Input	接地引脚
	USB_DP	I/O	USB片上收发器的D+引脚。将此引脚连接到USB总线的D+引脚。
	USB_DM	I/O	USB片上收发器的Dpin。将此引脚连接到USB总线的Dpin。
	USB_VBUS	Input	USB电缆连接监视器引脚。将此引脚连接到USB总线的VBUS。当USB模块作为功能控制器运行时，可以检测VBUS引脚状态（连接或断开）。
	USB_EXICEN	Output	用于外部电源(OTG)芯片的低功耗控制信号
	USB_VBUSEN	Output	VBUS(5V)为外部供电芯片供电使能信号
	USB_OVRCURA, USB_OVRCURB	Input	将外部过电流检测信号连接到这些引脚。 连接OTG电源芯片时，将VBUS比较器信号连接到这些引脚。
	USB_OVRCURA-DS	Input	也可在DeepSoftware中使用的USBFS过流引脚 待机模式。 将外部过电流检测信号连接到这些引脚。 连接OTG电源芯片时，将VBUS比较器信号连接到这些引脚。
	USB_ID	Input	在OTG模式下运行期间，将MicroAB连接器ID输入信号连接到此引脚
QSPI	QSPCLK	Output	QSPI时钟输出引脚
	QSSL	Output	QSPI从机输出引脚
	QIO0 to QIO3	I/O	Data0 to Data3
SSIE	SSIBCK0	I/O	SSIE串行位时钟引脚
	SSILRCK0/SSIFS0	I/O	LR时钟帧同步管脚
	SSITXD0	Output	串行数据输出引脚
	SSIRXD0	Input	串行数据输入引脚
	SSIDATA0	I/O	串行数据输入输出引脚
	AUDIO_CLK	Input	音频外部时钟引脚（输入过采样时钟）
SDHI/MMC	SD0CLK	Output	SD时钟输出引脚
	SD0CMD	I/O	命令输出引脚和响应输入信号引脚
	SD0DAT0 to SD0DAT73	I/O	SD和MMC数据总线引脚
	SD0CD	Input	SD卡检测引脚
	SD0WP	Input	SD write-protect signals
模拟电源	AVCC0	Input	模拟电压电源引脚。这用作各个模块的模拟电源。为该引脚提供与VCC引脚相同的电压。

RA生态工作室

Table 1.14 Pin functions (4 of 4)

Function	Signal	I/O	Description
	AVSS0	Input	Analog ground pin. This is used as the analog ground for the respective modules. Supply this pin with the same voltage as the VSS pin.
	VREFH0	Input	Analog reference voltage supply pin for the ADC12 (unit 0). Connect this pin to AVCC0 when not using the ADC12 (unit 0).
	VREFL0	Input	Analog reference ground pin for the ADC12. Connect this pin to AVSS0 when not using the ADC12 (unit 0).
	VREFH	Input	Analog reference voltage supply pin for the ADC12 (unit 1) and D/A Converter. Connect this pin to AVCC0 when not using the ADC12 (unit 1) and D/A Converter.
	VREFL	Input	Analog reference ground pin for the ADC12 and D/A Converter. Connect this pin to AVSS0 when not using the ADC12 (unit 1) and D/A Converter.
ADC12	ANmn	Input	Input pins for the analog signals to be processed by the A/D converter. (m: ADC unit number, n: pin number)
	ADTRGm	Input	Input pins for the external trigger signals that start the A/D conversion, active-low.
DAC12	DAn	Output	Output pins for the analog signals processed by the D/A converter.
CTSU	TSn	Input	Capacitive touch detection pins (touch pins)
	TSCAP	I/O	Secondary power supply pin for the touch driver
I/O ports	Pmn	I/O	General-purpose input/output pins (m: port number, n: pin number)
	P200	Input	General-purpose input pin

RA生态工作室

RA4M2 Datasheet 1. Overview

Table 1.14 引脚功能（4个，共4个）

Function	Signal	I/O	Description
	AVSS0	Input	模拟接地引脚。这用作各个模块的模拟地。为该引脚提供与VSS引脚相同的电压。
	VREFH0	Input	ADC12（单元0）的模拟参考电压电源引脚。不使用ADC12（单元0）时，将此引脚连接到AVCC0。
	VREFL0	Input	ADC12的模拟参考接地引脚。将此引脚连接到不使用ADC12（单元0）时的AVSS0。
	VREFH	Input	ADC12（单元1）和DA的模拟参考电压电源引脚转换器。不使用ADC12（单元1）和DA转换器时，将此引脚连接到AVCC0。
	VREFL	Input	ADC12和DA转换器的模拟参考接地引脚。不使用ADC12（单元1）时将此引脚连接到AVSS0，并且D/A Converter.
ADC12	ANmn	Input	AD转换器要处理的模拟信号的输入引脚。（m：ADC单元编号，n：引脚编号）
	ADTRGm	Input	用于启动AD转换的外部触发信号的输入引脚，低电平有效。
DAC12	DAn	Output	由数模转换器处理的模拟信号的输出引脚。
CTSU	TSn	Input	电容式触摸检测引脚（触摸引脚）
	TSCAP	I/O	触摸驱动器的辅助电源引脚
I/O ports	Pmn	I/O	通用输入输出引脚（m：端口号，n：引脚号）
	P200	Input	通用输入引脚

1.6 Pin Assignments

The following figures show the pin assignments from the top view.

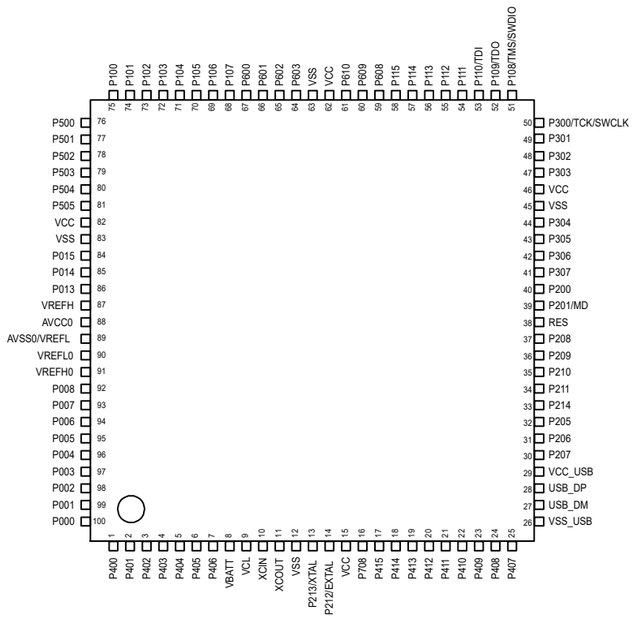

Figure 1.3 Pin assignment for LQFP 100-pin

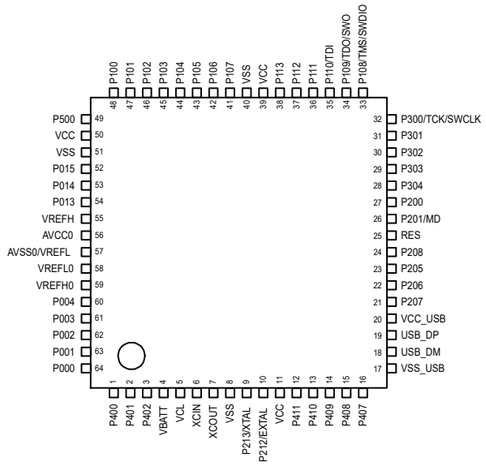

Figure 1.4 Pin assignment for LQFP 64-pin

RA生态工作室

RA4M2 Datasheet 1. Overview

1.6 引脚分配

下图从顶视图显示了引脚分配。

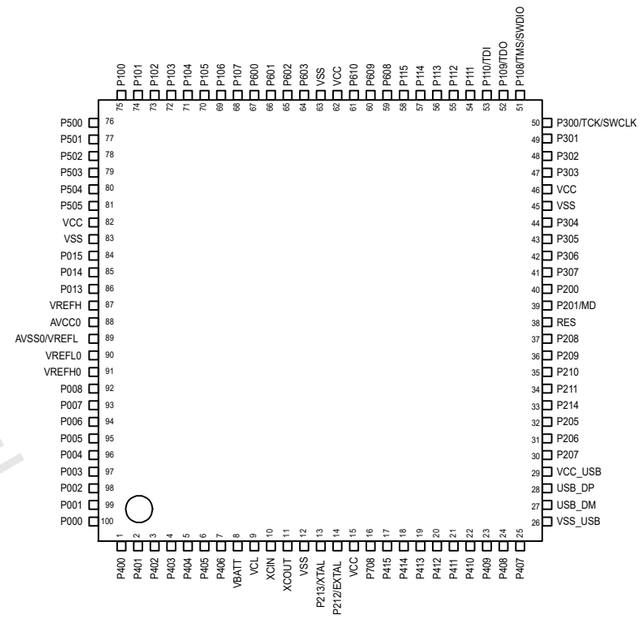

Figure 1.3 LQFP100引脚的引脚分配

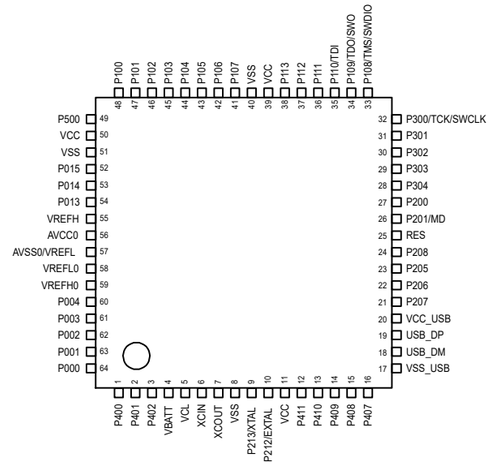

Figure 1.4 LQFP64引脚的引脚分配

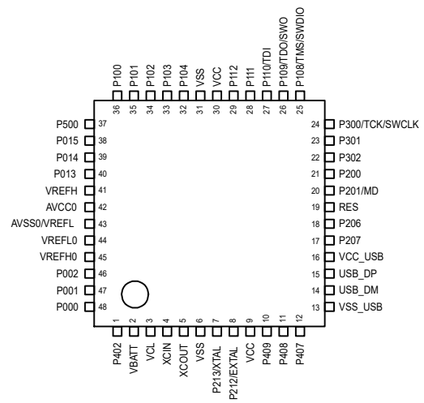

Figure 1.5 Pin assignment for LQFP 48-pin

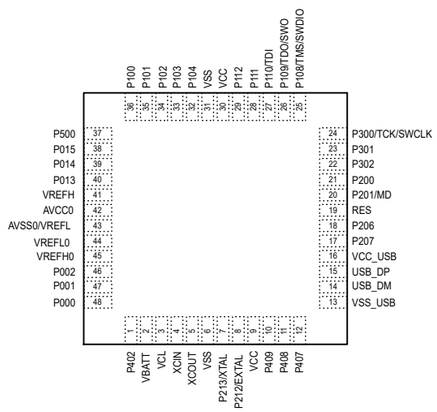

Figure 1.6 Pin assignment for QFN 48-pin

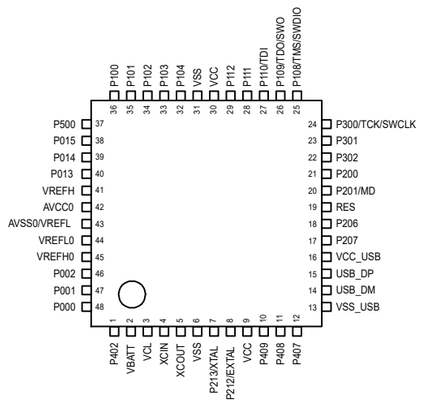

Figure 1.5 LQFP48引脚的引脚分配

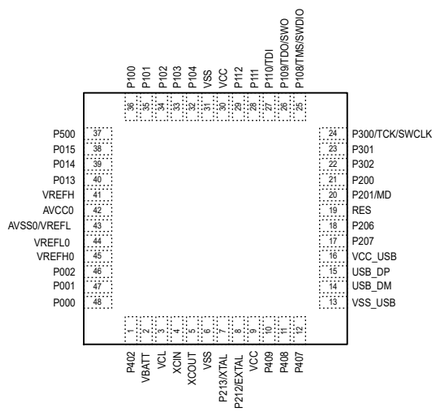

Figure 1.6 QFN48引脚的引脚分配

RA生态工作室

1.7 Pin Lists

Table 1.15 Pin list (1 of 3)

LQFP100	LQFP64	LQFP48, QFN48	Power, System, Clock, Debug, CAC	I/O ports	Ex. Interrupt	SCI/IIC/SPI/CAN/USBFS/QSPI/SSIE/SDHI/MMC	GPT/AGT/RTC	ADC12/DAC12	CTSU
1	1	—	—	P400	IRQ0	SCK4/SCL0_A/AUDIO_CLK	GTIOC6A/AGTIO1	—	—
2	2	—	—	P401	IRQ5-DS	CTS4_RTS4/SS4/SDA0_A/CTX0	GTETRGA/GTIOC6B	—	—
3	3	1	CACREF	P402	IRQ4-DS	CTS4/CRX0/AUDIO_CLK	AGTIO0/AGTIO1/AGTIO2/AGTIO3/RTCIC0	—	—
4	—	—	—	P403	IRQ14-DS	SSIBCK0_A	GTIOC3A/AGTIO0/AGTIO1/AGTIO2/AGTIO3/RTCIC1	—	—
5	—	—	—	P404	IRQ15-DS	SSILRCK0/SSIFS0_A	GTIOC3B/AGTIO0/AGTIO1/AGTIO2/AGTIO3/RTCIC2	—	—
6	—	—	—	P405	—	SSITXD0_A	GTIOC1A	—	—
7	—	—	—	P406	—	SSIRXD0_A	GTIOC1B/AGTO5	—	—
8	4	2	VBATT	—	—	—	—	—	—
9	5	3	VCL	—	—	—	—	—	—
10	6	4	XCIN	—	—	—	—	—	—
11	7	5	XCOUT	—	—	—	—	—	—
12	8	6	VSS	—	—	—	—	—	—
13	9	7	XTAL	P213	IRQ2	TXD1/MOSI1/SDA1/TXDX1/SIOX1	GTETRGC/GTIOC0A/AGTEE2	—	—
14	10	8	EXTAL	P212	IRQ3	RXD1/MISO1/SCL1/RXDX1	GTETRGD/GTIOC0B/AGTEE1	—	—
15	11	9	VCC	—	—	—	—	—	—
16	—	—	CACREF	P708	IRQ11	RXD1/MISO1/SCL1/RXDX1/AUDIO_CLK	—	—	TS12
17	—	—	—	P415	IRQ8	USB_VBUSEN/SD0CD	GTIOC0A/AGTIO4	—	TS11
18	—	—	—	P414	IRQ9	CTS0/SD0WP	GTIOC0B/AGTIO5	—	TS10
19	—	—	—	P413	—	CTS0_RTS0/SS0/SD0CLK_A	GTOUUP/AGTEE3	—	TS09
20	—	—	—	P412	—	SCK0/CTS3/SD0CMD_A	GTOULO/AGTEE1	—	TS08
21	12	—	—	P411	IRQ4	TXD0/MOSI0/SDA0/CTS3_RTS3/SS3/SD0DAT0_A	GTOVUP/AGTOA1	—	TS07
22	13	—	—	P410	IRQ5	RXD0/MISO0/SCL0/SCK3/SD0DAT1_A	GTOVLO/AGTOB1	—	TS06
23	14	10	—	P409	IRQ6	TXD3/MOSI3/SDA3/USB_EXICEN	GTOWUP/AGTOA2	—	TS05
24	15	11	—	P408	IRQ7	CTS4/RXD3/MISO3/SCL3/SCL0_B/USB_ID	GTOWLO/GTIOC6B/AGTOB2	—	TS04
25	16	12	—	P407	—	CTS4_RTS4/SS4/SDA0_B/USB_VBUS	GTIOC6A/AGTIO0/RTCOUT	ADTRG0	TS03
26	17	13	VSS_USB	—	—	—	—	—	—
27	18	14	USB_DM	—	—	—	—	—	—
28	19	15	USB_DP	—	—	—	—	—	—
29	20	16	VCC_USB	—	—	—	—	—	—
30	21	17	—	P207	—	TXD4/MOSI4/SDA4/QSSL	—	—	TSCAP
31	22	18	—	P206	IRQ0-DS	RXD4/MISO4/SCL4/CTS9/SDA1_B/USB_VBUSEN/SD0DAT2_A	GTIU	—	TS02
32	23	—	CLKOUT	P205	IRQ1-DS	TXD4/MOSI4/SDA4/CTS9_RTS9/SS9/SCL1_B/USB_OVRCURA-DS/SD0DAT3_A	GTIV/GTIOC4A/AGTO1	—	TS01
33	—	—	TCLK	P214	—	QSPCLK/SD0CLK_B	GTIU/AGTO5	—	—
34	—	—	TDATA0	P211	—	QIO0/SD0CMD_B	GTIV/AGTOA5	—	—
35	—	—	TDATA1	P210	—	QIO1/SD0CD	GTIW/AGTOB5	—	—
36	—	—	TDATA2	P209	—	QIO2/SD0WP	GTOVUP/AGTEE5	—	—
37	24	—	TDATA3	P208	—	QIO3/SD0DAT0_B	GTOVLO	—	—
38	25	19	RES	—	—	—	—	—	—
39	26	20	MD	P201	—	—	—	—	—
40	27	21	—	P200	NMI	—	—	—	—
41	—	—	—	P307	—	QIO0	GTOUUP/AGTEE4	—	—
42	—	—	—	P306	—	QSSL	GTOULO/AGTOA2	—	—
43	—	—	—	P305	IRQ8	QSPCLK	GTOWUP/AGTOB2	—	—
44	28	—	—	P304	IRQ9	—	GTOWLO/GTIOC7A/AGTEE2	—	—

1.7 引脚列表

Table 1.15 引脚列表（1个，共3个）

LQFP100	LQFP64	LQFP48, QFN48	电源、系统、时钟、调试、CAC	I/O ports	前任。打断	SCI/IIC/SPI/CAN/USBFS/QSPI/SSIE/SDHI/MMC	GPT/AGT/RTC	ADC12/DAC12	CTSU
1	1	—	—	P400	IRQ0	SCK4/SCL0_A/AUDIO_CLK	GTIOC6A/AGTIO1	—	—
2	2	—	—	P401	IRQ5-DS	CTS4_RTS4/SS4/SDA0_A/CTX0	GTETRGA/GTIOC6B	—	—
3	3	1	CACREF	P402	IRQ4-DS	CTS4/CRX0/AUDIO_CLK	AGTIO0/AGTIO1/AGTIO2/AGTIO3/RTCIC0	—	—
4	—	—	—	P403	IRQ14-DS	SSIBCK0_A	GTIOC3A/AGTIO0/AGTIO1/AGTIO2/AGTIO3/RTCIC1	—	—
5	—	—	—	P404	IRQ15-DS	SSILRCK0/SSIFS0_A	GTIOC3B/AGTIO0/AGTIO1/AGTIO2/AGTIO3/RTCIC2	—	—
6	—	—	—	P405	—	SSITXD0_A	GTIOC1A	—	—
7	—	—	—	P406	—	SSIRXD0_A	GTIOC1B/AGTO5	—	—
8	4	2	VBATT	—	—	—	—	—	—
9	5	3	VCL	—	—	—	—	—	—
10	6	4	XCIN	—	—	—	—	—	—
11	7	5	XCOUT	—	—	—	—	—	—
12	8	6	VSS	—	—	—	—	—	—
13	9	7	XTAL	P213	IRQ2	TXD1/MOSI1/SDA1/TXDX1/SIOX1	GTETRGC/GTIOC0A/AGTEE2	—	—
14	10	8	EXTAL	P212	IRQ3	RXD1/MISO1/SCL1/RXDX1	GTETRGD/GTIOC0B/AGTEE1	—	—
15	11	9	VCC	—	—	—	—	—	—
16	—	—	CACREF	P708	IRQ11	RXD1/MISO1/SCL1/RXDX1/AUDIO_CLK	—	—	TS12
17	—	—	—	P415	IRQ8	USB_VBUSEN/SD0CD	GTIOC0A/AGTIO4	—	TS11
18	—	—	—	P414	IRQ9	CTS0/SD0WP	GTIOC0B/AGTIO5	—	TS10
19	—	—	—	P413	—	CTS0_RTS0/SS0/SD0CLK_A	GTOUUP/AGTEE3	—	TS09
20	—	—	—	P412	—	SCK0/CTS3/SD0CMD_A	GTOULO/AGTEE1	—	TS08
21	12	—	—	P411	IRQ4	TXD0/MOSI0/SDA0/CTS3_RTS3/SS3/SD0DAT0_A	GTOVUP/AGTOA1	—	TS07
22	13	—	—	P410	IRQ5	RXD0/MISO0/SCL0/SCK3/SD0DAT1_A	GTOVLO/AGTOB1	—	TS06
23	14	10	—	P409	IRQ6	TXD3/MOSI3/SDA3/USB_EXICEN	GTOWUP/AGTOA2	—	TS05
24	15	11	—	P408	IRQ7	CTS4/RXD3/MISO3/SCL3/SCL0_B/USB_ID	GTOWLO/GTIOC6B/AGTOB2	—	TS04
25	16	12	—	P407	—	CTS4_RTS4/SS4/SDA0_B/USB_VBUS	GTIOC6A/AGTIO0/RTCOUT	ADTRG0	TS03
26	17	13	VSS_USB	—	—	—	—	—	—
27	18	14	USB_DM	—	—	—	—	—	—
28	19	15	USB_DP	—	—	—	—	—	—
29	20	16	VCC_USB	—	—	—	—	—	—
30	21	17	—	P207	—	TXD4/MOSI4/SDA4/QSSL	—	—	TSCAP
31	22	18	—	P206	IRQ0-DS	RXD4/MISO4/SCL4/CTS9/SDA1_B/USB_VBUSEN/SD0DAT2_A	GTIU	—	TS02
32	23	—	CLKOUT	P205	IRQ1-DS	TXD4/MOSI4/SDA4/CTS9_RTS9/SS9/SCL1_B/USB_OVRCURA-DS/SD0DAT3_A	GTIV/GTIOC4A/AGTO1	—	TS01
33	—	—	TCLK	P214	—	QSPCLK/SD0CLK_B	GTIU/AGTO5	—	—
34	—	—	TDATA0	P211	—	QIO0/SD0CMD_B	GTIV/AGTOA5	—	—
35	—	—	TDATA1	P210	—	QIO1/SD0CD	GTIW/AGTOB5	—	—
36	—	—	TDATA2	P209	—	QIO2/SD0WP	GTOVUP/AGTEE5	—	—
37	24	—	TDATA3	P208	—	QIO3/SD0DAT0_B	GTOVLO	—	—
38	25	19	RES	—	—	—	—	—	—
39	26	20	MD	P201	—	—	—	—	—
40	27	21	—	P200	NMI	—	—	—	—
41	—	—	—	P307	—	QIO0	GTOUUP/AGTEE4	—	—
42	—	—	—	P306	—	QSSL	GTOULO/AGTOA2	—	—
43	—	—	—	P305	IRQ8	QSPCLK	GTOWUP/AGTOB2	—	—
44	28	—	—	P304	IRQ9	—	GTOWLO/GTIOC7A/AGTEE2	—	—

RA生态工作室

Table 1.15 Pin list (2 of 3)

LQFP100	LQFP64	LQFP48, QFN48	Power, System, Clock, Debug, CAC	I/O ports	Ex. Interrupt	SCI/IIC/SPI/CAN/USBFS/QSPI/SSIE/SDHI/MMC	GPT/AGT/RTC	ADC12/DAC12	CTSU
45	—	—	VSS	—	—	—	—	—	—
46	—	—	VCC	—	—	—	—	—	—
47	29	—	—	P303	—	CTS9	GTIOC7B	—	—
48	30	22	—	P302	IRQ5	TXD2/MOSI2/SDA2/TXDX2/SIOX2/SSLA3	GTOUUP/GTIOC4A	—	—
49	31	23	—	P301	IRQ6	RXD2/MISO2/SCL2/RXDX2/CTS9_RTS9/SS9/SSLA2	GTOULO/GTIOC4B/AGTIO0	—	—
50	32	24	TCK/SWCLK	P300	—	SSLA1	GTOUUP/GTIOC0A	—	—
51	33	25	TMS/SWDIO	P108	—	CTS9_RTS9/SS9/SSLA0	GTOULO/GTIOC0B/AGTOA3	—	—
52	34	26	TDO/SWO/CLKOUT	P109	—	TXD9/MOSI9/SDA9/MOSIA	GTOVUP/GTIOC1A/AGTOB3	—	—
53	35	27	TDI	P110	IRQ3	CTS2_RTS2/SS2/RXD9/MISO9/SCL9/MISOA	GTOVLO/GTIOC1B/AGTEE3	—	—
54	36	28	—	P111	IRQ4	SCK2/SCK9/RSPCKA	GTIOC3A/AGTOA5	—	—
55	37	29	—	P112	—	TXD2/MOSI2/SDA2/TXDX2/SIOX2/SCK1/SSLA0/QSSL/ SSIBCK0_B	GTIOC3B/AGTOB5	—	—
56	38	—	—	P113	—	RXD2/MISO2/SCL2/RXDX2/SSILRCK0/SSIFS0_B	GTIOC2A/AGTEE5	—	—
57	—	—	—	P114	—	CTS9/SSIRXD0_B	GTIOC2B/AGTIO5	—	—
58	—	—	—	P115	—	SSITXD0_B	GTIOC4A	—	—
59	—	—	—	P608	—	—	GTIOC4B	—	—
60	—	—	—	P609	—	—	GTIOC5A/AGTO5	—	—
61	—	—	—	P610	—	—	GTIOC5B/AGTO4	—	—
62	39	30	VCC	—	—	—	—	—	—
63	40	31	VSS	—	—	—	—	—	—
64	—	—	—	P603	—	CTS9_RTS9/SS9	GTIOC7A/AGTIO4	—	—
65	—	—	—	P602	—	TXD9/MOSI9/SDA9	GTIOC7B/AGTO3	—	—
66	—	—	—	P601	—	RXD9/MISO9/SCL9	GTIOC6A/AGTEE3	—	—
67	—	—	CACREF/CLKOUT	P600	—	SCK9	GTIOC6B/AGTIO3	—	—
68	41	—	—	P107	—	—	AGTOA0	—	—
69	42	—	—	P106	—	—	AGTOB0	—	—
70	43	—	—	P105	IRQ0	—	GTETRGA/GTIOC1A/AGTO2	—	—
71	44	32	—	P104	IRQ1	QIO2	GTETRGB/GTIOC1B/AGTEE2	—	—
72	45	33	—	P103	—	CTS0_RTS0/SS0/CTX0/QIO3	GTOWUP/GTIOC2A/AGTIO2	—	—
73	46	34	—	P102	—	SCK0/CRX0/QIO0	GTOWLO/GTIOC2B/AGTO0	ADTRG0	—
74	47	35	—	P101	IRQ1	TXD0/MOSI0/SDA0/CTS1_RTS1/SS1/QIO1	GTETRGB/GTIOC5A/AGTEE0	—	—
75	48	36	—	P100	IRQ2	RXD0/MISO0/SCL0/SCK1/QSPCLK	GTETRGA/GTIOC5B/AGTIO0	—	—
76	49	37	CACREF	P500	—	USB_VBUSEN/QSPCLK	GTIU/AGTOA0	AN016	—
77	—	—	—	P501	IRQ11	USB_OVRCURA/QSSL	GTIV/AGTOB0	—	—
78	—	—	—	P502	IRQ12	USB_OVRCURB/QIO0	GTIW/AGTOA2	—	—
79	—	—	—	P503	—	USB_EXICEN/QIO1	GTETRGC/AGTOB2	—	—
80	—	—	—	P504	—	USB_ID/QIO2	GTETRGD/AGTOA3	—	—
81	—	—	—	P505	IRQ14	QIO3	AGTOB3	—	—
82	50	—	VCC	—	—	—	—	—	—
83	51	—	VSS	—	—	—	—	—	—
84	52	38	—	P015	IRQ13	—	—	AN013/DA1	—
85	53	39	—	P014	—	—	—	AN012/DA0	—
86	54	40	—	P013	—	—	—	AN011	—
87	55	41	VREFH	—	—	—	—	—	—
88	56	42	AVCC0	—	—	—	—	—	—
89	57	43	AVSS0/VREFL	—	—	—	—	—	—
90	58	44	VREFL0	—	—	—	—	—	—
91	59	45	VREFH0	—	—	—	—	—	—
92	—	—	—	P008	IRQ12-DS	—	—	AN008	—

Table 1.15 引脚列表（2个，共3个）

LQFP100	LQFP64	LQFP48, QFN48	电源、系统、时钟、调试、CAC	I/O ports	前任。打断	SCI/IIC/SPI/CAN/USBFS/QSPI/SSIE/SDHI/MMC	GPT/AGT/RTC	ADC12/DAC12	CTSU
45	—	—	VSS	—	—	—	—	—	—
46	—	—	VCC	—	—	—	—	—	—
47	29	—	—	P303	—	CTS9	GTIOC7B	—	—
48	30	22	—	P302	IRQ5	TXD2/MOSI2/SDA2/TXDX2/SIOX2/SSLA3	GTOUUP/GTIOC4A	—	—
49	31	23	—	P301	IRQ6	RXD2/MISO2/SCL2/RXDX2/CTS9_RTS9/SS9/SSLA2	GTOULO/GTIOC4B/AGTIO0	—	—
50	32	24	TCK/SWCLK	P300	—	SSLA1	GTOUUP/GTIOC0A	—	—
51	33	25	TMS/SWDIO	P108	—	CTS9_RTS9/SS9/SSLA0	GTOULO/GTIOC0B/AGTOA3	—	—
52	34	26	TDO/SWO/CLKOUT	P109	—	TXD9/MOSI9/SDA9/MOSIA	GTOVUP/GTIOC1A/AGTOB3	—	—
53	35	27	TDI	P110	IRQ3	CTS2_RTS2/SS2/RXD9/MISO9/SCL9/MISOA	GTOVLO/GTIOC1B/AGTEE3	—	—
54	36	28	—	P111	IRQ4	SCK2/SCK9/RSPCKA	GTIOC3A/AGTOA5	—	—
55	37	29	—	P112	—	TXD2/MOSI2/SDA2/TXDX2/SIOX2/SCK1/SSLA0/QSSL/ SSIBCK0_B	GTIOC3B/AGTOB5	—	—
56	38	—	—	P113	—	RXD2/MISO2/SCL2/RXDX2/SSILRCK0/SSIFS0_B	GTIOC2A/AGTEE5	—	—
57	—	—	—	P114	—	CTS9/SSIRXD0_B	GTIOC2B/AGTIO5	—	—
58	—	—	—	P115	—	SSITXD0_B	GTIOC4A	—	—
59	—	—	—	P608	—	—	GTIOC4B	—	—
60	—	—	—	P609	—	—	GTIOC5A/AGTO5	—	—
61	—	—	—	P610	—	—	GTIOC5B/AGTO4	—	—
62	39	30	VCC	—	—	—	—	—	—
63	40	31	VSS	—	—	—	—	—	—
64	—	—	—	P603	—	CTS9_RTS9/SS9	GTIOC7A/AGTIO4	—	—
65	—	—	—	P602	—	TXD9/MOSI9/SDA9	GTIOC7B/AGTO3	—	—
66	—	—	—	P601	—	RXD9/MISO9/SCL9	GTIOC6A/AGTEE3	—	—
67	—	—	CACREF/CLKOUT	P600	—	SCK9	GTIOC6B/AGTIO3	—	—
68	41	—	—	P107	—	—	AGTOA0	—	—
69	42	—	—	P106	—	—	AGTOB0	—	—
70	43	—	—	P105	IRQ0	—	GTETRGA/GTIOC1A/AGTO2	—	—
71	44	32	—	P104	IRQ1	QIO2	GTETRGB/GTIOC1B/AGTEE2	—	—
72	45	33	—	P103	—	CTS0_RTS0/SS0/CTX0/QIO3	GTOWUP/GTIOC2A/AGTIO2	—	—
73	46	34	—	P102	—	SCK0/CRX0/QIO0	GTOWLO/GTIOC2B/AGTO0	ADTRG0	—
74	47	35	—	P101	IRQ1	TXD0/MOSI0/SDA0/CTS1_RTS1/SS1/QIO1	GTETRGB/GTIOC5A/AGTEE0	—	—
75	48	36	—	P100	IRQ2	RXD0/MISO0/SCL0/SCK1/QSPCLK	GTETRGA/GTIOC5B/AGTIO0	—	—
76	49	37	CACREF	P500	—	USB_VBUSEN/QSPCLK	GTIU/AGTOA0	AN016	—
77	—	—	—	P501	IRQ11	USB_OVRCURA/QSSL	GTIV/AGTOB0	—	—
78	—	—	—	P502	IRQ12	USB_OVRCURB/QIO0	GTIW/AGTOA2	—	—
79	—	—	—	P503	—	USB_EXICEN/QIO1	GTETRGC/AGTOB2	—	—
80	—	—	—	P504	—	USB_ID/QIO2	GTETRGD/AGTOA3	—	—
81	—	—	—	P505	IRQ14	QIO3	AGTOB3	—	—
82	50	—	VCC	—	—	—	—	—	—
83	51	—	VSS	—	—	—	—	—	—
84	52	38	—	P015	IRQ13	—	—	AN013/DA1	—
85	53	39	—	P014	—	—	—	AN012/DA0	—
86	54	40	—	P013	—	—	—	AN011	—
87	55	41	VREFH	—	—	—	—	—	—
88	56	42	AVCC0	—	—	—	—	—	—
89	57	43	AVSS0/VREFL	—	—	—	—	—	—
90	58	44	VREFL0	—	—	—	—	—	—
91	59	45	VREFH0	—	—	—	—	—	—
92	—	—	—	P008	IRQ12-DS	—	—	AN008	—

RA生态工作室

Table 1.15 Pin list (3 of 3)

LQFP100	LQFP64	LQFP48, QFN48	Power, System, Clock, Debug, CAC	I/O ports	Ex. Interrupt	SCI/IIC/SPI/CAN/USBFS/QSPI/SSIE/SDHI/MMC	GPT/AGT/RTC	ADC12/DAC12	CTSU
93	—	—	—	P007	—	—	—	AN007	—
94	—	—	—	P006	IRQ11-DS	—	—	AN006	—
95	—	—	—	P005	IRQ10-DS	—	—	AN005	—
96	60	—	—	P004	IRQ9-DS	—	—	AN004	—
97	61	—	—	P003	—	—	—	AN003	—
98	62	46	—	P002	IRQ8-DS	—	—	AN002	—
99	63	47	—	P001	IRQ7-DS	—	—	AN001	—
100	64	48	—	P000	IRQ6-DS	—	—	AN000	—

Note: Several pin names have the added suffix of _A, _B, and _C. The suffix can be ignored when assigning functionality.

Table 1.15 引脚列表（3个中的3个）

LQFP100	LQFP64	LQFP48, QFN48	电源、系统、时钟、调试、CAC	I/O ports	前任。打断	SCI/IIC/SPI/CAN/USBFS/QSPI/SSIE/SDHI/MMC	GPT/AGT/RTC	ADC12/DAC12	CTSU
93	—	—	—	P007	—	—	—	AN007	—
94	—	—	—	P006	IRQ11-DS	—	—	AN006	—
95	—	—	—	P005	IRQ10-DS	—	—	AN005	—
96	60	—	—	P004	IRQ9-DS	—	—	AN004	—
97	61	—	—	P003	—	—	—	AN003	—
98	62	46	—	P002	IRQ8-DS	—	—	AN002	—
99	63	47	—	P001	IRQ7-DS	—	—	AN001	—
100	64	48	—	P000	IRQ6-DS	—	—	AN000	—

Note: 几个引脚名称添加了_A、_B和_C的后缀。分配功能时可以忽略后缀。

RA生态工作室

2. Electrical Characteristics

Supported peripheral functions and pins differ from one product name to another.

Unless otherwise specified, the electrical characteristics of the MCU are defined under the following conditions:

- VCC = AVCC0 = VCC_USB = VBATT = 2.7 to 3.6 V
- 2.7 ≤ VREFH0/VREFH ≤ AVCC0
- VSS = AVSS0 = VREFL0/VREFL = VSS_USB = 0 V
- $T_a = T_{opr}$

Figure 2.1 shows the timing conditions.

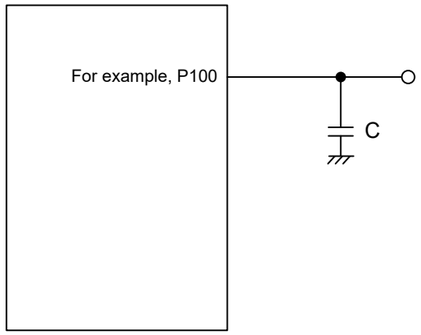

V_{OH} = VCC × 0.7, V_{OL} = VCC × 0.3
V_{IH} = VCC × 0.7, V_{IL} = VCC × 0.3
Load capacitance C = 30 pF

Figure 2.1 Input or output timing measurement conditions

The recommended measurement conditions for the timing specification of each peripheral provided are for the best peripheral operation. Make sure to adjust the driving abilities of each pin to meet your conditions.

2.1 Absolute Maximum Ratings

Table 2.1 Absolute maximum ratings

Parameter	Symbol	Value	Unit
Power supply voltage	VCC, VCC_USB*2	–0.3 to +4.0	V
VBATT power supply voltage	VBATT	–0.3 to +4.0	V
Input voltage (except for 5 V-tolerant ports*1)	V_{in}	–0.3 to VCC + 0.3	V
Input voltage (5 V-tolerant ports*1)	V_{in}	–0.3 to + VCC + 4.0 (max. 5.8)	V
Reference power supply voltage	VREFH/VREFH0	–0.3 to VCC + 0.3	V
Analog power supply voltage	AVCC0*2	–0.3 to +4.0	V
Analog input voltage	V_{AN}	–0.3 to AVCC0 + 0.3	V
Operating temperature*3 *4	T_{opr}	–40 to +105	°C
Storage temperature	T_{stg}	–55 to +125	°C

Note 1. Ports P205, P206, P400, P401, P407 to P415, and P708 are 5 V tolerant.
Note 2. Connect AVCC0 and VCC_USB to VCC.
Note 3. See section 2.2.1. Tj/Ta Definition.
Note 4. Contact a Renesas Electronics sales office for information on derating operation when Ta = +85°C to +105°C. Derating is the systematic reduction of load for improved reliability.

2. 电气特性

支持的外围功能和引脚因产品名称而异。

除非另有规定，MCU的电气特性在以下条件下定义：

- VCC = AVCC0 = VCC_USB = VBATT = 2.7 to 3.6 V
- 2.7 ≤ VREFH0/VREFH ≤ AVCC0
- VSS = AVSS0 = VREFL0/VREFL = VSS_USB = 0 V
- $T_a = T_{opr}$

图2.1显示了时序条件。

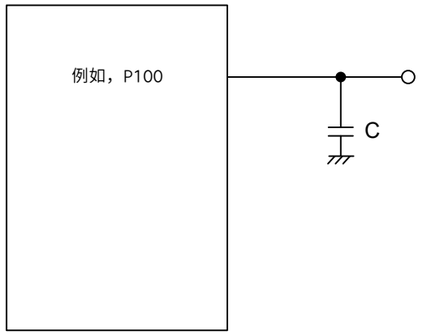

VOH=VCC×0.7，VOL=VCC×0.3
VIH=VCC×0.7，VIL=VCC×0.3
负载电容C=30pF

Figure 2.1 输入或输出定时测量条件

所提供的每个外设时序规范的推荐测量条件是为了实现最佳外设操作。确保调整每个引脚的驱动能力以满足您的条件。

2.1 绝对最大额定值

Table 2.1 绝对最大额定值

Parameter	Symbol	Value	Unit
电源电压	VCC, VCC_USB*2	–0.3 to +4.0	V
VBATT电源电压	VBATT	–0.3 to +4.0	V
输入电压（5V容限端口*1除外）	V_{in}	–0.3 to VCC + 0.3	V
输入电压（5V耐压端口*1）	V_{in}	–0.3 to + VCC + 4.0 (max. 5.8)	V
参考电源电压	VREFH/VREFH0	–0.3 to VCC + 0.3	V
模拟电源电压	AVCC0*2	–0.3 to +4.0	V
模拟输入电压	V_{AN}	–0.3 to AVCC0 + 0.3	V
工作温度*3*4	T_{opr}	–40 to +105	°C
贮存温度	T_{stg}	–55 to +125	°C

注1.端口P205、P206、P400、P401、P407至P415和P708可承受5V电压。
注2.将AVCC0和VCC_USB连接到VCC。
注3：见第2.2.1节。TjTa定义。
注4.有关在Ta=+85°C至+105°C时降额运行的信息，请联系瑞萨电子销售办事处。降额是系统地减少负载以提高可靠性。

RA生态工作室

Caution: Permanent damage to the MCU might result if absolute maximum ratings are exceeded.

Table 2.2 Recommended operating conditions

Parameter	Symbol	Value	Min	Typ	Max	Unit
Power supply voltages	VCC	When USB is not used	2.7	—	3.6	V
		When USB is used	3.0	—	3.6	V
	VSS		—	0	—	V
USB power supply voltages	VCC_USB		—	VCC	—	V
	VSS_USB		—	0	—	V
VBATT power supply voltage	VBATT		1.8	—	3.6	V
Analog power supply voltages	AVCC0*1		—	VCC	—	V
	AVSS0		—	0	—	V

Note 1. Connect AVCC0 to VCC. When the A/D converter and the D/A converter are not in use, do not leave the AVCC0, VREFH/VREFH0, AVSS0, and VREFL/VREFL0 pins open. Connect the AVCC0 and VREFH/VREFH0 pins to VCC, and the AVSS0 and VREFL/VREFL0 pins to VSS, respectively.

2.2 DC Characteristics

2.2.1 Tj/Ta Definition

Table 2.3 DC characteristics

Conditions: Products with operating temperature (T_a) -40 to +105°C

Parameter		Symbol	Typ	Max	Unit	Test conditions
Permissible junction temperature	100-pin LQFP 64-pin LQFP 48-pin LQFP	T_j	—	125	°C	High-speed mode Low-speed mode Subosc-speed mode
	48-pin QFN			115		

Note: Make sure that $T_j = T_a + \theta ja \times$ total power consumption (W), where total power consumption = $(VCC - V_{OH}) \times \Sigma I_{OH} + V_{OL} \times \Sigma I_{OL} + I_{CC}max \times VCC$.

2.2.2 I/O V_{IH}, V_{IL}

Table 2.4 I/O V_{IH}, V_{IL} (1 of 2)

Parameter			Symbol	Min	Typ	Max	Unit
Input voltage (except for Schmitt trigger input pins)	Peripheral function pin	EXTAL (external clock input), SPI (except RSPCK)	V_{IH}	VCC × 0.8	—	—	V
			V_{IL}	—	—	VCC × 0.2	
		IIC (SMBus)	V_{IH}	2.1	—	VCC + 3.6 (max 5.8)	
			V_{IL}	—	—	0.8	

Caution: 如果超过绝对最大额定值，可能会对MCU造成永久性损坏。

Table 2.2 推荐工作条件

Parameter	Symbol	Value	Min	Typ	Max	Unit
电源电压	VCC	不使用USB时	2.7	—	3.6	V
		使用USB时	3.0	—	3.6	V
	VSS		—	0	—	V
USB电源电压	VCC_USB		—	VCC	—	V
	VSS_USB		—	0	—	V
VBATT电源电压	VBATT		1.8	—	3.6	V
模拟电源电压	AVCC0*1		—	VCC	—	V
	AVSS0		—	0	—	V

注1.将AVCC0连接到VCC。不使用AD转换器和DA转换器时，不要离开AVCC0、VREFHVREFH0、AVSS0和VREFLVREFL0引脚打开。将AVCC0和VREFHVREFH0引脚连接到VCC，以及AVSS0和VREFLVREFL0引脚分别连接到VSS。

2.2 DC Characteristics

2.2.1 Tj/Ta Definition

Table 2.3 DC characteristics

条件：工作温度(Ta)-40至+105°C的产品

Parameter		Symbol	Typ	Max	Unit	测试条件
允许结温	100-pin LQFP 64-pin LQFP 48-pin LQFP	T_j	—	125	°C	High-speed mode Low-speed mode Subosc-speed mode
	48-pin QFN			115		

Note: 确保Tj=Ta+θja×总功耗(W)，其中总功耗=(VCCVOH)×ΣIOH+VOL×ΣIOL+$I_{CC}max \times VCC$.

2.2.2 I O V I H

Table 2.4 IOVIH VIL(1of2)

Parameter			符号最小值		Typ	Max	Unit
输入电压（施密特触发器输入引脚除外）	外设功能引脚	EXTAL（外部时钟输入），SPI（RSPCK除外）	V_{IH}	VCC × 0.8	—	—	V
			V_{IL}	—	—	VCC × 0.2	
		IIC (SMBus)	V_{IH}	2.1	—	VCC + 3.6 (max 5.8)	
			V_{IL}	—	—	0.8	

RA生态工作室

Table 2.4 I/O V_{IH}, V_{IL} (2 of 2)

Parameter					Symbol	Min	Typ	Max	Unit
Schmitt trigger input voltage	Peripheral function pin	IIC (except for SMBus)			V_{IH}	VCC × 0.7	—	VCC + 3.6 (max 5.8)	V
					V_{IL}	—	—	VCC × 0.3	
					ΔV_T	VCC × 0.05	—	—	
		5 V-tolerant ports*1 *5			V_{IH}	VCC × 0.8	—	VCC + 3.6 (max 5.8)	
					V_{IL}	—	—	VCC × 0.2	
					ΔV_T	VCC × 0.05	—	—	
		RTCIC0, RTCIC1, RTCIC2	When using the Battery Backup Function	When VBATT power supply is selected	V_{IH}	V_{BATT} × 0.8	—	V_{BATT} + 0.3	
					V_{IL}	—	—	V_{BATT} × 0.2	
					ΔV_T	V_{BATT} × 0.05	—	—	
				When VCC power supply is selected	V_{IH}	VCC × 0.8	—	Higher voltage either VCC + 0.3 V or V_{BATT} + 0.3 V	
					V_{IL}	—	—	VCC × 0.2	
					ΔV_T	VCC × 0.05	—	—	
			When not using the Battery Backup Function		V_{IH}	VCC × 0.8	—	VCC + 0.3	
					V_{IL}	—	—	VCC × 0.2	
					ΔV_T	VCC × 0.05	—	—	
		Other input pins*2			V_{IH}	VCC × 0.8	—	—	
					V_{IL}	—	—	VCC × 0.2	
					ΔV_T	VCC × 0.05	—	—	
	Ports	5 V-tolerant ports*3 *5			V_{IH}	VCC × 0.8	—	VCC + 3.6 (max 5.8)	V
					V_{IL}	—	—	VCC × 0.2	
		Other input pins*4			V_{IH}	VCC × 0.8	—	—	
					V_{IL}	—	—	VCC × 0.2	

Note 1. RES and peripheral function pins associated with Ports P205, P206, P400, P401, P407 to P415, and P708（total 15 pins).
Note 2. All input pins except for the peripheral function pins already described in the table.
Note 3. Ports P205, P206, P400, P401, P407 to P415, and P708（total 14 pins).
Note 4. All input pins except for the ports already described in the table.
Note 5. When VCC is less than 2.7 V, the input voltage of 5 V-tolerant ports should be less than 3.6 V, otherwise breakdown may occur because 5 V-tolerant ports are electrically controlled so as not to violate the break down voltage.

Table 2.4 IOVIH VIL(2of2)

Parameter					符号最小值		Typ	Max	Unit
施密特触发器输入电压	外设功能引脚	IIC (except for SMBus)			V_{IH}	VCC × 0.7	—	VCC + 3.6 (max 5.8)	V
					V_{IL}	—	—	VCC × 0.3	
					ΔV_T	VCC × 0.05	—	—	
		5 V-tolerant ports*1 *5			V_{IH}	VCC × 0.8	—	VCC + 3.6 (max 5.8)	
					V_{IL}	—	—	VCC × 0.2	
					ΔV_T	VCC × 0.05	—	—	
		RTCIC0, RTCIC1, RTCIC2	使用备用电池时 Function	选择VBATT电源时	V_{IH}	V_{BATT} × 0.8	—	V_{BATT} + 0.3	
					V_{IL}	—	—	V_{BATT} × 0.2	
					ΔV_T	V_{BATT} × 0.05	—	—	
				选择VCC电源时	V_{IH}	VCC × 0.8	—	更高的电压 VCC+0.3V或 VBATT+0.3 V	
					V_{IL}	—	—	VCC × 0.2	
					ΔV_T	VCC × 0.05	—	—	
			不使用备用电池时 Function		V_{IH}	VCC × 0.8	—	VCC + 0.3	
					V_{IL}	—	—	VCC × 0.2	
					ΔV_T	VCC × 0.05	—	—	
		其他输入引脚*2			V_{IH}	VCC × 0.8	—	—	
					V_{IL}	—	—	VCC × 0.2	
					ΔV_T	VCC × 0.05	—	—	
	Ports	5 V-tolerant ports*3 *5			V_{IH}	VCC × 0.8	—	VCC + 3.6 (max 5.8)	V
					V_{IL}	—	—	VCC × 0.2	
		其他输入引脚*4			V_{IH}	VCC × 0.8	—	—	
					V_{IL}	—	—	VCC × 0.2	

注1.与端口P205、P206、P400、P401、P407至P415和P708相关的RES和外围功能引脚（共15个引脚）。
注2.除表中已描述的外围功能引脚外的所有输入引脚。
注3.端口P205、P206、P400、P401、P407～P415、P708（共14针）。
注4.除表中已描述的端口外的所有输入引脚。
注5.当VCC小于2.7V时，5V容限端口的输入电压应小于3.6V，否则可能发生击穿，因为5V容限端口是电气控制的，以免违反击穿电压。

RA生态工作室

2.2.3 I/O I_{OH}, I_{OL}

Table 2.5 I/O I_{OH}, I_{OL}

Parameter			Symbol	Min	Typ	Max	Unit
Permissible output current (average value per pin)	Ports P000 to P008, P013 to P015, P201	—	I_{OH}	—	—	–2.0	mA
			I_{OL}	—	—	2.0	mA
	Ports P205, P206, P407 to P415, P708 (total 12 pins)	Low drive*1	I_{OH}	—	—	–2.0	mA
			I_{OL}	—	—	2.0	mA
		Middle drive*2	I_{OH}	—	—	–4.0	mA
			I_{OL}	—	—	4.0	mA
		High drive*3	I_{OH}	—	—	–20	mA
			I_{OL}	—	—	20	mA
	Other output pins*4	Low drive*1	I_{OH}	—	—	–2.0	mA
			I_{OL}	—	—	2.0	mA
		Middle drive*2	I_{OH}	—	—	–4.0	mA
			I_{OL}	—	—	4.0	mA
		High drive*3	I_{OH}	—	—	–16	mA
			I_{OL}	—	—	16	mA
Permissible output current (max value per pin)	Ports P000 to P008, P013 to P015, P201	—	I_{OH}	—	—	–4.0	mA
			I_{OL}	—	—	4.0	mA
	Ports P205, P206, P407 to P415, P708 (total 12 pins)	Low drive*1	I_{OH}	—	—	–4.0	mA
			I_{OL}	—	—	4.0	mA
		Middle drive*2	I_{OH}	—	—	–8.0	mA
			I_{OL}	—	—	8.0	mA
		High drive*3	I_{OH}	—	—	–40	mA
			I_{OL}	—	—	40	mA
	Other output pins*4	Low drive*1	I_{OH}	—	—	–4.0	mA
			I_{OL}	—	—	4.0	mA
		Middle drive*2	I_{OH}	—	—	–8.0	mA
			I_{OL}	—	—	8.0	mA
		High drive*3	I_{OH}	—	—	–32	mA
			I_{OL}	—	—	32	mA
Permissible output current (maxvalue of total of all pins)	Maximum of all output pins		$\Sigma I_{OH\ (max)}$	—	—	–80	mA
			$\Sigma I_{OL\ (max)}$	—	—	80	mA

Note 1. This is the value when low driving ability is selected in the Port Drive Capability bit in the PmnPFS register. The selected driving ability is retained in Deep Software Standby mode.
Note 2. This is the value when middle driving ability is selected in the Port Drive Capability bit in the PmnPFS register. The selected driving ability is retained in Deep Software Standby mode.
Note 3. This is the value when high driving ability is selected in the Port Drive Capability bit in the PmnPFS register. The selected driving ability is retained in Deep Software Standby mode.
Note 4. Except for P200, which is an input port.

Caution: To protect the reliability of the MCU, the output current values should not exceed the values in this table. The average output current indicates the average value of current measured during 100 µs.

2.2.3 我爱我哦

Table 2.5 我爱我哦

Parameter			Symbol	最小值	典型值	最大值	单位
允许输出电流（每个引脚的平均值）	端口P000至P008、P013至P015、P201	—	I_{OH}	—	—	–2.0	mA
			I_{OL}	—	—	2.0	mA
	端口P205、P206、P407至P415、P708（共12个引脚）	低驱动*1	I_{OH}	—	—	–2.0	mA
			I_{OL}	—	—	2.0	mA
		中间驱动器*2	IOH	—	—	–4.0	mA
			I_{OL}	—	—	4.0	mA
		高速驱动*3	I_{OH}	—	—	–20	mA
			I_{OL}	—	—	20	mA
	其他输出引脚*4	低驱动*1	I_{OH}	—	—	–2.0	mA
			I_{OL}	—	—	2.0	mA
		中间驱动器*2	IOH	—	—	–4.0	mA
			I_{OL}	—	—	4.0	mA
		高速驱动*3	I_{OH}	—	—	–16	mA
			I_{OL}	—	—	16	mA
允许输出电流（每个引脚的最大值）	端口P000至P008、P013至P015、P201	—	I_{OH}	—	—	–4.0	mA
			I_{OL}	—	—	4.0	mA
	端口P205、P206、P407至P415、P708（共12个引脚）	低驱动*1	I_{OH}	—	—	–4.0	mA
			I_{OL}	—	—	4.0	mA
		中间驱动器*2	IOH	—	—	–8.0	mA
			I_{OL}	—	—	8.0	mA
		高速驱动*3	I_{OH}	—	—	–40	mA
			I_{OL}	—	—	40	mA
	其他输出引脚*4	低驱动*1	I_{OH}	—	—	–4.0	mA
			I_{OL}	—	—	4.0	mA
		中间驱动器*2	IOH	—	—	–8.0	mA
			I_{OL}	—	—	8.0	mA
		高速驱动*3	I_{OH}	—	—	–32	mA
			I_{OL}	—	—	32	mA
允许输出电流（所有引脚总和的最大值）	所有输出引脚的最大值		$\Sigma I_{OH\ (max)}$	—	—	–80	mA
			$\Sigma I_{OL\ (max)}$	—	—	80	mA

注1.这是在PmnPFS寄存器的端口驱动能力位中选择低驱动能力时的值。在深度软件待机模式下会保留所选的驾驶能力。

注2.这是在PmnPFS寄存器的端口驱动能力位中选择中等驱动能力时的值。在深度软件待机模式下会保留所选的驾驶能力。

注3.这是在PmnPFS寄存器的端口驱动能力位中选择高驱动能力时的值。在深度软件待机模式下会保留所选的驾驶能力。

注4.P200除外，它是一个输入端口。

Caution: 为保护单片机的可靠性，输出电流值不应超过此表中的值。平均输出电流表示在100µs期间测量的电流平均值。

RA生态工作室

2.2.4 I/O V_{OH}, V_{OL}, and Other Characteristics

Table 2.6 I/O V_{OH}, V_{OL}, and other characteristics

Parameter		Symbol	Min	Typ	Max	Unit	Test conditions
Output voltage	IIC	V_{OL}	—	—	0.4	V	I_{OL} = 3.0 mA
		V_{OL}	—	—	0.6		I_{OL} = 6.0 mA
	IIC*1	V_{OL}	—	—	0.4		I_{OL} = 15.0 mA (ICFER.FMPE = 1)
		V_{OL}	—	0.4	—		I_{OL} = 20.0 mA (ICFER.FMPE = 1)
	Ports P205, P206, P407 to P415, P708 (total 12 pins)*2	V_{OH}	VCC – 1.0	—	—		I_{OH} = –20 mA VCC = 3.3 V
		V_{OL}	—	—	1.0		I_{OL} = 20 mA VCC = 3.3 V
	Other output pins	V_{OH}	VCC – 0.5	—	—		I_{OH} = –1.0 mA
		V_{OL}	—	—	0.5		I_{OL} = 1.0 mA
Input leakage current	RES	$\|I_{in}\|$	—	—	5.0	μA	V_{in} = 0 V V_{in} = 5.5 V
	Port P200		—	—	1.0		V_{in} = 0 V V_{in} = VCC
Three-state leakage current (off state)	5 V-tolerant ports	$\|I_{TSI}\|$	—	—	5.0	μA	V_{in} = 0 V V_{in} = 5.5 V
	Other ports (except for port P200)		—	—	1.0		V_{in} = 0 V V_{in} = VCC
Input pull-up MOS current	Ports P0 to P7	I_p	–300	—	–10	μA	VCC = 2.7 to 3.6 V V_{in} = 0 V
Input capacitance	USB_DP, USB_DM, and ports P014, P015, P400, P401	C_{in}	—	—	16	pF	Vbias = 0 V Vamp = 20 mV f = 1 MHz Ta = 25°C
	Other input pins		—	—	8		

Note 1. SCL0_A, SDA0_A (total 2 pins).
Note 2. This is the value when high driving ability is selected in the Port Drive Capability bit in the PmnPFS register.
The selected driving ability is retained in Deep Software Standby mode.

2.2.4 IOVOH VOL和其他特性

Table 2.6 IOVOH、VOL和其他特性

Parameter		符号最小值		典型最大单元测试条件			
输出电压	IIC	V_{OL}	—	—	0.4	V	我OL=3.0毫安
		V_{OL}	—	—	0.6		我OL=6.0毫安
	IIC*1	V_{OL}	—	—	0.4		IOL=15.0mA(ICFER.FMPE=1)
		V_{OL}	—	0.4	—		IOL=20.0mA(ICFER.FMPE=1)
	端口P205、P206、P407至P415、P708（共12针）*2	V_{OH}	VCC – 1.0	—	—		IOH= 20mAV CC=3.3V
		V_{OL}	—	—	1.0		我OL=20毫 安VCC=3.3V
	其他输出引脚	V_{OH}	VCC – 0.5	—	—		IOH= 1.0毫安
		V_{OL}	—	—	0.5		我OL=1.0毫安
输入漏电流	RES	$\|I_{in}\|$	—	—	5.0	μA	V_{in} = 0 V V_{in} = 5.5 V
	Port P200		—	—	1.0		V_{in} = 0 V V_{in} = VCC
三态漏电流（关闭状态）	5 V-tolerant ports	$\|I_{TSI}\|$	—	—	5.0	μA	V_{in} = 0 V V_{in} = 5.5 V
	其他港口（港口除外）P200)		—	—	1.0		V_{in} = 0 V V_{in} = VCC
输入上拉MOS电流	端口P0至P7	I_p	–300	—	–10	μA	VCC = 2.7 to 3.6 V V_{in} = 0 V
输入电容	USB_DP、USB_DM和端口P014, P015, P400, P401	C_{in}	—	—	16	pF	Vbias = 0 V Vamp=20mVf =1MHzTa=25° C
	其他输入引脚		—	—	8		

Note 1. SCL0_A, SDA0_A (total 2 pins).
注2.这是在PmnPFS寄存器的端口驱动能力位中选择高驱动能力时的值。
在深度软件待机模式下会保留所选的驾驶能力。

RA生态工作室

2.2.5 Operating and Standby Current

Table 2.7 Operating and standby current (1 of 2)

Parameter				Symbol	Min	Typ	Max	Unit	Test conditions
Supply current*1	High-speed mode	Maximum*2 *13		I_{CC}*3	—	—	65	mA	ICLK = 100 MHz PCLKA = 100 MHz PCLKB = 50 MHz PCLKC = 50 MHz PCLKD = 100 MHz FCLK = 50 MHz
		CoreMark®*5 *6 *12 *14			—	8.1	—		
		Normal mode	All peripheral clocks enabled, while (1) code executing from flash*4 *12		—	15.4	—		
			All peripheral clocks disabled, while (1) code executing from flash*5 *6 *12 *14		—	6.1	—		
		Sleep mode*5 *14			—	4.4*6 *12	25*7 *13		
		Increase during BGO operation	Data flash P/E		—	6	—		
			Code flash P/E		—	8	—		
	Low-speed mode*5 *10				—	0.8	—		ICLK = 1 MHz
	Subosc-speed mode*5 *11				—	0.7	—		ICLK = 32.768 kHz
	Software Standby mode		SNZCR.RXDREQEN = 1		—	—	14		—
			SNZCR.RXDREQEN = 0		—	0.7	—		—
	Deep Software Standby mode	Power supplied to Standby SRAM and USB resume detecting unit			—	16	96	μA	—
		Power not supplied to SRAM or USB resume detecting unit	Power-on reset circuit low power function disabled		—	12	27		—
			Power-on reset circuit low power function enabled		—	5	17		—
		Increase when the RTC and AGT are operating	When the low-speed on-chip oscillator (LOCO) is in use		—	4.4	—		—
			When a crystal oscillator for low clock loads is in use		—	1.0	—		—
			When a crystal oscillator for standard clock loads is in use		—	1.6	—		—
	RTC operating while VCC is off (with the battery backup function, only the RTC and sub-clock oscillator operate)		When a crystal oscillator for low clock loads is in use		—	0.6	—		V_{BATT} = 1.8 V, VCC = 0 V
					—	1.2	—		V_{BATT} = 3.3 V, VCC = 0 V
			When a crystal oscillator for standard clock loads is in use		—	1.1	—		V_{BATT} = 1.8 V, VCC = 0 V
					—	1.8	—		V_{BATT} = 3.3 V, VCC = 0 V
	Inrush current on returning from deep software standby mode		Inrush current*8	I_{RUSH}	—	160	—	mA	
			Energy of inrush current*8	E_{RUSH}	—	1.0	—	μC	

2.2.5 工作和待机电流

Table 2.7 工作和待机电流(1of2)

Parameter				Symbol	Min	Typ	Max	单元	测试条件
供电电流*1	High-speed mode	Maximum*2 *13		I_{CC}*3	—	—	65	mA	ICLK = 100 MHz PCLKA = 100 MHz PCLKB = 50 MHz PCLKC = 50 MHz PCLKD = 100 MHz FCLK = 50 MHz
		CoreMark®*5 *6 *12 *14			—	8.1	—		
		正常模式	启用所有外设时钟，同时(1)从闪存执行代码*4*12		—	15.4	—		
			禁用所有外设时钟，同时(1)代码从闪存执行*5*6*12*14		—	6.1	—		
		睡眠模式*5*14			—	4.4*6 *12	25*7 *13		
		BGO运行期间增加	数据闪存PE		—	6	—		
			代码闪存PE		—	8	—		
	Low-speed mode*5 *10				—	0.8	—		ICLK = 1 MHz
	Subosc-speed mode*5 *11				—	0.7	—		ICLK = 32.768 kHz
	软件待机模式		SNZCR.RXDREQEN = 1		—	—	14		—
			SNZCR.RXDREQEN = 0		—	0.7	—		—
	Deep 软件待机模式	为备用SRAM和USB恢复检测单元供电			—	16	96	μA	—
		未向SRAM或USB恢复检测单元供电	上电复位电路低功耗功能禁用		—	12	27		—
			上电复位电路低功耗功能启用		—	5	17		—
		RTC和AGT运行时增加	使用低速片上振荡器(LOCO)时		—	4.4	—		—
			当使用用于低时钟负载的晶体振荡器时		—	1.0	—		—
			当使用标准时钟负载的晶体振荡器时		—	1.6	—		—
	VCC关闭时RTC运行（具有电池备份功能，只有RTC和副时钟振荡器运行）		当使用用于低时钟负载的晶体振荡器时		—	0.6	—		V_{BATT} = 1.8 V, VCC = 0 V
					—	1.2	—		V_{BATT} = 3.3 V, VCC = 0 V
			当使用标准时钟负载的晶体振荡器时		—	1.1	—		V_{BATT} = 1.8 V, VCC = 0 V
					—	1.8	—		V_{BATT} = 3.3 V, VCC = 0 V
	从深度软件待机模式返回时的浪涌电流		Inrush current*8	I_{RUSH}	—	160	—	mA	
			浪涌电流能量*8	E_{RUSH}	—	1.0	—	μC	

RA生态工作室

Table 2.7 Operating and standby current (2 of 2)

Parameter			Symbol	Min	Typ	Max	Unit	Test conditions
Analog power supply current	During 12-bit A/D conversion		AI_{CC}	—	0.8	1.1	mA	—
	Temperature sensor			—	0.1	0.2	mA	—
	During D/A conversion (per unit)	Without AMP output		—	0.1	0.2	mA	—
		With AMP output		—	0.6	1.1	mA	—
	Waiting for A/D, D/A conversion (all units)			—	0.5	1.0	mA	—
	ADC12, DAC12 in standby modes (all units)*9			—	0.4	4.0	μA	—
Reference power supply current (VREFH0)	During 12-bit A/D conversion (unit 0)		AI_{REFH0}	—	70	120	μA	—
	Waiting for 12-bit A/D conversion (unit 0)			—	0.07	0.5	μA	—
	ADC12 in standby modes (unit 0)			—	0.07	0.5	μA	—
Reference power supply current (VREFH)	During D/A conversion (per unit)	Without AMP output	AI_{REFH}	—	0.1	0.4	mA	—
		With AMP ouput		—	0.1	0.4	mA	—
	Waiting for D/A (all units) conversion			—	0.07	0.8	μA	—
USB operating current	Low speed	USB	$I_{CCUSBLS}$	—	3.5	6.5	mA	VCC_USB
	Full speed	USB	$I_{CCUSBFS}$	—	4.0	10.0	mA	VCC_USB
LDOn operating current (1 unit)*15			I_{CCLDO}	—	0.18	—	mA	—
PLL2-LDO operating current			$I_{CCPLL2LDO}$	—	0.21	—	mA	—

Note 1. Supply current values are with all output pins unloaded and all input pull-up MOSs in the off state.
Note 2. Measured with clocks supplied to the peripheral functions. This does not include the BGO operation.
Note 3. I_{CC} depends on f (ICLK) as follows.
I_{CC} Max. = 0.53 × f + 12 (max. operation in high-speed mode)
I_{CC} Typ. = 0.05 × f + 1.85 (normal operation in high-speed mode, all peripheral clocks disabled)
I_{CC} Typ. = 0.12 × f + 0.69 (low-speed mode)
I_{CC} Max. = 0.13 × f + 12 (sleep mode)
Note 4. This does not include the BGO operation.
Note 5. Supply of the clock signal to peripherals is stopped in this state. This does not include the BGO operation.
Note 6. FCLK, PCLKA, PCLKB, PCLKC, and PCLKD are set to divided by 64 (1.563 MHz).
Note 7. FCLK, PCLKA, PCLKB, PCLKC, and PCLKD are set to divided by 64 (3.125 MHz).
Note 8. Reference value
Note 9. When the MCU is in Software Standby mode or the MSTPCRD.MSTPD16 (12-Bit A/D Converter 0 Module Stop bit) is in the module-stop state.
Note 10. FCLK, PCLKA, PCLKB, PCLKC, and PCLKD are set to divided by 64 (15.6 kHz).
Note 11. PCLKA, PCLKB, PCLKC, and PCLKD are set to divided by 64 (512 Hz). FCLK is the same frequency as that of ICLK.
Note 12. PLL output frequency = 100MHz.
Note 13. PLL output frequency = 200MHz.
Note 14. PLL2-LDO disabled.
Note 15. n = 0, 1

Table 2.7 工作和待机电流(2of2)

Parameter			Symbol	Min	Typ	Max	单元	测试条件
模拟电源电流	在12位AD转换期间		AI_{CC}	—	0.8	1.1	mA	—
	温度感应器			—	0.1	0.2	mA	—
	DA转换期间（每单位）	无AMP输出		—	0.1	0.2	mA	—
		带AMP输出		—	0.6	1.1	mA	—
	等待AD、DA转换（所有单位）			—	0.5	1.0	mA	—
	ADC12、DAC12处于待机模式（所有单元）*9			—	0.4	4.0	μA	—
参考电源电流(VREFH0)	在12位AD转换期间（单元0）		AI_{REFH0}	—	70	120	μA	—
	等待12位AD转换（单元0）			—	0.07	0.5	μA	—
	ADC12处于待机模式（单元0）			—	0.07	0.5	μA	—
参考电源电流(VREFH)	DA转换期间（每单位）	无AMP输出	AI_{REFH}	—	0.1	0.4	mA	—
		带AMP输出		—	0.1	0.4	mA	—
	等待DA（所有单位）转换			—	0.07	0.8	μA	—
USB工作电流	低速	USB	$I_{CCUSBLS}$	—	3.5	6.5	mA	VCC_USB
	全速	USB	$I_{CCUSBFS}$	—	4.0	10.0	mA	VCC_USB
LDOn工作电流（1个）*15			I_{CCLDO}	—	0.18	—	mA	—
PLL2-LDO工作电流			$I_{CCPLL2LDO}$	—	0.21	—	mA	—

注1.电源电流值是在所有输出引脚空载且所有输入上拉MOS处于关闭状态时的值。
注2.使用提供给外设功能的时钟测量。这不包括BGO操作。
注3.ICC取决于f(ICLK)，如下所示。
我CC最大。=0.53×f+12（高速模式下的最大操作）
我CC典型。=0.05×f+1.85（高速模式下正常运行，所有外设时钟禁用）
I_{CC} Typ. = 0.12 × f + 0.69 (low-speed mode)
I_{CC} Max. = 0.13 × f + 12 (sleep mode)
注4.这不包括BGO操作。
注5.在此状态下停止向外围设备提供时钟信号。这不包括BGO操作。
注6.FCLK、PCLKA、PCLKB、PCLKC和PCLKD设置为64分频(1.563MHz)。注7.FCLK、PCLKA、PCLKB、PCLKC和PCLKD设置为64分频(3.125MHz)。
注8.参考值
注9.当MCU处于软件待机模式或MSTPCRD.MSTPD16（12位AD转换器0模块停止位）处于模块停止状态时。

注10.FCLK、PCLKA、PCLKB、PCLKC和PCLKD设置为64分频（15.6kHz）。
注11.PCLKA、PCLKB、PCLKC和PCLKD设置为除以64(512Hz)。FCLK与ICLK的频率相同。
注12.PLL输出频率=100MHz。注13.PLL输出频率=200MHz。
注14.PLL2-LDO禁用。
Note 15. n = 0, 1

RA生态工作室

Table 2.8 Coremark and normal mode current

Parameter			Symbol	Typ	Unit	Test conditions
Supply Current*1	Coremark*2 *3 *4		I_{CC}	81	μA/MHz	ICLK = 100MHz PCLKA = PCLKB = PCLKC = PCLKD = FCLK = 1.56 MHz
	Normal mode	All peripheral clocks disabled, cache on, while (1) code executing from flash*2 *3 *4		60		
		All peripheral clocks disabled, cache off, while (1) code executing from flash*2 *3 *4		118		

Note 1. Supply current values are with all output pins unloaded and all input pull-up MOSs in the off state.
Note 2. Supply of the clock signal to peripherals is stopped in this state. This does not include the BGO operation.
Note 3. PLL output frequency = 100MHz.
Note 4. PLL2-LDO disabled.

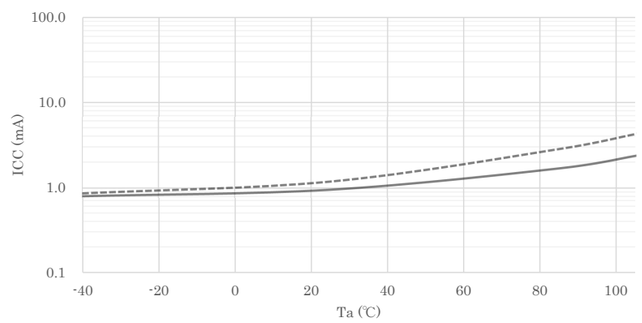

Average value of the tested middle samples during product evaluation.
Average value of the tested upper-limit samples during product evaluation.

Figure 2.2 Temperature dependency in Software Standby mode (reference data)

Table 2.8 Coremark和正常模式电流

Parameter			Symbol	Typ	Unit	测试条件
电源电流*1	Coremark*2 *3 *4		I_{CC}	81	μA/MHz	ICLK = 100MHz PCLKA = PCLKB = PCLKC = PCLKD = FCLK = 1.56 MHz
	正常模式	禁用所有外设时钟，开启缓存，同时(1)从闪存执行代码*2*3*4		60		
		所有外设时钟禁用，缓存关闭，同时(1)代码从闪存执行*2*3*4		118		

注1.电源电流值是在所有输出引脚空载且所有输入上拉MOS处于关闭状态时的值。
注2.在此状态下停止向外围设备提供时钟信号。这不包括BGO操作。
注3.PLL输出频率=100M
注4.PLL2-LDO禁用。

开发中初步文件
本文档中的规格是暂定的，可能会发生变化

59.电气特性

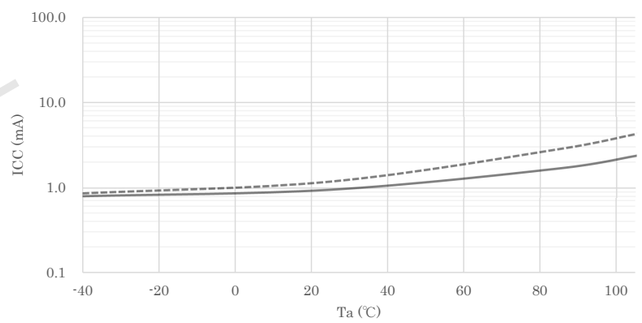

产品评价时被测中间样品的平均值。
产品评价时测试上限样品的平均值。

图47.2软件待机模式下的温度依赖性（参考数据）

Figure 2.2 软件待机模式下的温度依赖性（参考数据）

产品评价时被测中间样品的平均值。
产品评价时测试上限样品的平均值。

图47.3深度软件待机模式下的温度依赖性，电源供电至待机SRAM和USB恢复检测单元（参考数据）

RA生态工作室

xxxx 2019RA4M2目
标规范

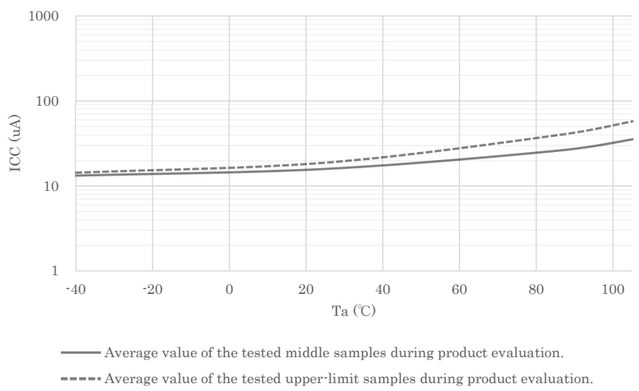

Figure 2.3 Temperature dependency in Deep Software Standby mode, power supplied to standby SRAM and USB resume detecting unit (reference data)

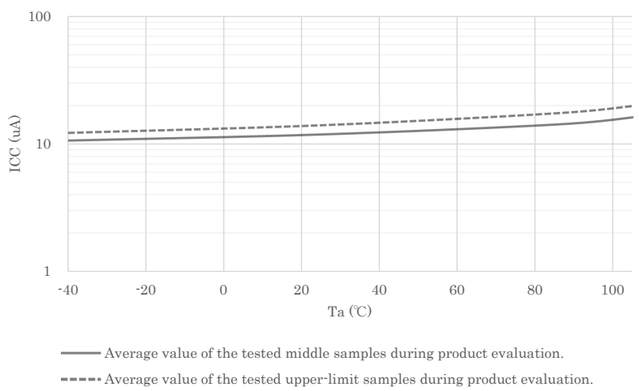

Figure 2.4 Temperature dependency in Deep Software Standby mode, power not supplied to SRAM or USB resume detecting unit, power-on reset circuit low power function disabled (reference data)

产品评价时被测中间样品的平均值。
产品评价时测试上限样品的平均值。

图47.2软件待机模式下的温度依赖性（参考数据）

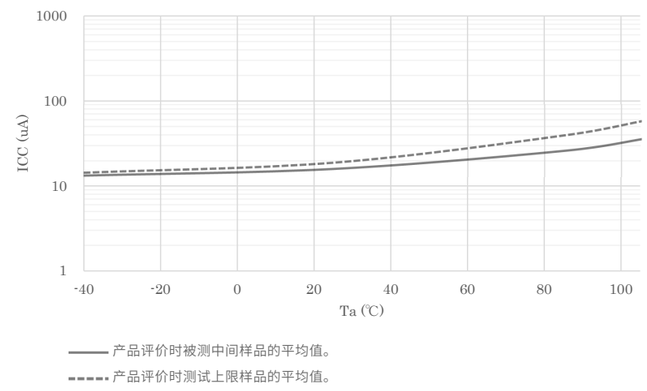

图47.3深度软件待机模式下的温度依赖性，电源供电至待机

Figure 2.3 深度软件待机模式下的温度依赖性、向待机SRAM和USB恢复检测单元供电（参考数据）开发中初步文档

本文档中的规格是暂定的，可能会发生变化

59.电气特性

RA生态工作室

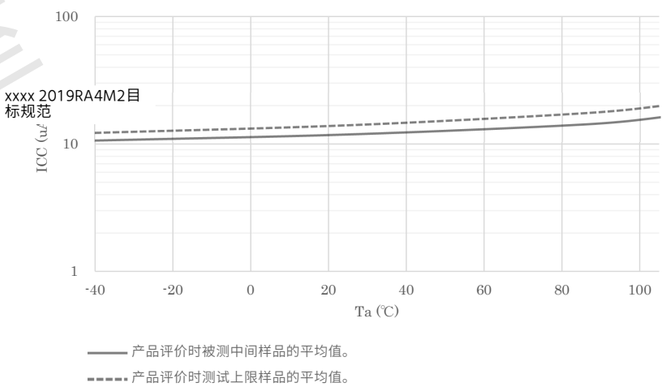

xxxx 2019RA4M2目标规范

图47.4深度软件待机模式下的温度依赖性，未向SRAM供电或

Figure 2.4 深度软件待机模式下的温度依赖性、未向SRAM或USB恢复检测单元供电、上电复位电路低功耗功能禁用（参考数据）

产品评价时被测中间样品的平均值。
产品评价时测试上限样品的平均值。

图47.5深度软件待机模式下的温度依赖性，未向SRAM供电或USB恢复检测单元，上电复位电路低功耗功能启用（参考数据）

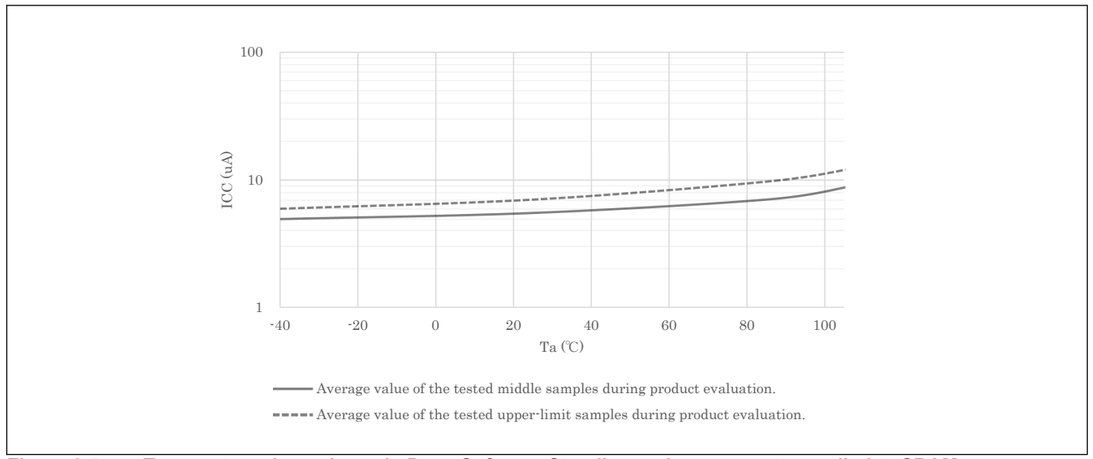

Figure 2.5 Temperature dependency in Deep Software Standby mode, power not supplied to SRAM or USB resume detecting unit, power-on reset circuit low power function enabled (reference data)

2.2.6 VCC Rise and Fall Gradient and Ripple Frequency

Table 2.9 Rise and fall gradient characteristics

Parameter		Symbol	Min	Typ	Max	Unit	Test conditions
VCC rising gradient	Voltage monitor 0 reset disabled at startup	SrVCC	0.0084	—	20	ms/V	—
	Voltage monitor 0 reset enabled at startup		0.0084	—	—		—
	SCI/USB boot mode*1		0.0084	—	20		—
VCC falling gradient*2		SfVCC	0.0084	—	—	ms/V	—

Note 1. At boot mode, the reset from voltage monitor 0 is disabled regardless of the value of the OFS1.LVDAS bit.
Note 2. This applies when VBATT is used.

Table 2.10 Rising and falling gradient and ripple frequency characteristics

The ripple voltage must meet the allowable ripple frequency $f_{r(VCC)}$ within the range between the VCC upper limit (3.6 V) and lower limit (2.7 V). When the VCC change exceeds VCC ±10%, the allowable voltage change rising and falling gradient dt/dVCC must be met.

Parameter	Symbol	Min	Typ	Max	Unit	Test conditions
Allowable ripple frequency	$f_{r(VCC)}$	—	—	10	kHz	Figure 2.6 $V_{r(VCC)} \leq VCC \times 0.2$
		—	—	1	MHz	Figure 2.6 $V_{r(VCC)} \leq VCC \times 0.08$
		—	—	10	MHz	Figure 2.6 $V_{r(VCC)} \leq VCC \times 0.06$
Allowable voltage change rising and falling gradient	dt/dVCC	1.0	—	—	ms/V	When VCC change exceeds VCC ±10%

产品评价时被测中间样品的平均值。
产品评价时测试上限样品的平均值。

图47.4深度软件待机模式下的温度依赖性，未向SRAM供电或USB恢复检测单元，上电复位电路低功耗功能禁用（参考数据）

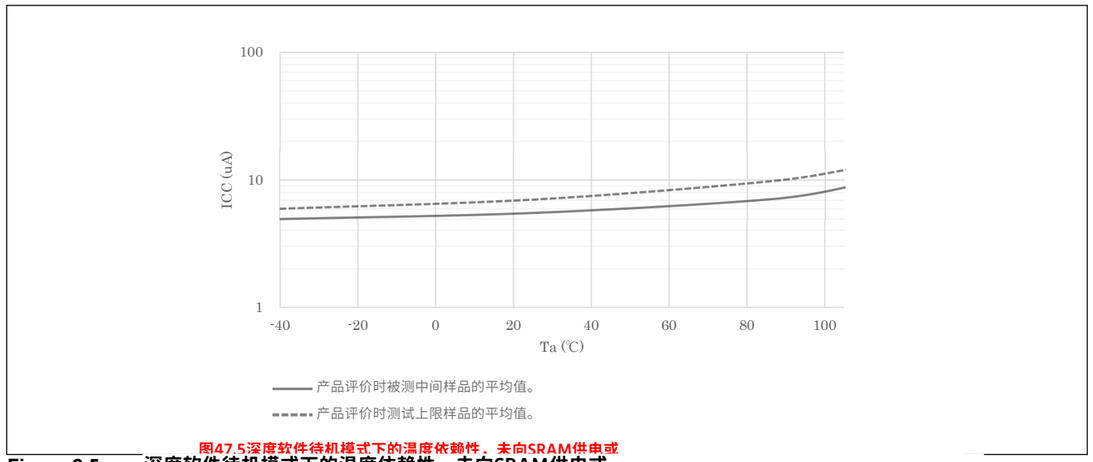

图47.5深度软件待机模式下的温度依赖性，未向SRAM供电或

Figure 2.5 深度软件待机模式下的温度依赖性，未向SRAM供电或USB恢复检测单元，上电复位电路低功耗功能启用（参考数据）

2.2.6 VCC上升和下降梯度和纹波频率

Table 2.9 上升和下降梯度特性

Parameter		Symbol	Min	Typ	Max	Unit	测试条件
VCC上升梯度	启动时禁用电压监视器0复位	SrVCC	0.0084	—	20	ms/V	—
	启动时启用电压监视器0复位		0.0084	—	—		—
	SCIUSB启动模式*1		0.0084	—	20		—
VCC下降梯度*2		SfVCC	0.0084	—	—	ms/V	—

注1.在引导模式下，无论OFS1.LVDAS位的值如何，都禁止从电压监视器0进行的复位。
注2.这适用于使用VBATT时。

Table 2.10 上升下降梯度和纹波频率特性

纹波电压必须在VCC上限(3.6V)和下限(2.7
五）。当VCC变化超过VCC±10%时，必须满足允许的电压变化上升和下降梯度dtdVCC。

Parameter	Symbol	Min	Typ	Max	Unit	测试条件
允许纹波频率	$f_{r(VCC)}$	—	—	10	kHz	Figure 2.6 $V_{r(VCC)} \leq VCC \times 0.2$
		—	—	1	MHz	Figure 2.6 $V_{r(VCC)} \leq VCC \times 0.08$
		—	—	10	MHz	Figure 2.6 $V_{r(VCC)} \leq VCC \times 0.06$
允许电压变化上升下降梯度	dt/dVCC	1.0	—	—	ms/V	当VCC变化超过VCC ±10%

RA生态工作室

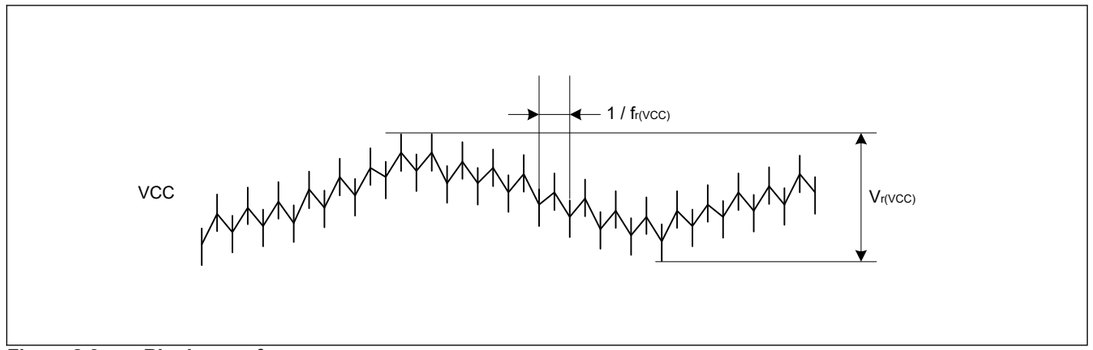

Figure 2.6 Ripple waveform

2.2.7 Thermal Characteristics

Maximum value of junction temperature (Tj) must not exceed the value of "section 2.2.1. Tj/Ta Definition".

Tj is calculated by either of the following equations.

- Tj = Ta + θja × Total power consumption
- Tj = Tt + Ψjt × Total power consumption
  - Tj : Junction Temperature (°C)
  - Ta : Ambient Temperature (°C)
  - Tt : Top Center Case Temperature (°C)
  - θja : Thermal Resistance of "Junction"-to-"Ambient" (°C/W)
  - Ψjt : Thermal Resistance of "Junction"-to-"Top Center Case" (°C/W)
- Total power consumption = Voltage × (Leakage current + Dynamic current)
- Leakage current of IO = Σ (I_{OL} × V_{OL}) /Voltage + Σ (|I_{OH}| × |VCC – V_{OH}|) /Voltage
- Dynamic current of IO = Σ IO (C_{in} + C_{load}) × IO switching frequency × Voltage
  - C_{in}: Input capacitance
  - C_{load}: Output capacitance

Regarding θja and Ψjt, refer to Table 2.11.

Table 2.11 Thermal Resistance

Parameter	Package	Symbol	Value*1	Unit	Test conditions
Thermal Resistance	48-pin QFN (PWQN0048KC-A)	θja	23.9	°C/W	JESD 51-2 and 51-7 compliant
	48-pin LQFP (PLQP0048KB-B)		62.1		
	64-pin LQFP (PLQP0064KB-C)		54.6		
	100-pin LQFP (PLQP0100KB-B)		55.1		
	48-pin QFN (PWQN0048KC-A)	Ψjt	0.28	°C/W	JESD 51-2 and 51-7 compliant
	48-pin LQFP (PLQP0048KB-B)		2.39		
	64-pin LQFP (PLQP0064KB-C)		1.90		
	100-pin LQFP (PLQP0100KB-B)		1.90		

Note 1. The values are reference values when the 4-layer board is used. Thermal resistance depends on the number of layers or size of the board. For details, refer to the JEDEC standards.

2.2.7.1 Calculation guide of I_{CC}max

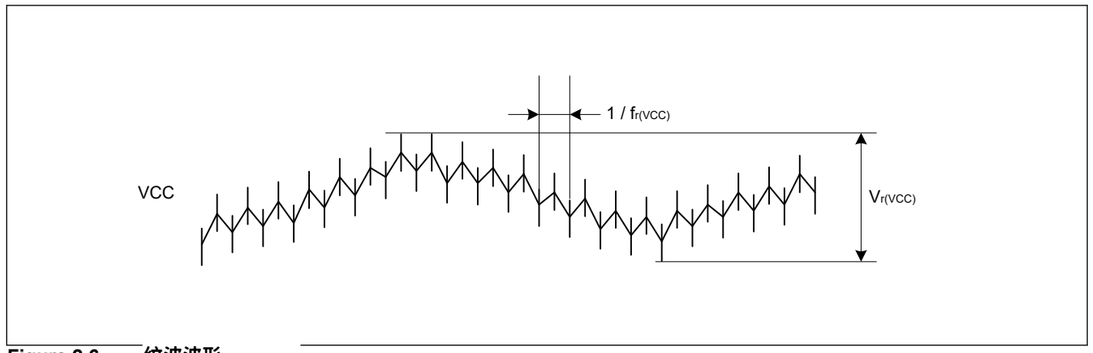

Figure 2.6 纹波波形

2.2.7 热特性

结温（Tj）的最大值不得超过"第2.2.1节的值。TjTa定义"。

Tj通过以下任一公式计算。

●Tj=Ta+θja×总功耗

●Tj=Tt+Ψjt×总功耗

Tj：结温(°C)

Ta：环境温度（°C）

Tt：顶部中心外壳温度(°C)

θja："结"到"环境"的热阻(°CW)

Ψjt："结"到"顶部中心外壳"的热阻(°CW)

●总功耗=电压×（漏电流+动态电流）

●IO漏电流=Σ(IOL×VOL)电压+Σ(IOH×VCC VOH)电压

●IO的动态电流=ΣIO(Cin+Cload)×IO开关频率×电压

Cin:输入电容

C负载：输出电容

关于θja和Ψjt，请参阅表2.11。

Table 2.11 热阻

Parameter	Package	Symbol	Value*1	Unit	测试条件
Thermal Resistance	48-pin QFN (PWQN0048KC-A)	θja	23.9	°C/W	符合JESD51-2和51-7
	48-pin LQFP (PLQP0048KB-B)		62.1		
	64-pin LQFP (PLQP0064KB-C)		54.6		
	100-pin LQFP (PLQP0100KB-B)		55.1		
	48-pin QFN (PWQN0048KC-A)	Ψjt	0.28	°C/W	符合JESD51-2和51-7
	48-pin LQFP (PLQP0048KB-B)		2.39		
	64-pin LQFP (PLQP0064KB-C)		1.90		
	100-pin LQFP (PLQP0100KB-B)		1.90		

注1.数值为使用4层板时的参考值。热阻取决于板的层数或尺寸。有关详细信息，请参阅JEDEC标准。

2.2.7.1 ICCmax的计算指南

RA生态工作室

Table 2.12 shows the power consumption of each unit.

Table 2.12 Power consumption of each unit

Dynamic current/ Leakage current	MCU Domain	Category	Item	Frequency [MHz]	Current [uA/MHz]	Current*1 [mA]
Leakage current	Analog	LDO and Leak*2	Ta = 75 °C*3	—	—	7.82
			Ta = 85 °C*3	—	—	9.13
			Ta = 95 °C*3	—	—	11.08
			Ta = 105 °C*3	—	—	14.33
Dynamic current	CPU	Operation with Flash and SRAM	Coremark	100	55.556	5.56
	Peripheral Unit	Timer	GPT16 (4ch)*4	100	3.575	0.36
			GPT32 (4ch)*4	100	4.230	0.42
			POEG (4 Groups)	50	1.361	0.07
			AGT (6ch)*4	50	9.228	0.46
			RTC	50	4.277	0.21
			WDT	50	0.764	0.04
			IWDT	50	0.339	0.02
		Communication interfaces	USBFS	50	9.385	0.47
			SCI (6ch)*4	100	18.715	1.87
			IIC (2ch)*4	50	3.367	0.16
			CAN	50	1.898	0.09
			SPI	100	3.024	0.30
			QSPI	100	2.051	0.21
			SSIE	50	3.208	0.16
			SDHI	50	6.341	0.32
		Analog	ADC12	100	2.287	0.23
			DAC12 (2ch)*4	100	0.869	0.09
			TSN	50	0.166	0.01
		Human machine interfaces	CTSU	50	0.605	0.03
		Event link	ELC	50	0.865	0.04
		Security	SCE9	100	218.100	21.81
		Data processing	CRC	100	0.600	0.06
			DOC	100	0.388	0.04
		System	CAC	50	0.844	0.04
		DMA	DMAC	100	4.479	0.45
			DTC	100	4.274	0.43

Note 1. The values are guaranteed by design.
Note 2. LDO and Leak are internal voltage regulator's current and MCU's leakage current.
It is selected according to the temperature of Ta.
Note 3. Δ(Tj-Ta) = 20 °C is considered to measure the current.
Note 4. To determine the current consumption per channel, group or unit, divide Current [mA] by the number of channels, groups or units.

Table 2.13 shows the outline of operation for each unit.

表2.12显示了每个单元的功耗。

Table 2.12 各单元耗电量

动态电流漏电流	MCU Domain	Category	Item	Frequency [MHz]	Current [uA/MHz]	Current*1 [mA]
漏电流	Analog	LDO和泄漏*2	Ta = 75 °C*3	—	—	7.82
			Ta = 85 °C*3	—	—	9.13
			Ta = 95 °C*3	—	—	11.08
			Ta = 105 °C*3	—	—	14.33
动态电流	CPU	操作与闪存和SRAM	Coremark	100	55.556	5.56
	外围单元	Timer	GPT16 (4ch)*4	100	3.575	0.36
			GPT32 (4ch)*4	100	4.230	0.42
			POEG (4 Groups)	50	1.361	0.07
			AGT (6ch)*4	50	9.228	0.46
			RTC	50	4.277	0.21
			WDT	50	0.764	0.04
			IWDT	50	0.339	0.02
		通讯接口	USBFS	50	9.385	0.47
			SCI (6ch)*4	100	18.715	1.87
			IIC (2ch)*4	50	3.367	0.16
			CAN	50	1.898	0.09
			SPI	100	3.024	0.30
			QSPI	100	2.051	0.21
			SSIE	50	3.208	0.16
			SDHI	50	6.341	0.32
		Analog	ADC12	100	2.287	0.23
			DAC12 (2ch)*4	100	0.869	0.09
			TSN	50	0.166	0.01
		人机界面	CTSU	50	0.605	0.03
		活动链接	ELC	50	0.865	0.04
		Security	SCE9	100	218.100	21.81
		数据处理	CRC	100	0.600	0.06
			DOC	100	0.388	0.04
		System	CAC	50	0.844	0.04
		DMA	DMAC	100	4.479	0.45
			DTC	100	4.274	0.43

注1.数值由设计保证。
注2.LDO和Leak是内部稳压器的电流和MCU的漏电流。
根据Ta的温度选择。
注3.测量电流时考虑Δ(Tj-Ta)=20°C。
注4.要确定每个通道、组或单元的电流消耗，请将电流[mA]除以通道 、组或单元的数量。

表2.13显示了每个单元的操作概要。

RA生态工作室

Table 2.13 Outline of operation for each unit

Peripheral	Outline of operation
GPT	Operating modes is set to saw-wave PWM mode. GPT is operating with PCLKD.
POEG	Only clear module stop bit.
AGT	AGT is operating with PCLKB.
RTC	RTC is operating with LOCO.
WDT	WDT is operating with PCLKB.
IWDT	IWDT is operating with IWDTCLK.
USBFS	Transfer types is set to bulk transfer. USBFS is operating using Full-speed transfer (12 Mbps).
SCI	SCI is transmitting data in clock synchronous mode.
IIC	Communication format is set to I2C-bus format. IIC is transmitting data in master mode.
CAN	CAN is transmitting and receiving data in self-test mode 1.
SPI	SPI mode is set to SPI operation (4-wire method). SPI master/slave mode is set to master mode. SPI is transmitting 8-bit width data.
QSPI	QSPI is issuing Fast Read Quad I/O Instruction.
SSIE	Communication mode is set to Master. System word length is set to 32 bits. Data word length is set to 20 bits. SSIE is transmitting data using I2S format.
SDHI	Transfer bus mode is set to 4-bit wide bus mode. SDHI is issuing CMD24 (single-block write).
ADC12	Resolution is set to 12-bit accuracy. Data registers is set to A/D-converted value addition mode. ADC12 is converting the analog input in continuous scan mode.
DAC12	DAC12 is outputting the conversion result while updating the value of data register.
TSN	TSN is operating.
CTSU	CTSU is operating in self-capacitance single scan mode.
ELC	Only clear module stop bit.
SCE9	SCE9 is executing built-in self test.
CRC	CRC is generating CRC code using 32-bit CRC32-C polynomial.
DOC	DOC is operating in data addition mode.
CAC	Measurement target clocks is set to PCLKB. Measurement reference clocks is set to PCLKB. CAC is measuring the clock frequency accuracy.
DMAC	Bit length of transfer data is set to 32 bits. Transfer mode is set to block transfer mode. DMAC is transferring data from SRAM0 to SRAM0.
DTC	Bit length of transfer data is set to 32 bits. Transfer mode is set to block transfer mode. DTC is transferring data from SRAM0 to SRAM0.

2.2.7.2 Example of T_j calculation

Assumption :

- Package 100-pin LQFP : θja = 55.1 °C/W
- Ta = 100 °C
- I_{CC}max = 40 mA

Table 2.13 每个单元的操作概要

Peripheral	操作概要
GPT	操作模式设置为锯齿波PWM模式。 GPT使用PCLKD运行。
POEG	只清除模块停止位。
AGT	AGT使用PCLKB运行。
RTC	RTC与LOCO一起运行。
WDT	WDT使用PCLKB运行。
IWDT	IWDT使用IWDTCLK运行。
USBFS	传输类型设置为批量传输。 USBFS使用全速传输(12Mbps)运行。
SCI	SCI在时钟同步模式下传输数据。
IIC	通信格式设置为I2C总线格式。 IIC在主机模式下传输数据。
CAN	CAN在自检模式1中发送和接收数据。
SPI	SPI模式设置为SPI操作（4线方法）。 SPI主从模式设置为主模式。 SPI正在传输8位宽度的数据。
QSPI	QSPI正在发出快速读取四线IO指令。
SSIE	通信模式设置为主。 系统字长设置为32位。 数据字长设置为20位。 SSIE使用I2S格式传输数据。
SDHI	传输总线模式设置为4位宽总线模式。 SDHI正在发布CMD24（单块写入）。
ADC12	分辨率设置为12位精度。 数据寄存器设置为AD转换值加法模式。 ADC12在连续扫描模式下转换模拟输入。
DAC12	DAC12在更新数据寄存器值的同时输出转换结果。
TSN	TSN正在运行。
CTSU	CTSU在自电容单次扫描模式下运行。
ELC	只清除模块停止位。
SCE9	SCE9正在执行内置自检。
CRC	CRC使用32位CRC32-C多项式生成CRC码。
DOC	DOC在数据添加模式下运行。
CAC	测量目标时钟设置为PCLKB。 测量参考时钟设置为PCLKB。CAC正在测量时钟 频率精度。
DMAC	传输数据的位长设置为32位。 传输模式设置为块传输模式。 DMAC正在将数据从SRAM0传输到SRAM0。
DTC	传输数据的位长设置为32位。 传输模式设置为块传输模式。 DTC正在将数据从SRAM0传输到SRAM0。

2.2.7.2 Tj计算示例

Assumption :

- Package 100-pin LQFP : θja = 55.1 °C/W
- Ta = 100 °C

●ICC最大值=40mA

RA生态工作室

- VCC = 3.5 V (VCC = AVCC = VCC_USB)
- I_{OH} = 1 mA, V_{OH} = VCC – 0.5 V, 12 Outputs
- I_{OL} = 20 mA, V_{OL} = 1.0 V, 8 Outputs
- I_{OL} = 1 mA, V_{OL} = 0.5 V, 12 Outputs
- C_{in} = 8 pF, 16 pins, Input frequency = 10 MHz
- C_{load} = 30 pF, 16 pins, Output frequency = 10 MHz

Leakage current of IO = Σ (V_{OL} × I_{OL}) / Voltage + Σ ((VCC - V_{OH}) × I_{OH}) / Voltage
= (20 mA × 1 V) × 8 / 3.5 V + (1 mA × 0.5 V) × 12 / 3.5 V + ((VCC - (VCC - 0.5 V)) × 1 mA) × 12 / 3.5 V
= 45.7 mA + 1.71 mA + 1.71 mA
= 49.1 mA

Dynamic current of IO = Σ IO (C_{in} + C_{load}) × IO switching frequency × Voltage
= ((8 pF × 16) × 10 MHz + (30 pF × 16) × 10 MHz) × 3.5 V
= 21.3 mA

Total power consumption = Voltage × (Leakage current + Dynamic current)
= (40 mA × 3.5 V) + (49.1 mA + 21.3 mA) × 3.5 V
= 386 mW (0.386 W)

Tj = Ta + θja × Total power consumption
= 100 °C + 55.1 °C/W × 0.386W
= 121.3 °C

2.3 AC Characteristics

2.3.1 Frequency

Table 2.14 Operation frequency value in high-speed mode

Parameter		Symbol	Min	Typ	Max	Unit
Operation frequency	System clock (ICLK)	f	—	—	100	MHz
	Peripheral module clock (PCLKA)		—	—	100	
	Peripheral module clock (PCLKB)		—	—	50	
	Peripheral module clock (PCLKC)		—*2	—	50	
	Peripheral module clock (PCLKD)		—	—	100	
	Flash interface clock (FCLK)		—*1	—	50	

Note 1. FCLK must run at a frequency of at least 4 MHz when programming or erasing the flash memory.
Note 2. When the ADC12 is used, the PCLKC frequency must be at least 1 MHz.

- VCC = 3.5 V (VCC = AVCC = VCC_USB)
- IOH=1mA，VOH=VCC 0.5V，12个输出
- IOL=20mA，VOL=1.0V，8个输出
- IOL=1mA，VOL=0.5V，12路输出
- Cin=8pF，16个引脚，输入频率=10MHz
- C负载=30pF，16引脚，输出频率=10MHz

IO的漏电流=Σ(VOL×IOL)电压+Σ((VCCVOH)×IOH)电压
= (20 mA × 1 V) × 8 / 3.5 V + (1 mA × 0.5 V) × 12 / 3.5 V + ((VCC - (VCC - 0.5 V)) × 1 mA) × 12 / 3.5 V
= 45.7 mA + 1.71 mA + 1.71 mA
= 49.1 mA

IO的动态电流 =ΣIO(Cin+Cload)×IO开关频率×电压
= ((8 pF × 16) × 10 MHz + (30 pF × 16) × 10 MHz) × 3.5 V
= 21.3 mA

总功耗 =电压×(漏电流+动态电流)
= (40 mA × 3.5 V) + (49.1 mA + 21.3 mA) × 3.5 V
= 386 mW (0.386 W)

Tj =Ta+θja×总功耗
= 100 °C + 55.1 °C/W × 0.386W
= 121.3 °C

2.3 交流特性

2.3.1 Frequency

Table 2.14 高速模式下的运行频率值

Parameter		Symbol	Min	Typ	Max	Unit
运行频率	系统时钟(ICLK)	f	—	—	100	MHz
	外设模块时钟(PCLKA)		—	—	100	
	外设模块时钟(PCLKB)		—	—	50	
	外设模块时钟(PCLKC)		—*2	—	50	
	外设模块时钟(PCLKD)		—	—	100	
	闪存接口时钟(FCLK)		—*1	—	50	

注1.在对闪存进行编程或擦除时，FCLK必须以至少4MHz的频率运行。
注2.使用ADC12时，PCLKC频率必须至少为1MHz。

RA生态工作室

Table 2.15 Operation frequency value in low-speed mode

Parameter		Symbol	Min	Typ	Max	Unit
Operation frequency	System clock (ICLK)	f	—	—	1	MHz
	Peripheral module clock (PCLKA)		—	—	1	
	Peripheral module clock (PCLKB)		—	—	1	
	Peripheral module clock (PCLKC) *2		—*2	—	1	
	Peripheral module clock (PCLKD)		—	—	1	
	Flash interface clock (FCLK)*1		—	—	1	

Note 1. Programming or erasing the flash memory is disabled in low-speed mode.
Note 2. When the ADC12 is used, the PCLKC frequency must be set to at least 1 MHz.

Table 2.16 Operation frequency value in Subosc-speed mode

Parameter		Symbol	Min	Typ	Max	Unit
Operation frequency	System clock (ICLK)	f	29.4	—	36.1	kHz
	Peripheral module clock (PCLKA)		—	—	36.1	
	Peripheral module clock (PCLKB)		—	—	36.1	
	Peripheral module clock (PCLKC) *2		—	—	36.1	
	Peripheral module clock (PCLKD)		—	—	36.1	
	Flash interface clock (FCLK)*1		29.4	—	36.1	

Note 1. Programming or erasing the flash memory is disabled in Subosc-speed mode.
Note 2. The ADC12 cannot be used.

2.3.2 Clock Timing

Table 2.17 Clock timing except for sub-clock oscillator (1 of 2)

Parameter	Symbol	Min	Typ	Max	Unit	Test conditions
EXTAL external clock input cycle time	t_{EXcyc}	41.66	—	—	ns	Figure 2.7
EXTAL external clock input high pulse width	t_{EXH}	15.83	—	—	ns	
EXTAL external clock input low pulse width	t_{EXL}	15.83	—	—	ns	
EXTAL external clock rise time	t_{EXr}	—	—	5.0	ns	
EXTAL external clock fall time	t_{EXf}	—	—	5.0	ns	
Main clock oscillator frequency	f_{MAIN}	8	—	24	MHz	—
Main clock oscillation stabilization wait time (crystal)*1	$t_{MAINOSCWT}$	—	—	—*1	ms	Figure 2.8
LOCO clock oscillation frequency	f_{LOCO}	29.4912	32.768	36.0448	kHz	—
LOCO clock oscillation stabilization wait time	t_{LOCOWT}	—	—	60.4	μs	Figure 2.9
ILOCO clock oscillation frequency	f_{ILOCO}	13.5	15	16.5	kHz	—
MOCO clock oscillation frequency	F_{MOCO}	6.8	8	9.2	MHz	—
MOCO clock oscillation stabilization wait time	t_{MOCOWT}	—	—	15.0	μs	—

Table 2.15 低速模式下的运行频率值

Parameter		Symbol	Min	Typ	Max	Unit
运行频率	系统时钟(ICLK)	f	—	—	1	MHz
	外设模块时钟(PCLKA)		—	—	1	
	外设模块时钟(PCLKB)		—	—	1	
	外围模块时钟(PCLKC)*2		—*2	—	1	
	外设模块时钟(PCLKD)		—	—	1	
	闪存接口时钟(FCLK)*1		—	—	1	

注1.在低速模式下禁止对闪存进行编程或擦除。
注2.使用ADC12时，PCLKC频率必须设置为至少1MHz。

Table 2.16 Subosc-speed模式下的运行频率值

Parameter		Symbol	Min	Typ	Max	Unit
运行频率	系统时钟(ICLK)	f	29.4	—	36.1	kHz
	外设模块时钟(PCLKA)		—	—	36.1	
	外设模块时钟(PCLKB)		—	—	36.1	
	外围模块时钟(PCLKC)*2		—	—	36.1	
	外设模块时钟(PCLKD)		—	—	36.1	
	闪存接口时钟(FCLK)*1		29.4	—	36.1	

注1.在Subosc速度模式下，禁止对闪存进行编程或擦除。
注2.不能使用ADC12。

2.3.2 时钟时序

Table 2.17 除副时钟振荡器外的时钟时序（2个中的1个）

Parameter	Symbol	Min	Typ	Max	Unit	测试条件
EXTAL外部时钟输入周期时间	t_{EXcyc}	41.66	—	—	ns	Figure 2.7
EXTAL外部时钟输入高脉冲宽度	t_{EXH}	15.83	—	—	ns	
EXTAL外部时钟输入低脉冲宽度	t_{EXL}	15.83	—	—	ns	
EXTAL外部时钟上升时间	t_{EXr}	—	—	5.0	ns	
EXTAL外部时钟下降时间	t_{EXf}	—	—	5.0	ns	
主时钟振荡器频率	f_{MAIN}	8	—	24	MHz	—
主时钟振荡稳定等待时间（晶体）*1	$t_{MAINOSCWT}$	—	—	—*1	ms	Figure 2.8
LOCO时钟振荡频率	f_{LOCO}	29.4912	32.768	36.0448	kHz	—
LOCO时钟振荡稳定等待时间	t_{LOCOWT}	—	—	60.4	μs	Figure 2.9
ILOCO时钟振荡频率	f_{ILOCO}	13.5	15	16.5	kHz	—
MOCO时钟振荡频率	F_{MOCO}	6.8	8	9.2	MHz	—
MOCO时钟振荡稳定等待时间	t_{MOCOWT}	—	—	15.0	μs	—

RA生态工作室

Table 2.17 Clock timing except for sub-clock oscillator (2 of 2)

Parameter		Symbol	Min	Typ	Max	Unit	Test conditions
HOCO clock oscillator oscillation frequency	Without FLL	f_{HOCO16}	15.78	16	16.22	MHz	–20 ≤ Ta ≤ 105°C
		f_{HOCO18}	17.75	18	18.25		
		f_{HOCO20}	19.72	20	20.28		
		f_{HOCO16}	15.71	16	16.29		–40 ≤ Ta ≤ –20°C
		f_{HOCO18}	17.68	18	18.32		
		f_{HOCO20}	19.64	20	20.36		
	With FLL	f_{HOCO16}	15.960	16	16.040		–40 ≤ Ta ≤ 105°C Sub-clock frequency accuracy is ±50 ppm.
		f_{HOCO18}	17.955	18	18.045		
		f_{HOCO20}	19.950	20	20.050		
HOCO clock oscillation stabilization wait time*2		t_{HOCOWT}	—	—	64.7	μs	—
HOCO period jitter		—	—	±85	—	ps	—
FLL stabilization wait time		t_{FLLWT}	—	—	1.8	ms	—
PLL clock frequency		f_{PLL}	100	—	200	MHz	—
PLL2 clock frequency		f_{PLL2}	120	—	240	MHz	—
PLL/PLL2 clock oscillation stabilization wait time		t_{PLLWT}	—	—	174.9	μs	Figure 2.10
PLL/PLL2 period jitter	f_{PLL}, f_{PLL2} ≥ 120MHz	—	—	±100	—	ps	—
	f_{PLL}, f_{PLL2} < 120MHz	—	—	±120	—	ps	—
PLL/PLL2 long term jitter		—	—	±300	—	ps	Term: 1μs, 10μs

Note 1. When setting up the main clock oscillator, ask the oscillator manufacturer for an oscillation evaluation, and use the results as the recommended oscillation stabilization time. Set the MOSCWTCR register to a value equal to or greater than the recommended value.
After changing the setting in the MOSCCR.MOSTP bit to start main clock operation, read the OSCSF.MOSCSF flag to confirm that it is 1, and then start using the main clock oscillator.

Note 2. This is the time from release from reset state until the HOCO oscillation frequency (f_{HOCO}) reaches the range for guaranteed operation.

Table 2.18 Clock timing for the sub-clock oscillator

Parameter	Symbol	Min	Typ	Max	Unit	Test conditions
Sub-clock frequency	f_{SUB}	—	32.768	—	kHz	—
Sub-clock oscillation stabilization wait time	$t_{SUBOSCWT}$	—	—	—*1	s	Figure 2.11

Note 1. When setting up the sub-clock oscillator, ask the oscillator manufacturer for an oscillation evaluation and use the results as the recommended oscillation stabilization time.
After changing the setting in the SOSCCR.SOSTP bit to start sub-clock operation, only start using the sub-clock oscillator after the sub-clock oscillation stabilization time elapses with an adequate margin. A value that is two times the value shown is recommended.

Table 2.17 除副时钟振荡器外的时钟时序(2of2)

Parameter		Symbol	Min	Typ	Max	Unit	测试条件
HOCO时钟振荡器振荡频率	Without FLL	f_{HOCO16}	15.78	16	16.22	MHz	–20 ≤ Ta ≤ 105°C
		f_{HOCO18}	17.75	18	18.25		
		f_{HOCO20}	19.72	20	20.28		
		f_{HOCO16}	15.71	16	16.29		–40 ≤ Ta ≤ –20°C
		f_{HOCO18}	17.68	18	18.32		
		f_{HOCO20}	19.64	20	20.36		
	With FLL	f_{HOCO16}	15.960	16	16.040		40≤Ta≤105°C副时钟频率精度为±50ppm。
		f_{HOCO18}	17.955	18	18.045		
		f_{HOCO20}	19.950	20	20.050		
HOCO时钟振荡稳定等待时间*2		t_{HOCOWT}	—	—	64.7	μs	—
HOCO周期抖动		—	—	±85	—	ps	—
FLL稳定等待时间		t_{FLLWT}	—	—	1.8	ms	—
锁相环时钟频率		f_{PLL}	100	—	200	MHz	—
PLL2时钟频率		f_{PLL2}	120	—	240	MHz	—
PLLPLL2时钟振荡稳定等待时间		t_{PLLWT}	—	—	174.9	μs	Figure 2.10
PLLPLL2周期抖动	f_{PLL}, f_{PLL2} ≥ 120MHz	—	—	±100	—	ps	—
	f_{PLL}, f_{PLL2} < 120MHz	—	—	±120	—	ps	—
PLLPLL2长期抖动		—	—	±300	—	ps	Term: 1μs, 10μs

注1.设置主时钟振荡器时，请向振荡器制造商索取振荡评估，并将结果作为推荐的振荡稳定时间。将MOSCWTCR寄存器设置为等于或大于推荐值的值。更改MOSCCR.MOSTP位的设置以启动主时钟操作后，读取OSCSF.MOSCSF标志以确认其为1，然后开始使用主时钟振荡器。

注2.这是从复位状态释放到HOCO振荡频率(fHOCO)达到保证工作范围的时间。

Table 2.18 副时钟振荡器的时钟时序

Parameter	Symbol	Min	Typ	Max	Unit	测试条件
Sub-clock frequency	f_{SUB}	—	32.768	—	kHz	—
副时钟振荡稳定等待时间	$t_{SUBOSCWT}$	—	—	—*1	s	Figure 2.11

注1.设置副时钟振荡器时，请咨询振荡器制造商进行振荡评估，并将结果作为推荐的振荡稳定时间。更改SOSCCR.SOSTP位的设置以启动副时钟操作后，只有在副时钟振荡稳定时间过去并留有足够余量后才开始使用副时钟振荡器。建议使用两倍于显示值的值。

RA生态工作室

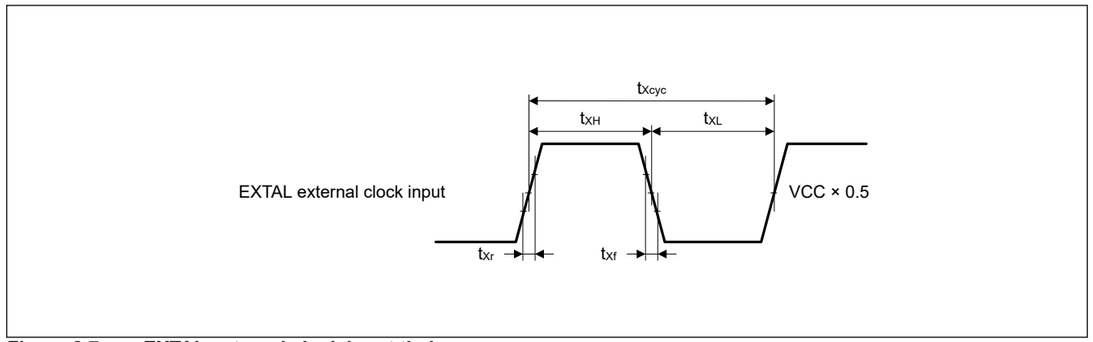

Figure 2.7 EXTAL external clock input timing

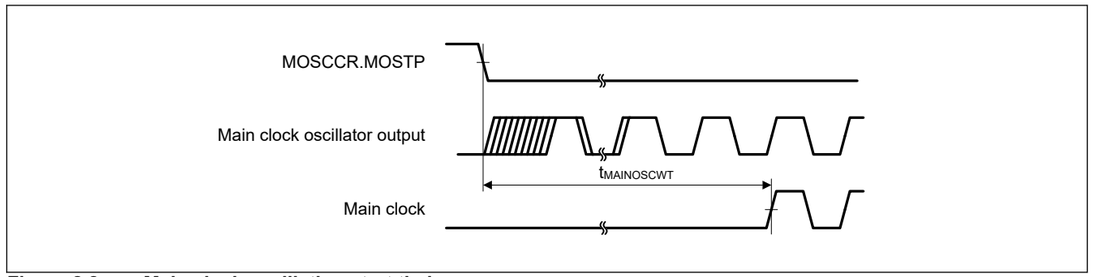

Figure 2.8 Main clock oscillation start timing

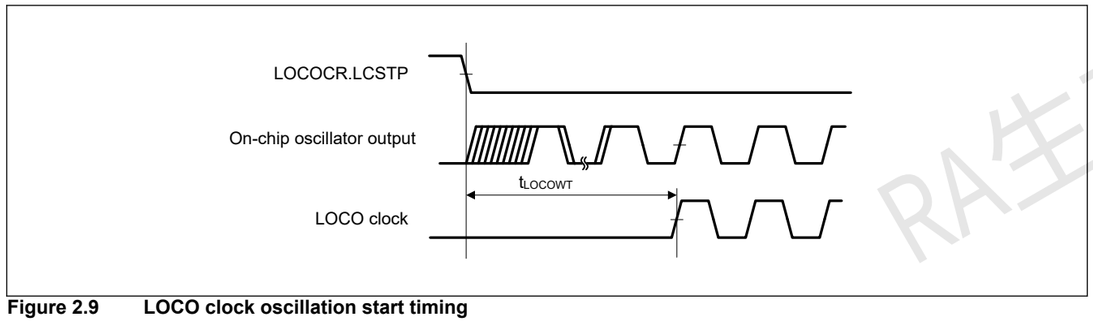

Figure 2.9 LOCO clock oscillation start timing

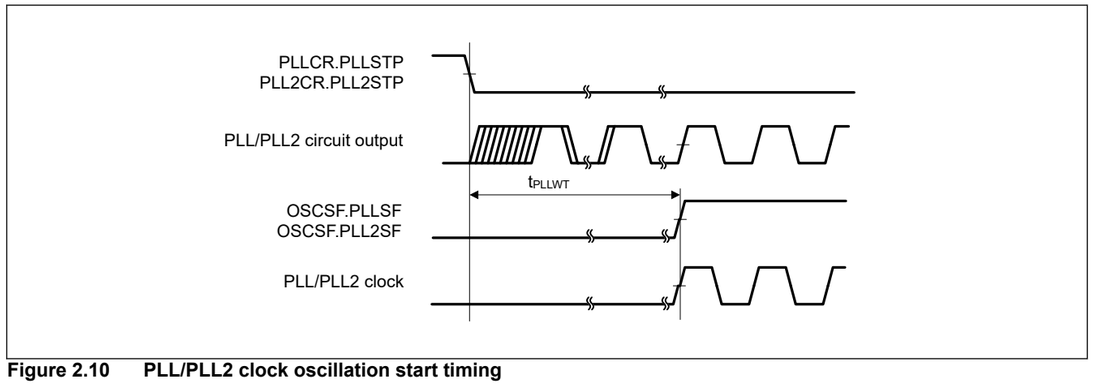

Figure 2.10 PLL/PLL2 clock oscillation start timing

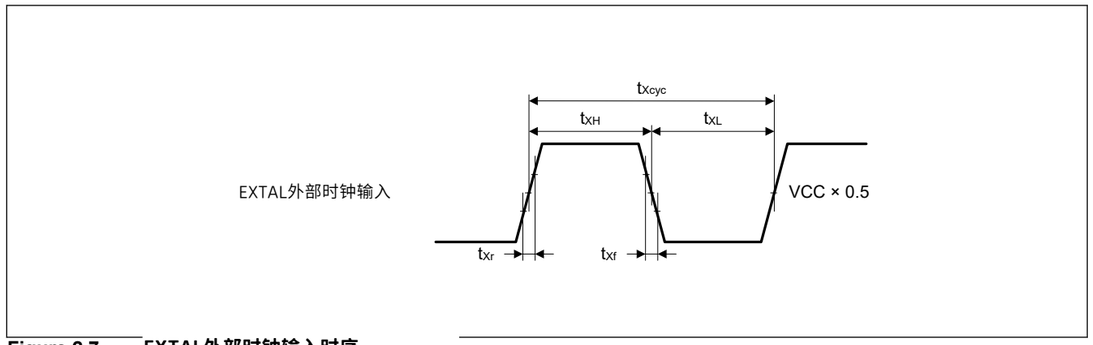

Figure 2.7 EXTAL外部时钟输入时序

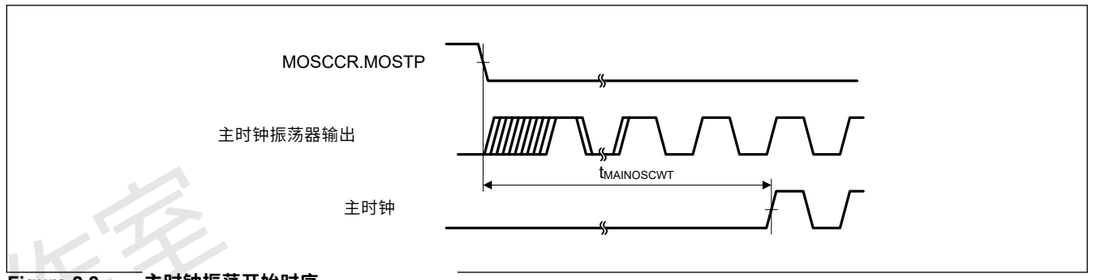

Figure 2.8 主时钟振荡开始时序

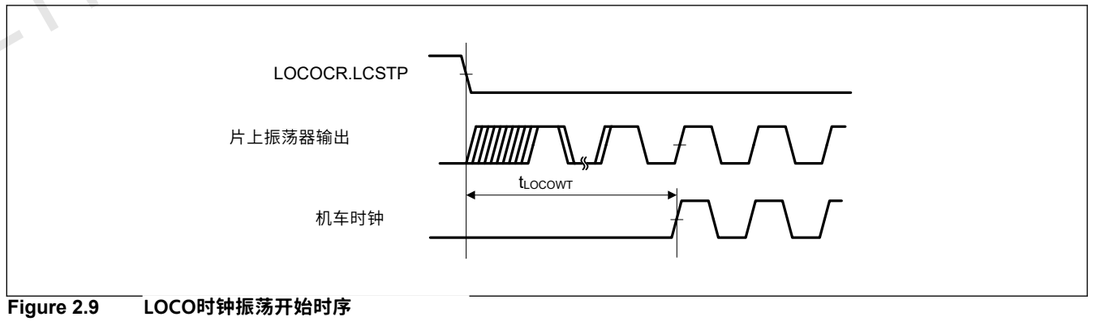

Figure 2.9 LOCO时钟振荡开始时序

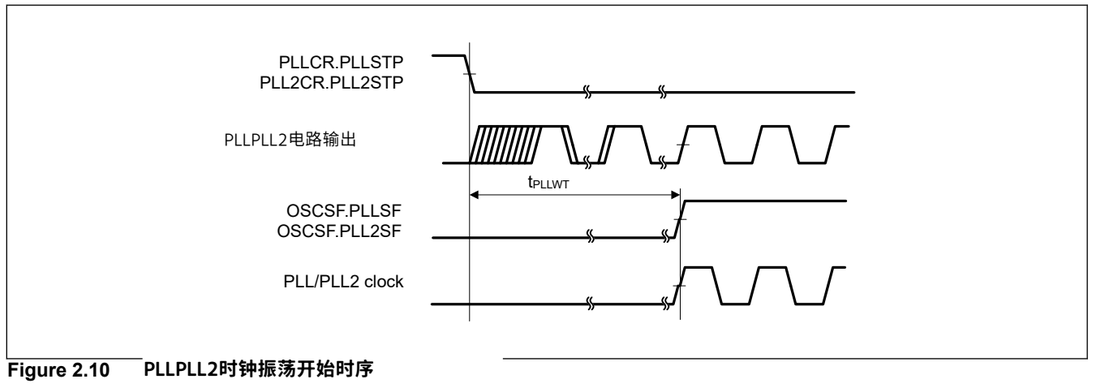

Figure 2.10 PLLPLL2时钟振荡开始时序

RA生态工作室

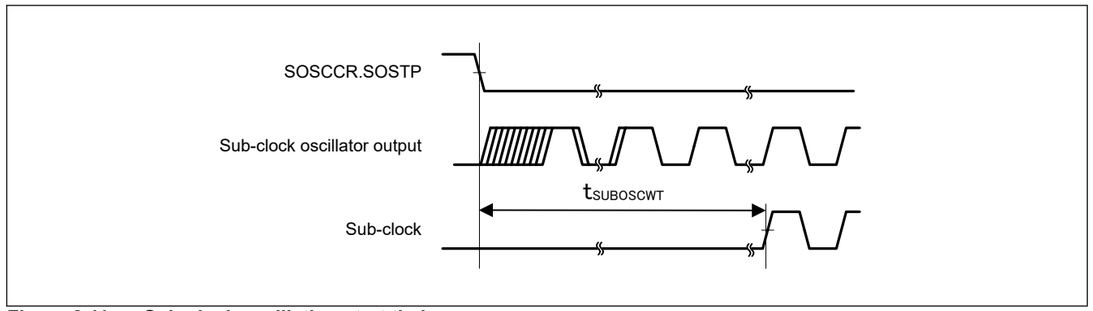

Figure 2.11 Sub-clock oscillation start timing

2.3.3 Reset Timing

Table 2.19 Reset timing

Parameter		Symbol	Min	Typ	Max	Unit	Test conditions
RES pulse width	Power-on	t_{RESWP}	0.7	—	—	ms	Figure 2.12
	Deep Software Standby mode	t_{RESWD}	0.6	—	—	ms	Figure 2.13
	Software Standby mode, Subosc-speed mode	t_{RESWS}	0.3	—	—	ms	
	All other	t_{RESW}	200	—	—	μs	
Wait time after RES cancellation		t_{RESWT}	—	37.3	41.2	μs	Figure 2.12
Wait time after internal reset cancellation (IWDT reset, WDT reset, software reset, SRAM parity error reset, SRAM ECC error reset, bus master MPU error reset, TrustZone error reset)		t_{RESW2}	—	324	397.7	μs	—

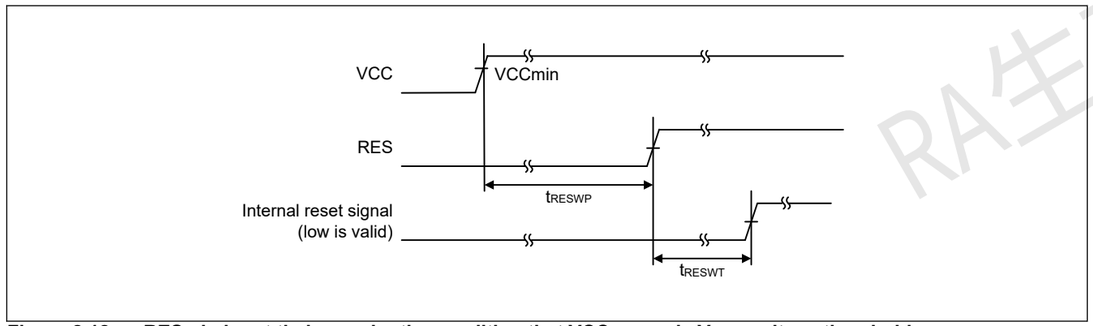

Figure 2.12 RES pin input timing under the condition that VCC exceeds V_{POR} voltage threshold

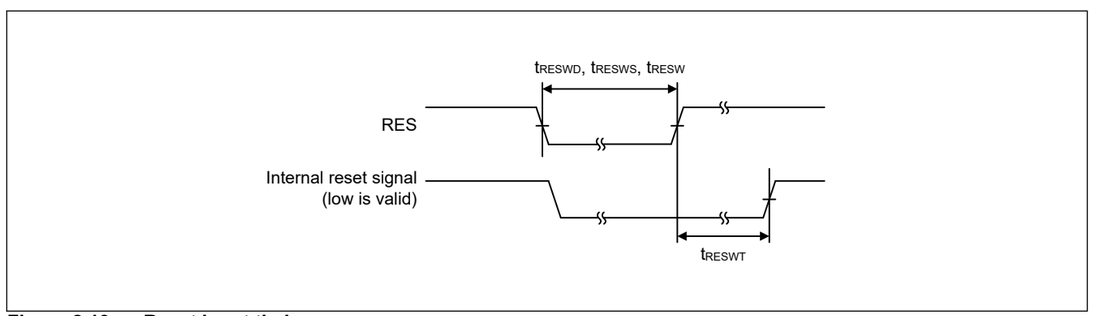

Figure 2.13 Reset input timing

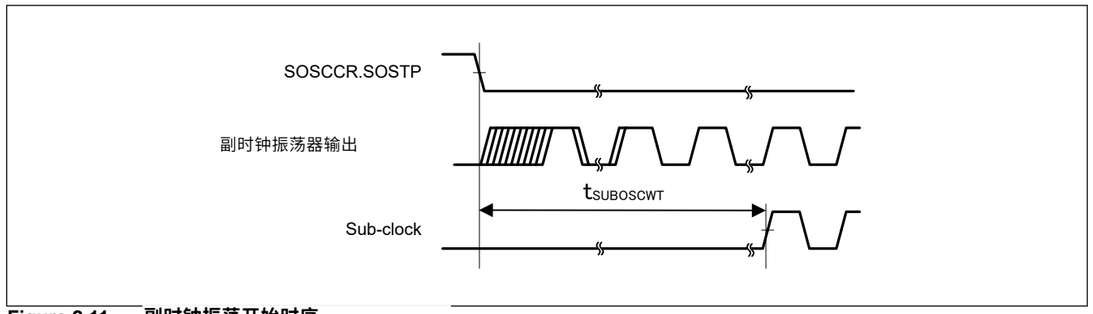

Figure 2.11 副时钟振荡开始时序

2.3.3 重置时间

Table 2.19 重置时间

Parameter		符号最小值典型值			Max	单元测试条件	
RES脉冲宽度	Power-on	t_{RESWP}	0.7	—	—	ms	Figure 2.12
	深度软件待机模式	t_{RESWD}	0.6	—	—	ms	Figure 2.13
	软件待机模式，Subosc速度模式	t_{RESWS}	0.3	—	—	ms	
	所有其他	t_{RESW}	200	—	—	μs	
RES取消后的等待时间		t_{RESWT}	—	37.3	41.2	μs	Figure 2.12
内部复位取消后的等待时间（IWDT复位、WDT复位、软件复位、SRAM奇偶校验错误复位、SRAMECC错误复位、总线主控MPU错误复位、TrustZone错误复位）		t_{RESW2}	—	324	397.7	μs	—

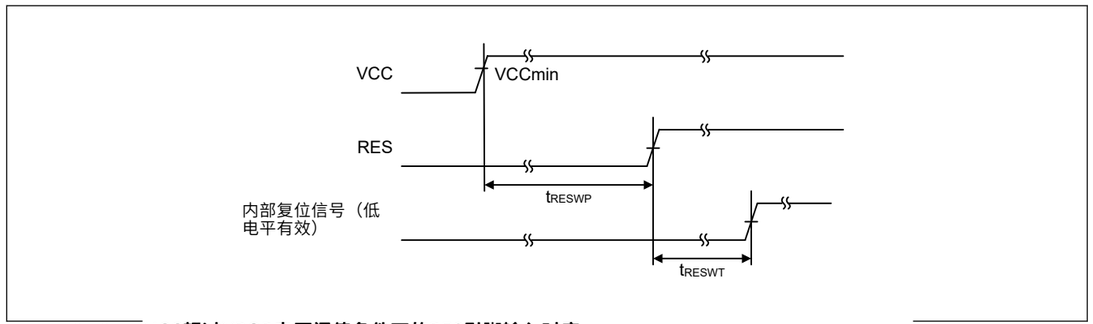

Figure 2.12 VCC超过VPOR电压阈值条件下的RES引脚输入时序

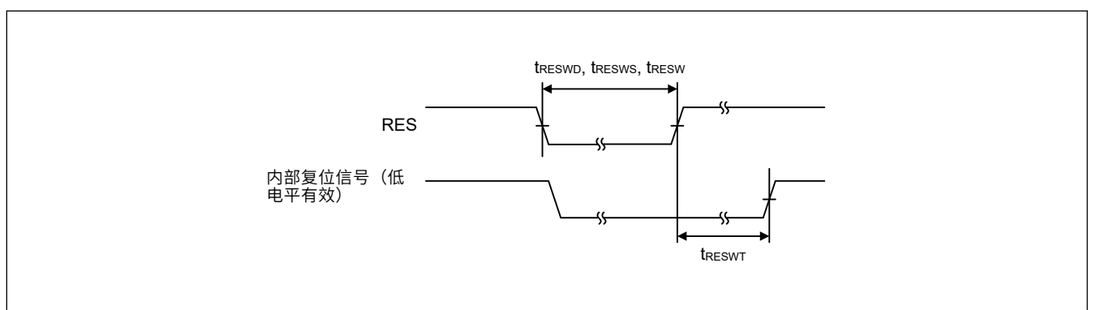

Figure 2.13 复位输入时序

RA生态工作室

2.3.4 Wakeup Timing

Table 2.20 Timing of recovery from low power modes

Parameter			Symbol	Min	Typ	Max	Unit	Test conditions
Recovery time from Software Standby mode*1	Crystal resonator connected to main clock oscillator	System clock source is main clock oscillator*2	t_{SBYMC}*13	—	2.1	2.4	ms	Figure 2.14 The division ratio of all oscillators is 1.
		System clock source is PLL with main clock oscillator*3	t_{SBYPC}*13	—	2.2	2.6	ms	
	External clock input to main clock oscillator	System clock source is main clock oscillator*4	t_{SBYEX}*13	—	45	125	μs	
		System clock source is PLL with main clock oscillator*5	t_{SBYPE}*13	—	170	255	μs	
	System clock source is sub-clock oscillator*6 *11		t_{SBYSC}*13	—	0.7	0.8	ms	
	System clock source is LOCO*7 *11		t_{SBYLO}*13	—	0.7	0.9	ms	
	System clock source is HOCO clock oscillator*8		t_{SBYHO}*13	—	55	130	μs	
	System clock source is PLL with HOCO*9		t_{SBYPH}*13	—	175	265	μs	
	System clock source is MOCO clock oscillator*10		t_{SBYMO}*13	—	35	65	μs	
Recovery time from Deep Software Standby mode	DPSBYCR.DEEPCUT[1] = 0 and DPSWCR.WTSTS[5:0] = 0x0E		t_{DSBY}	—	0.38	0.54	ms	Figure 2.15
	DPSBYCR.DEEPCUT[1] = 1 and DPSWCR.WTSTS[5:0] = 0x19		t_{DSBY}	—	0.55	0.73	ms	
Wait time after cancellation of Deep Software Standby mode			t_{DSBYWT}	56	—	57	t_{cyc}	
Recovery time from Software Standby mode to Snooze mode	High-speed mode when system clock source is HOCO (20 MHz)		t_{SNZ}	—	35*12	70*12	μs	Figure 2.16
	High-speed mode when system clock source is MOCO (8 MHz)		t_{SNZ}	—	11*12	14*12	μs	

Note 1. The recovery time is determined by the system clock source. When multiple oscillators are active, the recovery time can be determined with the following equation:
Total recovery time = recovery time for an oscillator as the system clock source + the longest tSBYOSCWT in the active oscillators - tSBYOSCWT for the system clock + 2 LOCO cycles (when LOCO is operating) + Subosc is oscillating and MSTPC0 = 0 (CAC module stop))
Note 2. When the frequency of the crystal is 24 MHz (Main Clock Oscillator Wait Control Register (MOSCWTCR) is set to 0x05) and the greatest value of the internal clock division setting is 1.
Note 3. When the frequency of PLL is 200 MHz (Main Clock Oscillator Wait Control Register (MOSCWTCR) is set to 0x05) and the greatest value of the internal clock division setting is 4.
Note 4. When the frequency of the external clock is 24 MHz (Main Clock Oscillator Wait Control Register (MOSCWTCR) is set to 0x00) and the greatest value of the internal clock division setting is 1.
Note 5. When the frequency of PLL is 200 MHz (Main Clock Oscillator Wait Control Register (MOSCWTCR) is set to 0x00) and the greatest value of the internal clock division setting is 4.
Note 6. The Sub-clock oscillator frequency is 32.768 KHz and the greatest value of the internal clock division setting is 1.
Note 7. The LOCO frequency is 32.768 KHz and the greatest value of the internal clock division setting is 1.
Note 8. The HOCO frequency is 20 MHz and the greatest value of the internal clock division setting is 1.
Note 9. The PLL frequency is 200 MHz and the greatest value of the internal clock division setting is 4.
Note 10. The MOCO frequency is 8 MHz and the greatest value of the internal clock division setting is 1.
Note 11. In Subosc-speed mode, the sub-clock oscillator or LOCO continues oscillating in Software Standby mode.
Note 12. When the SNZCR.RXDREQEN bit is set to 0, the following time is added as the power supply recovery time: 16 μs (typical), 48 μs (maximum).
Note 13. The recovery time can be calcurated with the equation of tSBYOSCWT + tSBYSEQ. And they can be determined with the fol-lowing value and equation. For n, the greatest value is selected from among the internal clock division settings.

Wakeup time	TYP		MAX		Unit
	tSBYOSCWT	tSBYSEQ	tSBYOSCWT	tSBYSEQ	
tSBYMC	(MSTS[7:0]*32 + 3) / 0.262	35 + 18 / fICLK + 4n / fMAIN	(MSTS[7:0]*32 + 14 / 0.236	62 + 18 / fICLK + 4n / fMAIN	μs

2.3.4 唤醒时间

Table 2.20 从低功耗模式恢复的时间

Parameter			Symbol	Min	Typ	Max	单元	测试条件
恢复时间从软件待机模式*1	连接到主时钟振荡器的晶体谐振器	系统时钟源为主时钟振荡器*2	t_{SBYMC}*13	—	2.1	2.4	ms	Figure 2.14 所有振荡器的分频比为1。
		系统时钟源为带主时钟振荡器的PLL*3	t_{SBYPC}*13	—	2.2	2.6	ms	
	主时钟振荡器的外部时钟输入	系统时钟源为主时钟振荡器*4	t_{SBYEX}*13	—	45	125	μs	
		系统时钟源为带主时钟振荡器的PLL*5	t_{SBYPE}*13	—	170	255	μs	
	系统时钟源为副时钟振荡器*6*11		t_{SBYSC}*13	—	0.7	0.8	ms	
	系统时钟源为LOCO*7*11		t_{SBYLO}*13	—	0.7	0.9	ms	
	系统时钟源为HOCO时钟振荡器*8		t_{SBYHO}*13	—	55	130	μs	
	系统时钟源是带有HOCO*9的PLL		t_{SBYPH}*13	—	175	265	μs	
	系统时钟源为MOCO时钟振荡器*10		t_{SBYMO}*13	—	35	65	μs	
恢复时间从深度软件待机模式	DPSBYCR.DEEPCUT[1] = 0 and DPSWCR.WTSTS[5:0] = 0x0E		t_{DSBY}	—	0.38	0.54	ms	Figure 2.15
	DPSBYCR.DEEPCUT[1] = 1 and DPSWCR.WTSTS[5:0] = 0x19		t_{DSBY}	—	0.55	0.73	ms	
取消深度软件待机模式后的等待时间			t_{DSBYWT}	56	—	57	t_{cyc}	
恢复时间从软件待机模式到贪睡模式	系统时钟源为高速模式 HOCO (20 MHz)		t_{SNZ}	—	35*12	70*12	μs	Figure 2.16
	系统时钟源为高速模式 MOCO (8 MHz)		t_{SNZ}	—	11*12	14*12	μs	

注1.恢复时间由系统时钟源决定。当多个振荡器处于活动状态时，恢复时间可以通过以下公式确定：总恢复时间=一个振荡器作为系统时钟源的恢复时间+系统时钟有效振荡器中的最长tSBYOSCWTtSBYOSCWT+2个LOCO周期（当LOCO正在运行）+Subosc正在振荡且MSTPC0=0（CAC模块停止））

注2.当晶振频率为24MHz（主时钟振荡器等待控制寄存器（MOSCWTCR）设置为0x05）且内部时钟分频设置的最大值为1时。

注3.当PLL的频率为200MHz（主时钟振荡器等待控制寄存器（MOSCWTCR）设置为0x05）且内部时钟分频设置的最大值为4时。

注4.当外部时钟频率为24MHz（主时钟振荡器等待控制寄存器（MOSCWTCR）设置为0x00）且内部时钟分频设置的最大值为1时。

注5.当PLL的频率为200MHz（主时钟振荡器等待控制寄存器（MOSCWTCR）设置为0x00）且内部时钟分频设置的最大值为4时。

注6.副时钟振荡器频率为32.768KHz，内部时钟分频设置的最大值为1。
注7.LOCO频率为32.768KHz，内部时钟分频设置的最大值为1。
注8.HOCO频率为20MHz，内部时钟分频设置最大值为1。注9.PLL频率为200MHz，内部时钟分频设置最大值为4。注10.MOCO频率为8MHz，内部时钟分频设置的最大值为1。

注11.在Subosc速度模式下，副时钟振荡器或LOCO在软件待机模式下继续振荡。
注12.当SNZCR.RXDREQEN位设置为0时，添加以下时间作为电源恢复时间：16μs（典型值）、48μs（最大值）。

注13.恢复时间可以用tSBYOSCWT+tSBYSEQ等式计算。它们可以用下面的值和方程来确定。对于n，从内部时钟分频设置中选择最大值。

唤醒时间典型值			MAX		Unit
	tSBYOSCWT	tSBYSEQ	tSBYOSCWT	tSBYSEQ	
tSBYMC	(MSTS[7:0]*32 + 3) / 0.262	35 + 18 / fICLK + 4n / fMAIN	(MSTS[7:0]*32 + 14 / 0.236	62 + 18 / fICLK + 4n / fMAIN	μs

RA生态工作室

Wakeup time	TYP		MAX		Unit
	tSBYOSCWT	tSBYSEQ	tSBYOSCWT	tSBYSEQ	
tSBYPC	(MSTS[7:0]*32 + 34) / 0.262	35 + 18 / fICLK + 4n / fPLL	(MSTS[7:0]*32 + 45) / 0.236	62 + 18 / fICLK + 4n / fPLL	μs
tSBYEX	10	35 + 18 / fICLK + 4n / fEXMAIN	62	62 + 18 / fICLK + 4n / fEXMAIN	μs
tSBYPE	135	35 + 18 / fICLK + 4n / fPLL	192	62 + 18 / fICLK + 4n / fPLL	μs
tSBYSC	0	35 + 18 / fICLK + 4n / fSUB	0	62 + 18 / fICLK + 4n / fSUB	μs
tSBYLO	0	35 + 18 / fICLK + 4n / fLOCO	0	62 + 18 / fICLK + 4n / fLOCO	μs
tSBYHO	20	35 + 18 / fICLK + 4n / fHOCO	67	62 + 18 / fICLK + 4n / fHOCO	μs
tSBYPH	140	35 + 18 / fICLK + 4n / fPLL	202	62 + 18 / fICLK + 4n / fPLL	μs
tSBYMO	0	35 + 18 / fICLK + 4n / fMOCO	0	62 + 18 / fICLK + 4n / fMOCO	μs

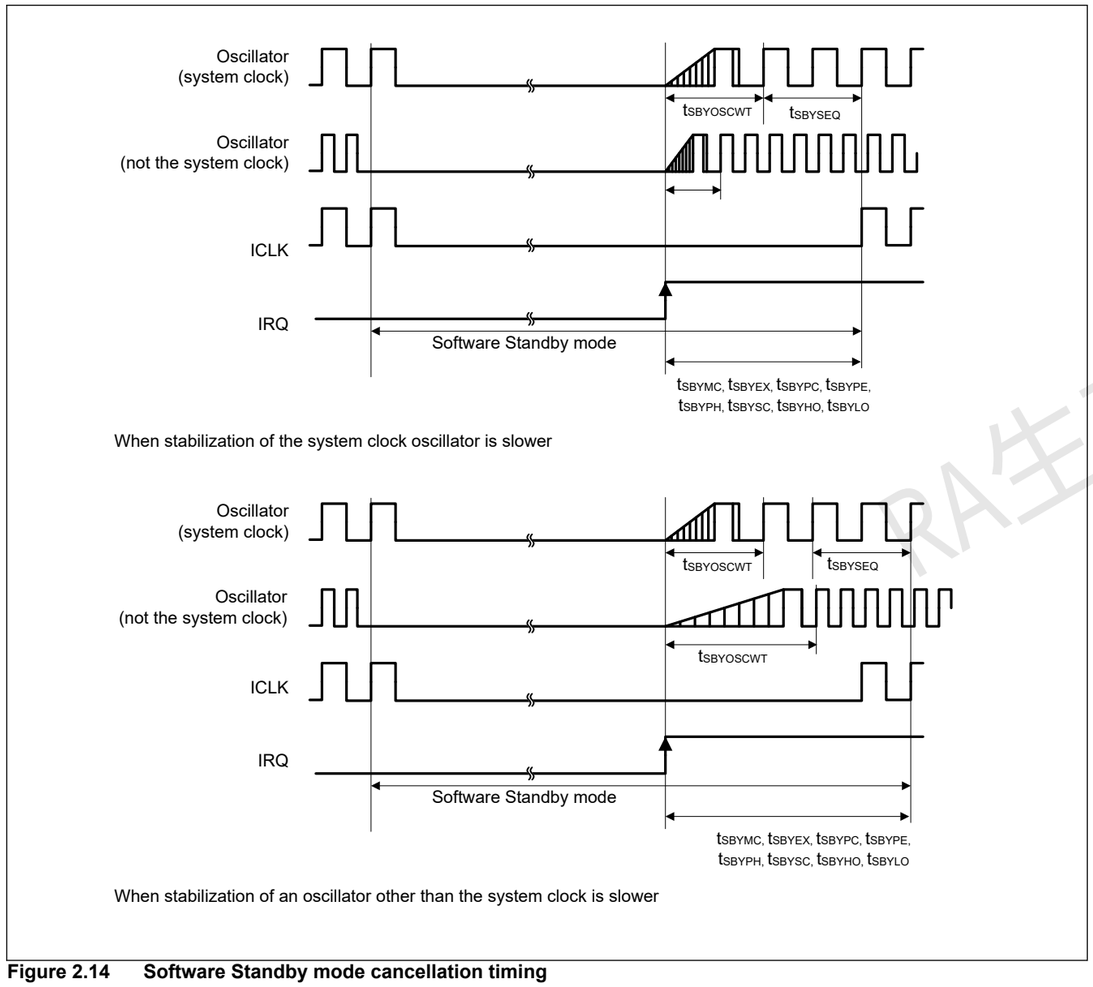

Figure 2.14 Software Standby mode cancellation timing

唤醒时间典型值			MAX		Unit
	tSBYOSCWT	tSBYSEQ	tSBYOSCWT	tSBYSEQ	
tSBYPC	(MSTS[7:0]*32 + 34) / 0.262	35 + 18 / fICLK + 4n / fPLL	(MSTS[7:0]*32 + 45) / 0.236	62 + 18 / fICLK + 4n / fPLL	μs
tSBYEX	10	35 + 18 / fICLK + 4n / fEXMAIN	62	62 + 18 / fICLK + 4n / fEXMAIN	μs
tSBYPE	135	35 + 18 / fICLK + 4n / fPLL	192	62 + 18 / fICLK + 4n / fPLL	μs
tSBYSC	0	35 + 18 / fICLK + 4n / fSUB	0	62 + 18 / fICLK + 4n / fSUB	μs
tSBYLO	0	35 + 18 / fICLK + 4n / fLOCO	0	62 + 18 / fICLK + 4n / fLOCO	μs
tSBYHO	20	35 + 18 / fICLK + 4n / fHOCO	67	62 + 18 / fICLK + 4n / fHOCO	μs
tSBYPH	140	35 + 18 / fICLK + 4n / fPLL	202	62 + 18 / fICLK + 4n / fPLL	μs
tSBYMO	0	35 + 18 / fICLK + 4n / fMOCO	0	62 + 18 / fICLK + 4n / fMOCO	μs

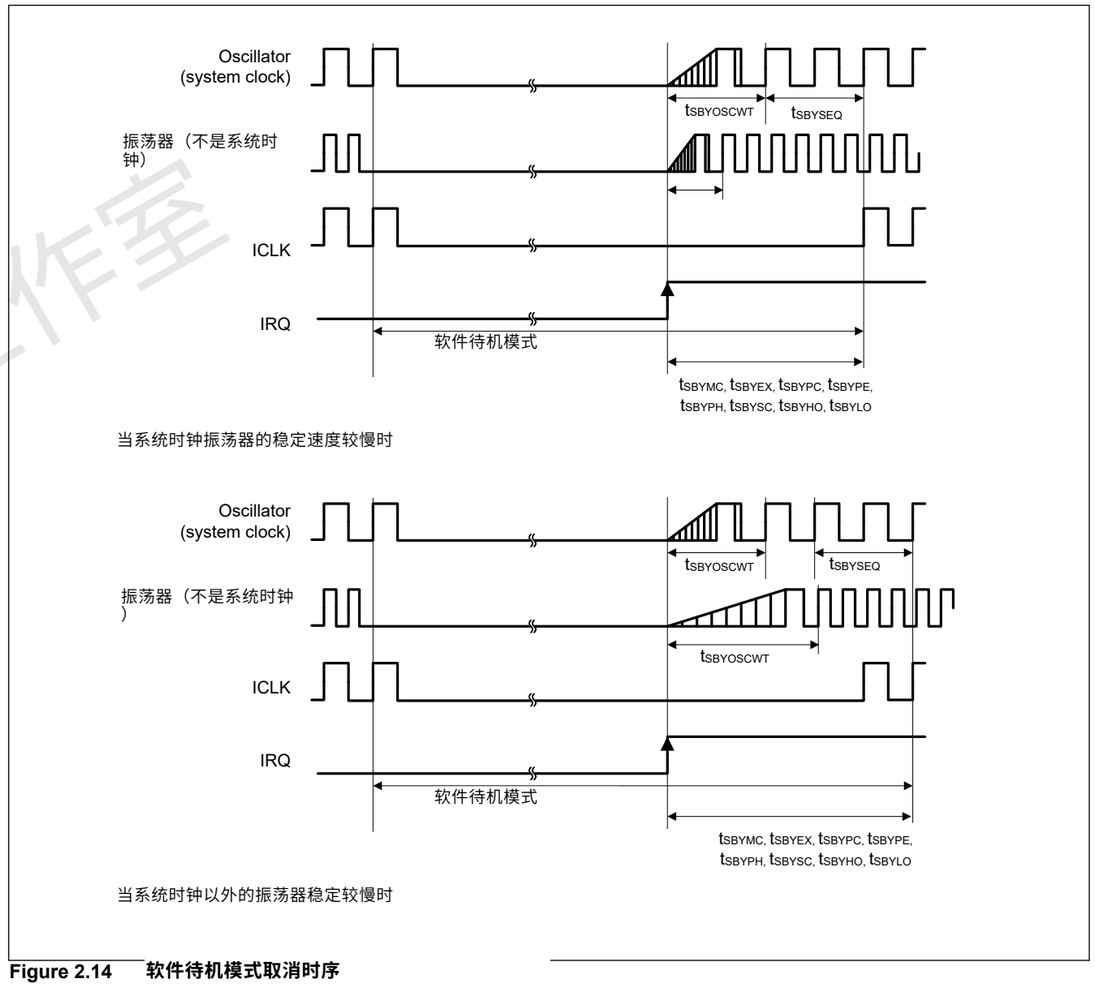

Figure 2.14 软件待机模式取消时序

RA生态工作室

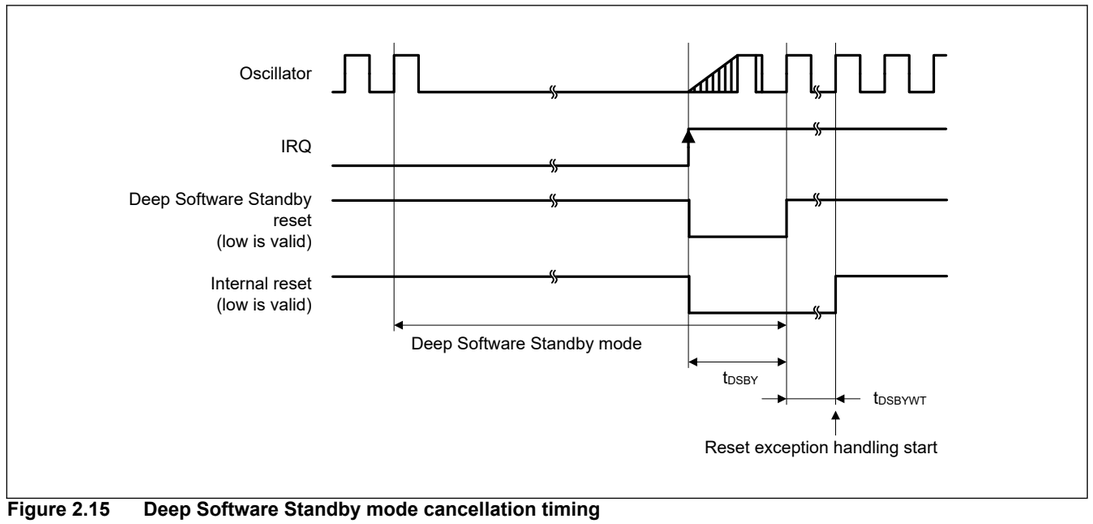

Figure 2.15 Deep Software Standby mode cancellation timing

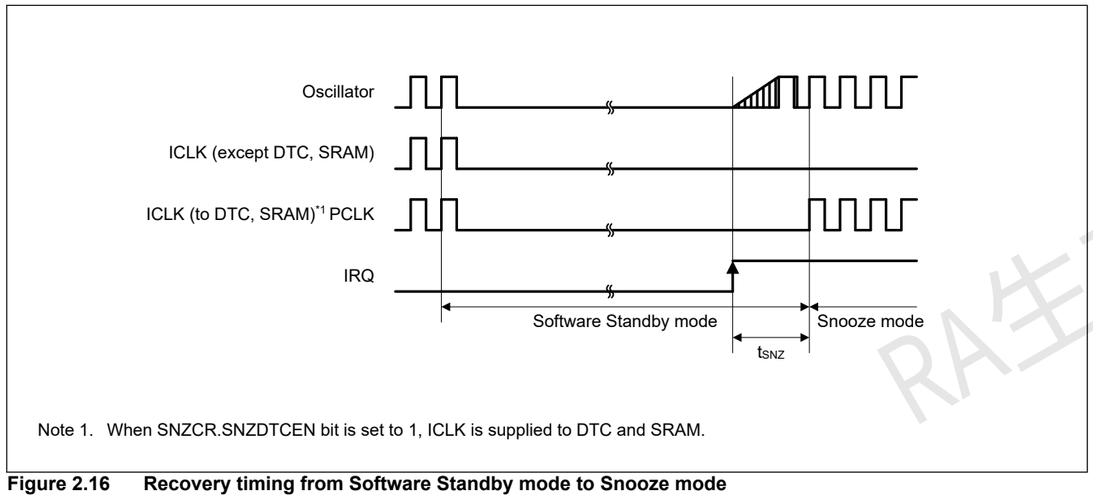

Figure 2.16 Recovery timing from Software Standby mode to Snooze mode

2.3.5 NMI and IRQ Noise Filter

Table 2.21 NMI and IRQ noise filter

Parameter	Symbol	Min	Typ	Max	Unit	Test conditions	
NMI pulse width	t_{NMIW}	200	—	—	ns	NMI digital filter disabled	$t_{Pcyc} \times 2 \le 200$ ns
		$t_{Pcyc} \times 2$*1	—	—			$t_{Pcyc} \times 2 > 200$ ns
		200	—	—		NMI digital filter enabled	$t_{NMICK} \times 3 \le 200$ ns
		$t_{NMICK} \times 3.5$*2	—	—			$t_{NMICK} \times 3 > 200$ ns
IRQ pulse width	t_{IRQW}	200	—	—	ns	IRQ digital filter disabled	$t_{Pcyc} \times 2 \le 200$ ns
		$t_{Pcyc} \times 2$*1	—	—			$t_{Pcyc} \times 2 > 200$ ns
		200	—	—		IRQ digital filter enabled	$t_{IRQCK} \times 3 \le 200$ ns
		$t_{IRQCK} \times 3.5$*3	—	—			$t_{IRQCK} \times 3 > 200$ ns

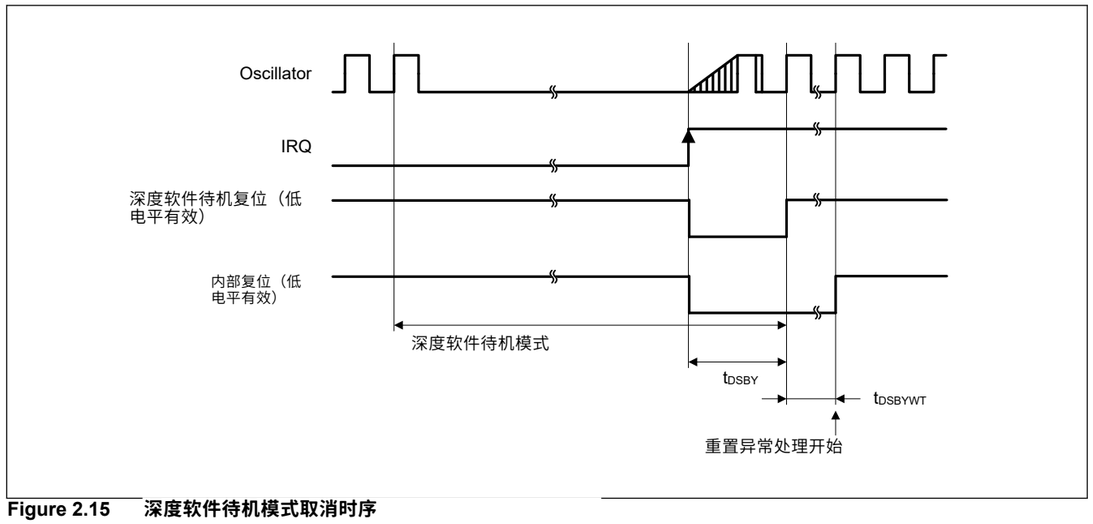

Figure 2.15 深度软件待机模式取消时序

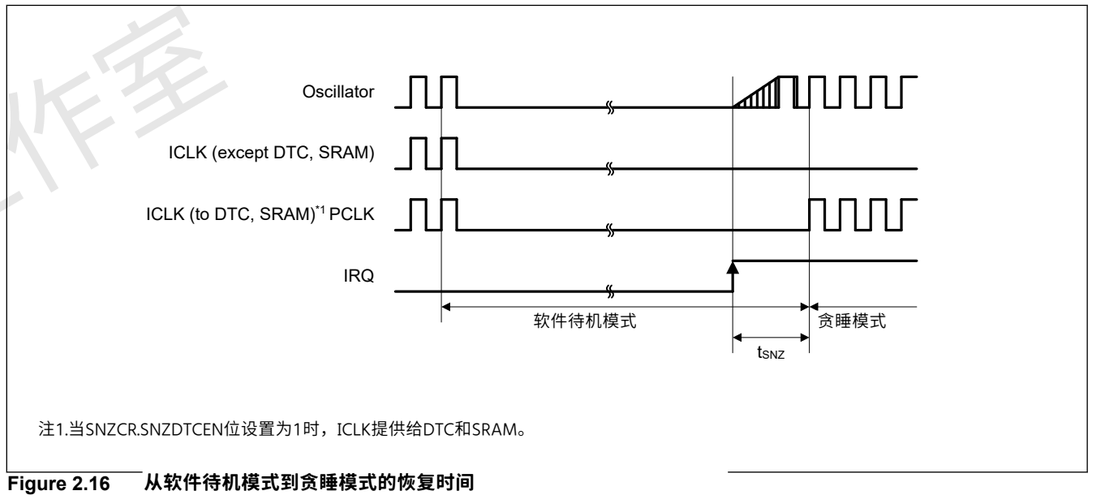

Figure 2.16 从软件待机模式到贪睡模式的恢复时间

2.3.5 NMI和IRQ噪声滤波器

Table 2.21 NMI和IRQ噪声滤波器

Parameter	Symbol	Min	Typ	Max	Unit	测试条件	
NMI脉冲宽度	t_{NMIW}	200	—	—	ns	NMI数字滤波器禁用	$t_{Pcyc} \times 2 \le 200$ ns
		$t_{Pcyc} \times 2$*1	—	—			$t_{Pcyc} \times 2 > 200$ ns
		200	—	—		启用NMI数字滤波器	$t_{NMICK} \times 3 \le 200$ ns
		$t_{NMICK} \times 3.5$*2	—	—			$t_{NMICK} \times 3 > 200$ ns
IRQ脉冲宽度	t_{IRQW}	200	—	—	ns	IRQ数字滤波器禁用	$t_{Pcyc} \times 2 \le 200$ ns
		$t_{Pcyc} \times 2$*1	—	—			$t_{Pcyc} \times 2 > 200$ ns
		200	—	—		启用IRQ数字滤波器	$t_{IRQCK} \times 3 \le 200$ ns
		$t_{IRQCK} \times 3.5$*3	—	—			$t_{IRQCK} \times 3 > 200$ ns

RA生态工作室

Note: 200 ns minimum in Software Standby mode.
Note: If the clock source is switched, add 4 clock cycles of the switched source.
Note 1. t_{Pcyc} indicates the PCLKB cycle.
Note 2. t_{NMICK} indicates the cycle of the NMI digital filter sampling clock.
Note 3. t_{IRQCK} indicates the cycle of the IRQi digital filter sampling clock.

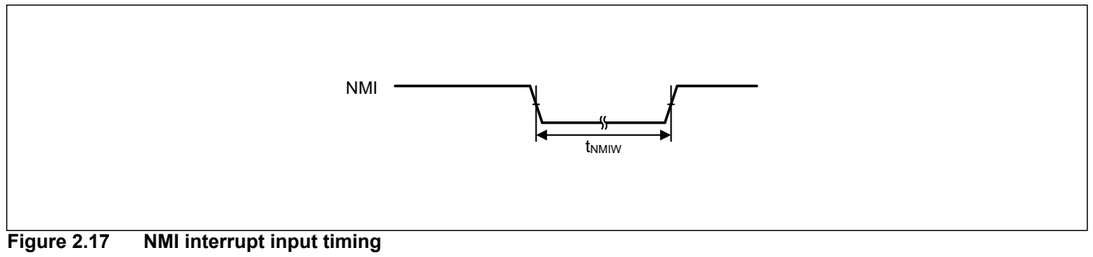

Figure 2.17 NMI interrupt input timing

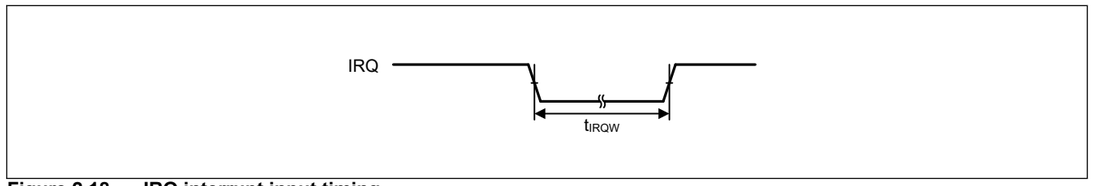

Figure 2.18 IRQ interrupt input timing

2.3.6 I/O Ports, POEG, GPT, AGT, and ADC12 Trigger Timing

Table 2.22 I/O ports, POEG, GPT, AGT, and ADC12 trigger timing

GPT32 Conditions:
High drive output is selected in the Port Drive Capability bit in the PmnPFS register.
AGT Conditions:
Middle drive output is selected in the Port Drive Capability bit in the PmnPFS register.

Parameter			Symbol	Min	Max	Unit	Test conditions
I/O ports	Input data pulse width		t_{PRW}	1.5	—	t_{Pcyc}	Figure 2.19
POEG	POEG input trigger pulse width		t_{POEW}	3	—	t_{Pcyc}	Figure 2.20
GPT	Input capture pulse width	Single edge	t_{GTICW}	1.5	—	t_{PDcyc}	Figure 2.21
		Dual edge		2.5	—		
	GTIOCxY output skew (x = 0 to 3, Y = A or B)	Middle drive buffer	t_{GTISK}*1	—	4	ns	Figure 2.22
		High drive buffer		—	4		
	GTIOCxY output skew (x = 4 to 7, Y = A or B)	Middle drive buffer		—	4		
		High drive buffer		—	4		
	GTIOCxY output skew (x = 0 to 7, Y = A or B)	Middle drive buffer		—	6		
		High drive buffer		—	6		
	OPS output skew GTOUUP, GTOULO, GTOVUP, GTOVLO, GTOWUP, GTOWLO		t_{GTOSK}	—	5	ns	Figure 2.23
AGT	AGTIO, AGTEE input cycle		t_{ACYC}*2	100	—	ns	Figure 2.24
	AGTIO, AGTEE input high width, low width		t_{ACKWH}, t_{ACKWL}	40	—	ns	
	AGTIO, AGTO, AGTOA, AGTOB output cycle		t_{ACYC2}	62.5	—	ns	
ADC12	ADC12 trigger input pulse width		t_{TRGW}	1.5	—	t_{Pcyc}	Figure 2.25

Note: t_{Pcyc}: PCLKB cycle, t_{PDcyc}: PCLKD cycle.
Note 1. This skew applies when the same driver I/O is used. If the I/O of the middle and high drivers is mixed, operation is not guaranteed.
Note 2. Constraints on input cycle:

Note: 软件待机模式下最少200ns。
Note: 如果时钟源切换，则增加切换源的4个时钟周期。
注1.tPcyc表示PCLKB周期。
注2.tNMICK表示NMI数字滤波器采样时钟的周期。注3.tIRQCK表示IRQi数字滤波器采样时钟的周期。

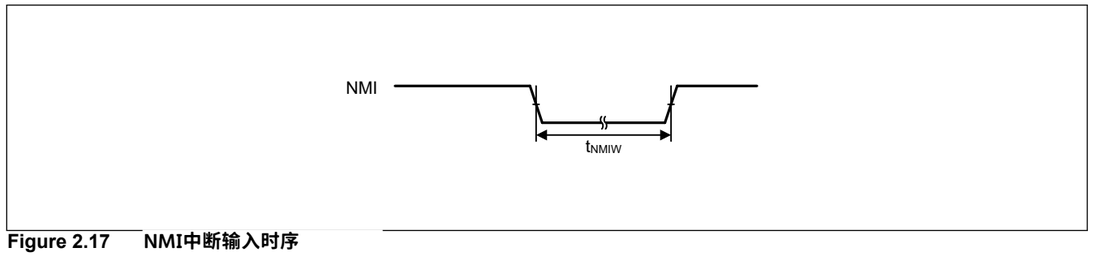

Figure 2.17 NMI中断输入时序

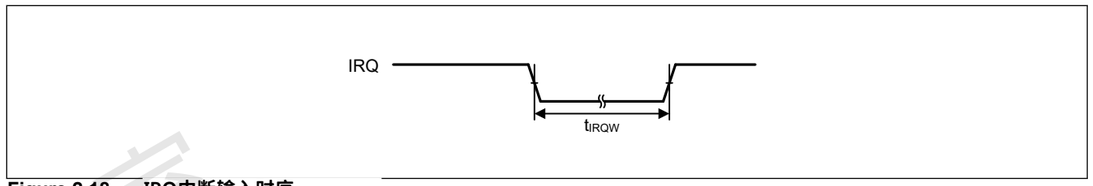

Figure 2.18 IRQ中断输入时序

2.3.6 IO端口、POEG、GPT、AGT和ADC12触发时序

Table 2.22 IO端口、POEG、GPT、AGT和ADC12触发时序

GPT32 Conditions:
在PmnPFS寄存器的端口驱动能力位中选择高驱动输出。
AGT Conditions:
在PmnPFS寄存器的端口驱动能力位中选择中间驱动输出。

Parameter			Symbol	Min	Max	Unit	测试条件
I/O ports	输入数据脉冲宽度		t_{PRW}	1.5	—	t_{Pcyc}	Figure 2.19
POEG	POEG输入触发脉冲宽度		t_{POEW}	3	—	t_{Pcyc}	Figure 2.20
GPT	输入捕捉脉冲宽度	单边	t_{GTICW}	1.5	—	t_{PDcyc}	Figure 2.21
		双刃		2.5	—		
	GTIOCxY输出偏差（x=0到3，Y=A或B）	中间驱动缓冲器	t_{GTISK}*1	—	4	ns	Figure 2.22
		高驱动缓冲器		—	4		
	GTIOCxY输出偏移（x=4到7，Y=A或B）	中间驱动缓冲器		—	4		
		高驱动缓冲器		—	4		
	GTIOCxY输出偏移（x=0到7，Y=A或B）	中间驱动缓冲器		—	6		
		高驱动缓冲器		—	6		
	OPS输出偏差 GTOUUP, GTOULO, GTOVUP, GTOVLO, GTOWUP, GTOWLO		t_{GTOSK}	—	5	ns	Figure 2.23
AGT	AGTIO、AGTEE输入周期		t_{ACYC}*2	100	—	ns	Figure 2.24
	AGTIO、AGTEE输入高宽、低宽		t_{ACKWH}, t_{ACKWL}	40	—	ns	
	AGTIO、AGTO、AGTOA、AGTOB输出周期		t_{ACYC2}	62.5	—	ns	
ADC12	ADC12触发输入脉冲宽度		t_{TRGW}	1.5	—	t_{Pcyc}	Figure 2.25

Note: t_{Pcyc}: PCLKB cycle, t_{PDcyc}: PCLKD cycle.
注1.当使用相同的驱动器IO时，此偏差适用。如果中高驱动器的IO混合使用，则无法保证运行。
注2.输入周期的限制：

RA生态工作室

When not switching the source clock: $t_{Pcyc} \times 2 < t_{ACYC}$ should be satisfied.
When switching the source clock: $t_{Pcyc} \times 6 < t_{ACYC}$ should be satisfied.

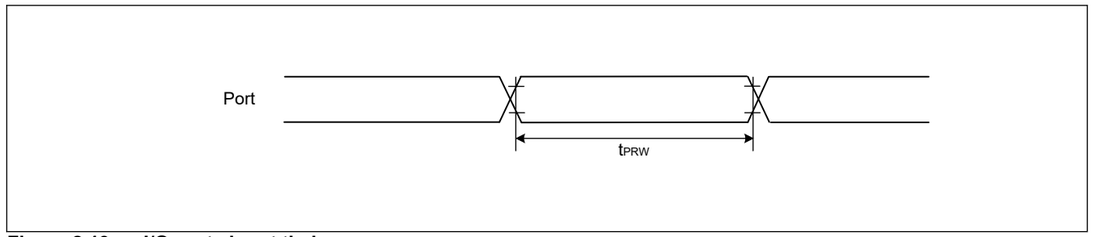

Figure 2.19 I/O ports input timing

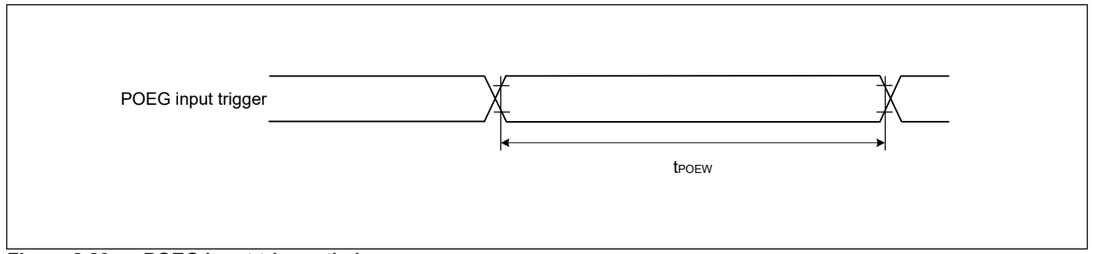

Figure 2.20 POEG input trigger timing

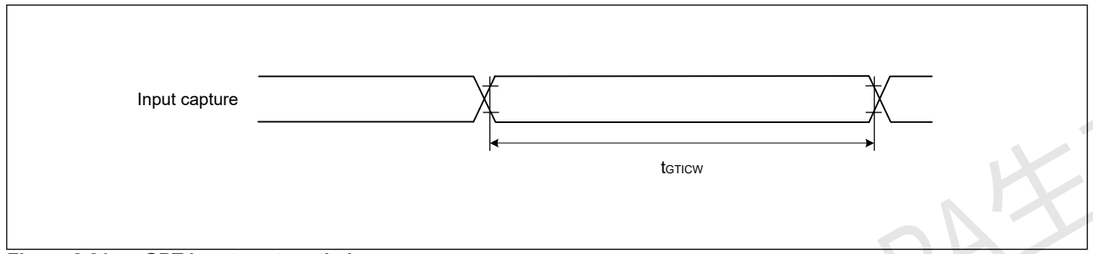

Figure 2.21 GPT input capture timing

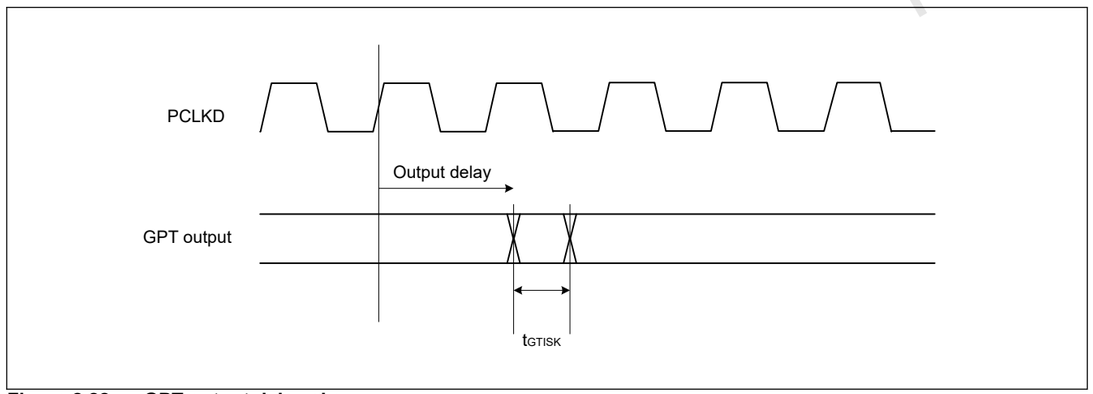

Figure 2.22 GPT output delay skew

不切换源时钟时：tPcyc×2<tACYC应满足。
切换源时钟时：tPcyc×6<tACYC应满足。

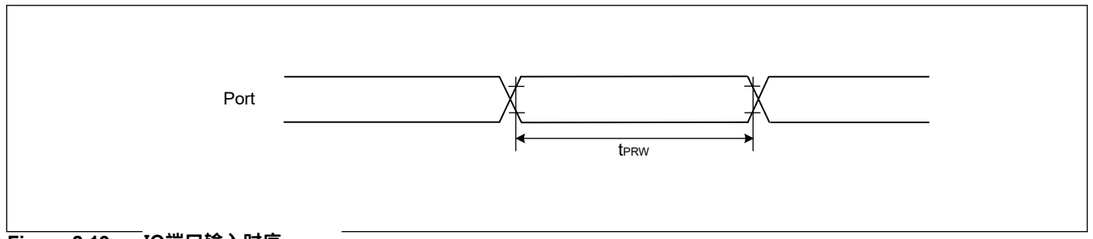

Figure 2.19 IO端口输入时序

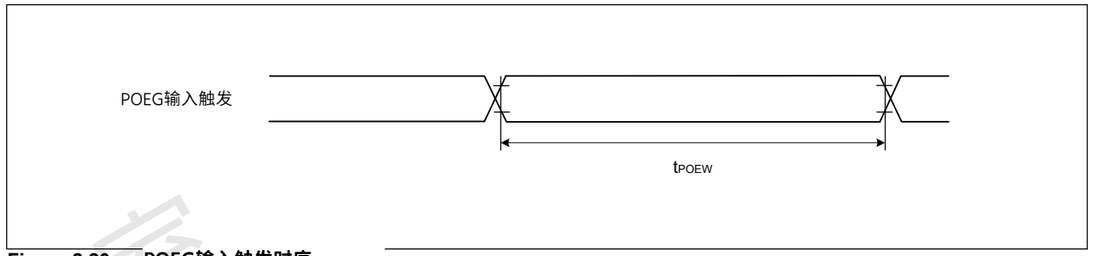

Figure 2.20 POEG输入触发时序

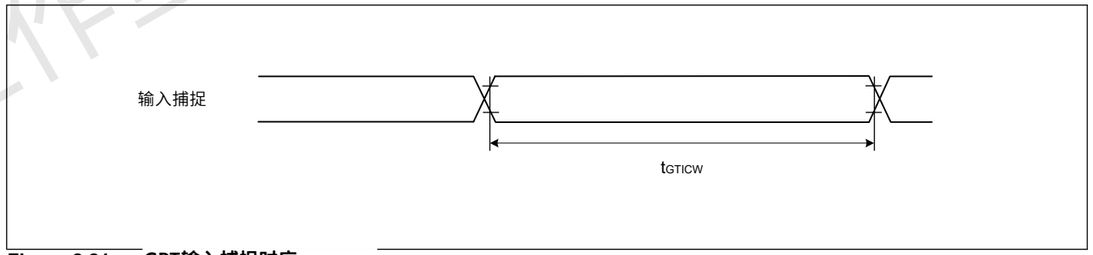

Figure 2.21 GPT输入捕捉时序

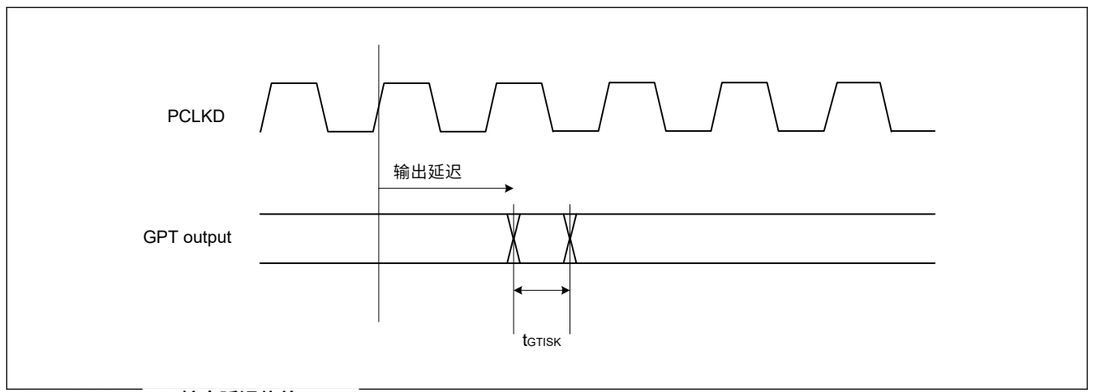

Figure 2.22 GPT输出延迟偏差

RA生态工作室

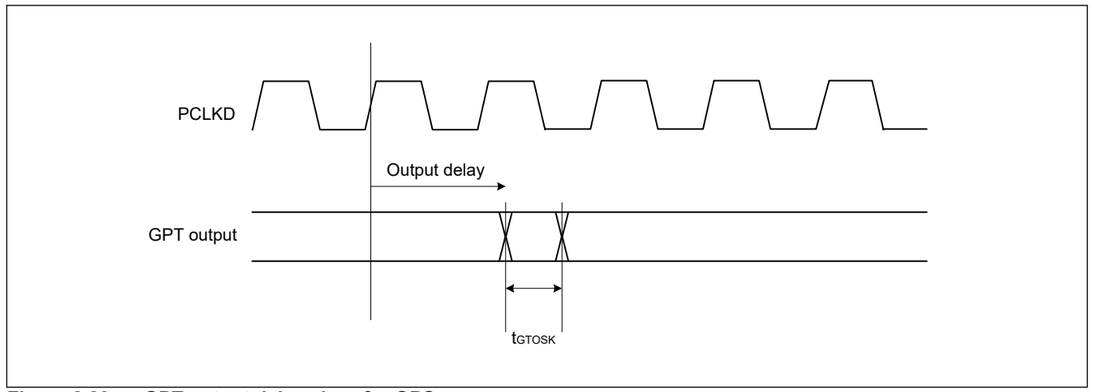

Figure 2.23 GPT output delay skew for OPS

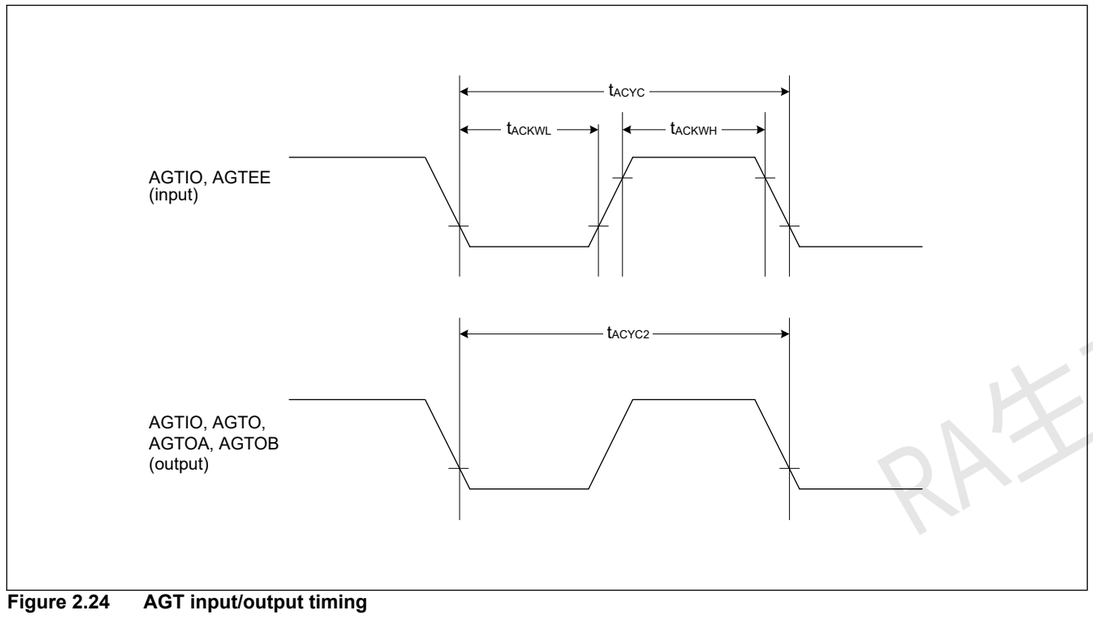

Figure 2.24 AGT input/output timing

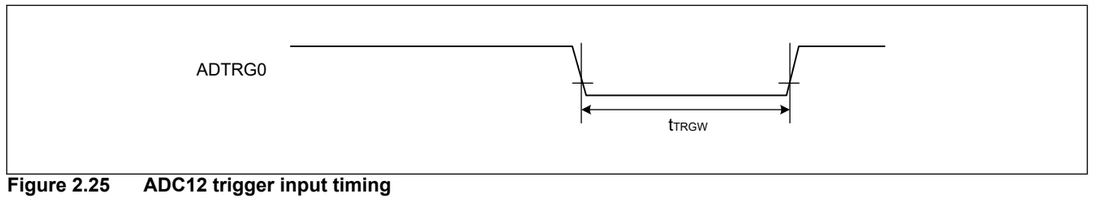

Figure 2.25 ADC12 trigger input timing

2.3.7 CAC Timing

Table 2.23 CAC timing

Parameter			Symbol	Min	Typ	Max	Unit	Test conditions
CAC	CACREF input pulse width	$t_{PBcyc} \le t_{cac}$ *1	t_{CACREF}	$4.5 \times t_{cac} + 3 \times t_{PBcyc}$	—	—	ns	—
		$t_{PBcyc} > t_{cac}$ *1		$5 \times t_{cac} + 6.5 \times t_{PBcyc}$	—	—	ns	

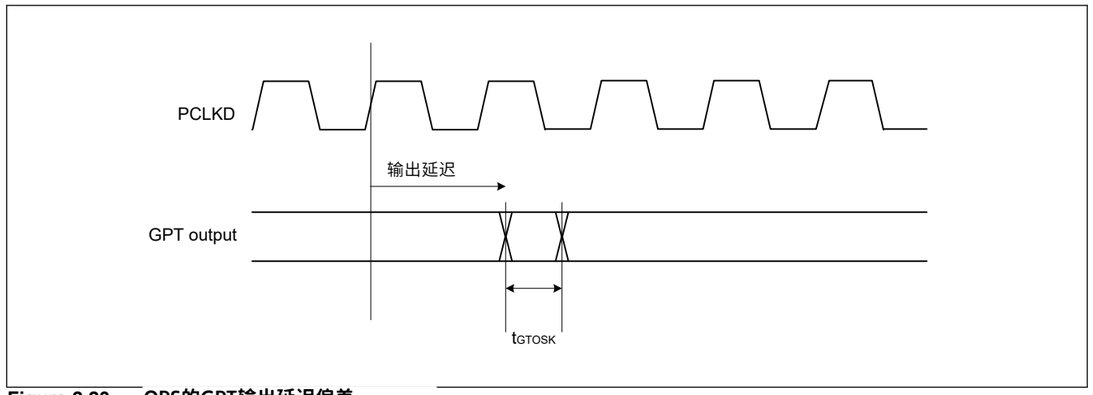

Figure 2.23 OPS的GPT输出延迟偏差

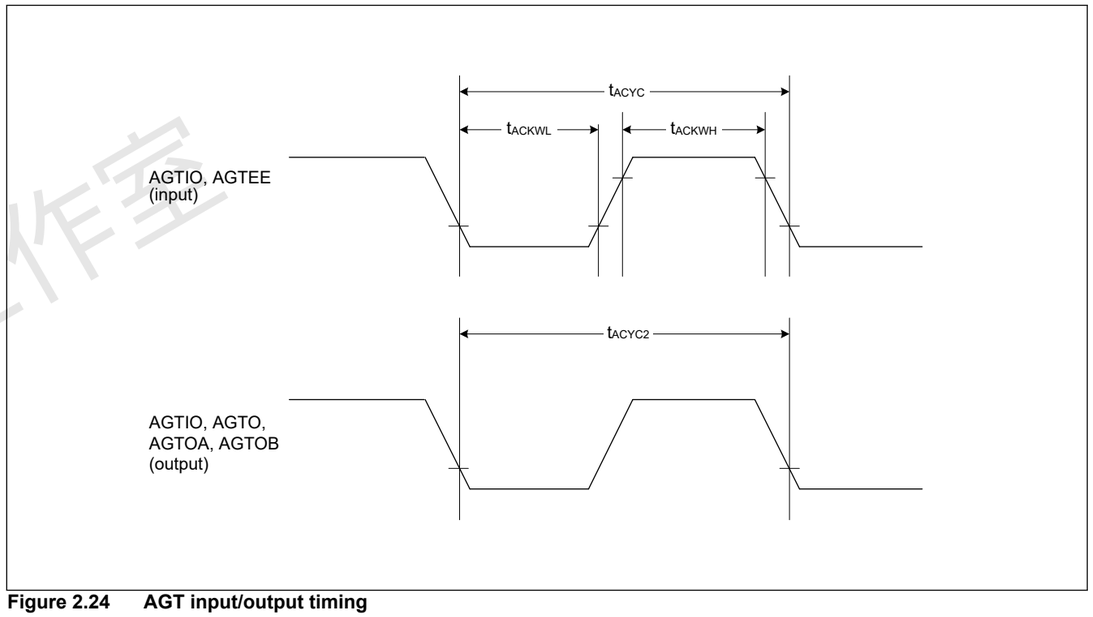

Figure 2.24 AGT input/output timing

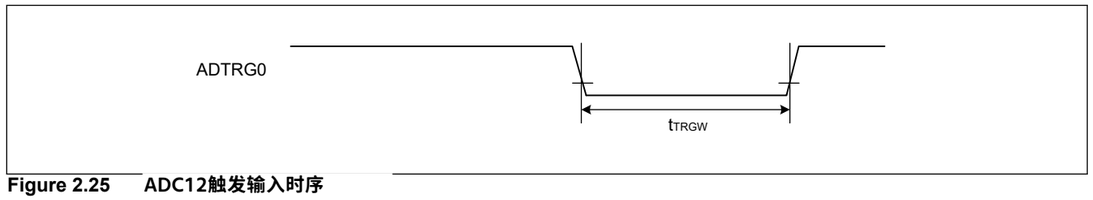

Figure 2.25 ADC12触发输入时序

2.3.7 CAC时序

Table 2.23 CAC计时

Parameter			Symbol	Min	Typ	Max	Unit	测试条件
CAC	CACREF输入脉冲宽度	$t_{PBcyc} \le t_{cac}$ *1	t_{CACREF}	$4.5 \times t_{cac} + 3 \times t_{PBcyc}$	—	—	ns	—
		$t_{PBcyc} > t_{cac}$ *1		$5 \times t_{cac} + 6.5 \times t_{PBcyc}$	—	—	ns	

RA生态工作室

Note: t_{PBcyc}: PCLKB cycle.
Note 1. t_{cac}: CAC count clock source cycle.

2.3.8 SCI Timing

Table 2.24 SCI timing (1)

Conditions: High drive output is selected in the Port Drive Capability bit in the PmnPFS register.

Parameter			Symbol	Min	Max	Unit	Test conditions
SCI	Input clock cycle	Asynchronous	t_{Scyc}	4	—	t_{Pcyc}	Figure 2.26
		Clock synchronous		6	—		
	Input clock pulse width		t_{SCKW}	0.4	0.6	t_{Scyc}	
	Input clock rise time		t_{SCKr}	—	5	ns	
	Input clock fall time		t_{SCKf}	—	5	ns	
	Output clock cycle	Asynchronous	t_{Scyc}	6 (other than SCI1, SCI2) 8 (SCI1, SCI2)	—	t_{Pcyc}	
		Clock synchronous		4	—		
	Output clock pulse width		t_{SCKW}	0.4	0.6	t_{Scyc}	
	Output clock rise time		t_{SCKr}	—	5	ns	
	Output clock fall time		t_{SCKf}	—	5	ns	
	Transmit data delay	Clock synchronous master mode (internal clock)	t_{TXD}	—	5	ns	Figure 2.27
		Clock synchronous slave mode (external clock)	t_{TXD}	—	25	ns	
	Receive data setup time	Clock synchronous master mode (internal clock)	t_{RXS}	15	—	ns	
		Clock synchronous slave mode (external clock)	t_{RXS}	5	—	ns	
	Receive data hold time	Clock synchronous	t_{RXH}	5	—	ns	

Note: t_{Pcyc}: PCLKA cycle.

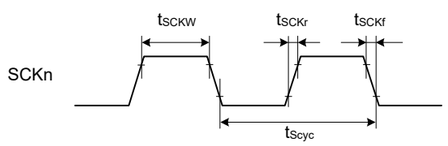

Note: n = 0 to 4, 9

Figure 2.26 SCK clock input/output timing

Note: t_{PBcyc}: PCLKB cycle.
注1.tcac：CAC计数时钟源周期。

2.3.8 SCI时序

Table 2.24 SCI时序（1）

条件：在PmnPFS寄存器的端口驱动能力位中选择高驱动输出。

Parameter			符号最小值		最大单位		测试条件
SCI输入时钟周期		Asynchronous	t_{Scyc}	4	—	t_{Pcyc}	Figure 2.26
		时钟同步		6	—		
	输入时钟脉冲宽度		t_{SCKW}	0.4	0.6	t_{Scyc}	
	输入时钟上升时间		t_{SCKr}	—	5	ns	
	输入时钟下降时间		t_{SCKf}	—	5	ns	
	输出时钟周期	Asynchronous	t_{Scyc}	6 (other than SCI1, SCI2) 8 (SCI1, SCI2)	—	t_{Pcyc}	
		时钟同步		4	—		
	输出时钟脉冲宽度		t_{SCKW}	0.4	0.6	t_{Scyc}	
	输出时钟上升时间		t_{SCKr}	—	5	ns	
	输出时钟下降时间		t_{SCKf}	—	5	ns	
	传输数据延迟	时钟同步主模式（内部时钟）	t_{TXD}	—	5	ns	Figure 2.27
		时钟同步从机模式（外部时钟）	t_{TXD}	—	25	ns	
	接收数据建立时间时钟同步主模式（内部时钟）		t_{RXS}	15	—	ns	
		时钟同步从机模式（外部时钟）	t_{RXS}	5	—	ns	
	接收数据保持时间	时钟同步	t_{RXH}	5	—	ns	

Note: t_{Pcyc}: PCLKA cycle.

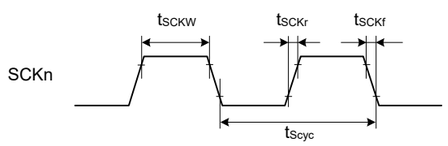

Note: n = 0 to 4, 9

Figure 2.26 SCK时钟输入输出时序

RA生态工作室

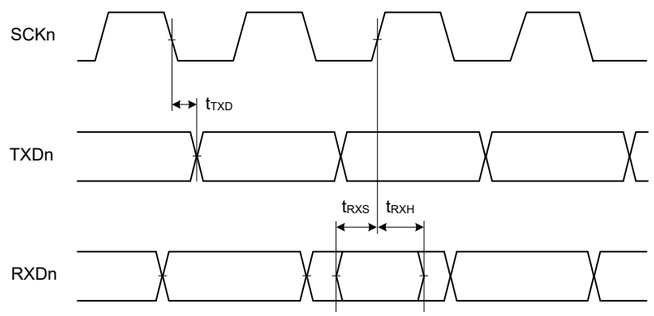

Note: n = 0 to 4, 9

Figure 2.27 SCI input/output timing in clock synchronous mode

Table 2.25 SCI timing (2)

Conditions: High drive output is selected in the Port Drive Capability bit in the PmnPFS register.

Parameter			Symbol	Min	Max	Unit	Test conditions
Simple SPI	SCK clock cycle output (master)		t_{SPcyc}	4	65536	t_{Pcyc}	Figure 2.28
	SCK clock cycle input (slave)			6	65536		
	SCK clock high pulse width		t_{SPCKWH}	0.4	0.6	t_{SPcyc}	
	SCK clock low pulse width		t_{SPCKWL}	0.4	0.6	t_{SPcyc}	
	SCK clock rise and fall time		t_{SPCKr}, t_{SPCKf}	—	5	ns	
	Data input setup time	master	t_{SU}	15	—	ns	Figure 2.29 to Figure 2.32
		slave		5	—	ns	
	Data input hold time		t_H	5	—	ns	
	SS input setup time		t_{LEAD}	1	—	t_{SPcyc}	
	SS input hold time		t_{LAG}	1	—	t_{SPcyc}	
	Data output delay	master	t_{OD}	—	5	ns	
		slave		—	25	ns	
	Data output hold time		t_{OH}	-5	—	ns	
	Data rise and fall time		t_{Dr}, t_{Df}	—	5	ns	
	SS input rise and fall time		t_{SSLr}, t_{SSLf}	—	5	ns	
	Slave access time		t_{SA}	—	$3 \times t_{Pcyc} + 25$	ns	Figure 2.32
	Slave output release time		t_{REL}	—	$3 \times t_{Pcyc} + 25$	ns	

Note: t_{Pcyc}: PCLKA cycle.

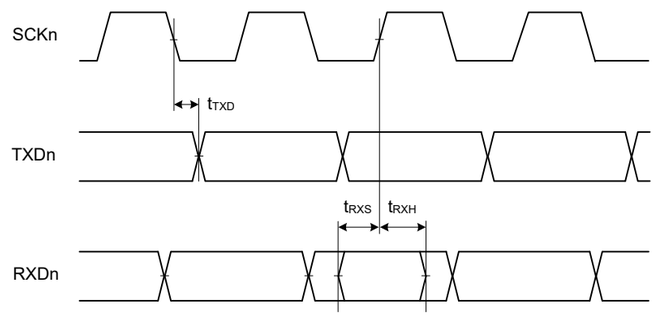

Note: n = 0 to 4, 9

Figure 2.27 时钟同步模式下的SCI输入输出时序

Table 2.25 SCI时序（2）

条件：在PmnPFS寄存器的端口驱动能力位中选择高驱动输出。

Parameter			Symbol	Min	Max	Unit	测试条件
简单的SPI	SCK时钟周期输出（主机）		t_{SPcyc}	4	65536	t_{Pcyc}	Figure 2.28
	SCK时钟周期输入（从机）			6	65536		
	SCK时钟高脉冲宽度		t_{SPCKWH}	0.4	0.6	t_{SPcyc}	
	SCK时钟低脉冲宽度		t_{SPCKWL}	0.4	0.6	t_{SPcyc}	
	SCK时钟上升和下降时间		t_{SPCKr}, t_{SPCKf}	—	5	ns	
	数据输入建立时间	master	t_{SU}	15	—	ns	图2.29至图2.32
		slave		5	—	ns	
	数据输入保持时间		t_H	5	—	ns	
	SS输入建立时间		t_{LEAD}	1	—	t_{SPcyc}	
	SS输入保持时间		t_{LAG}	1	—	t_{SPcyc}	
	数据输出延迟	master	t_{OD}	—	5	ns	
		slave		—	25	ns	
	数据输出保持时间		t_{OH}	-5	—	ns	
	数据上升和下降时间		t_{Dr}, t_{Df}	—	5	ns	
	SS输入上升和下降时间		t_{SSLr}, t_{SSLf}	—	5	ns	
	从站访问时间		t_{SA}	—	$3 \times t_{Pcyc} + 25$	ns	Figure 2.32
	从机输出释放时间		t_{REL}	—	$3 \times t_{Pcyc} + 25$	ns	

Note: t_{Pcyc}: PCLKA cycle.

RA生态工作室

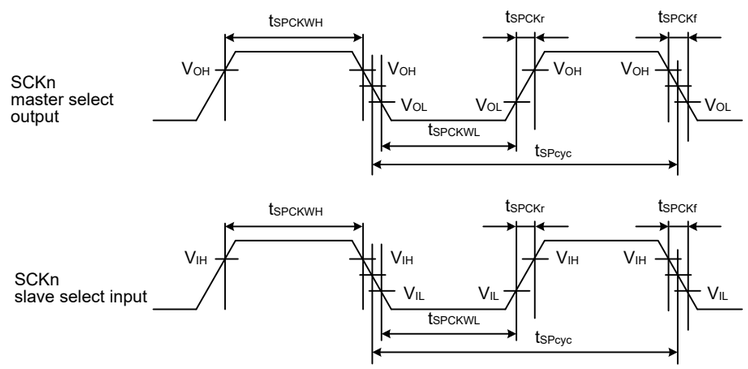

V_{OH} = 0.7 × VCC, V_{OL} = 0.3 × VCC, V_{IH} = 0.7 × VCC, V_{IL} = 0.3 × VCC

Note: n = 0 to 4, 9

Figure 2.28 SCI simple SPI mode clock timing

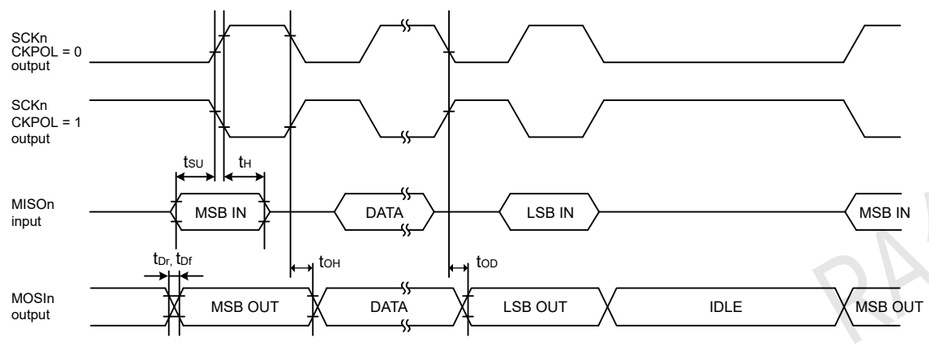

Note: n = 0 to 4, 9

Figure 2.29 SCI simple SPI mode timing for master when CKPH = 1

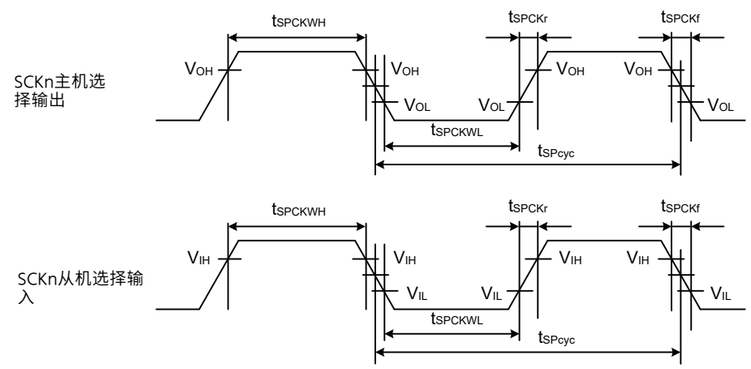

VOH=0.7×VCC，VOL=0.3×VCC，VIH=0.7×VCC，VIL=0.3×VCC

Note: n = 0 to 4, 9

Figure 2.28 SCI简单SPI模式时钟时序

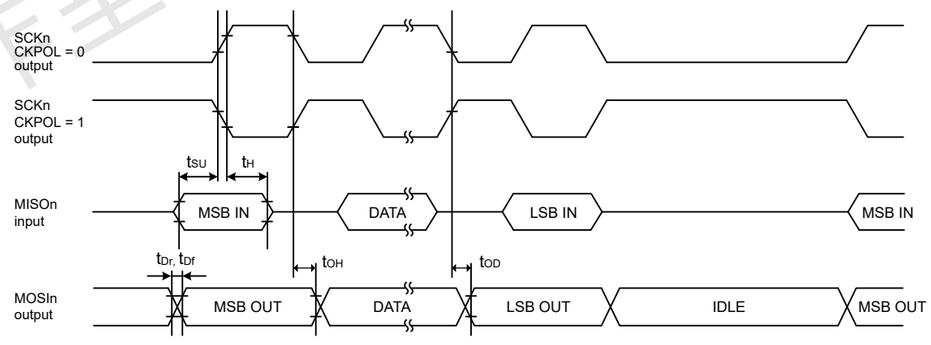

Note: n = 0 to 4, 9

Figure 2.29 CKPH=1时主机的SCI简单SPI模式时序

RA生态工作室

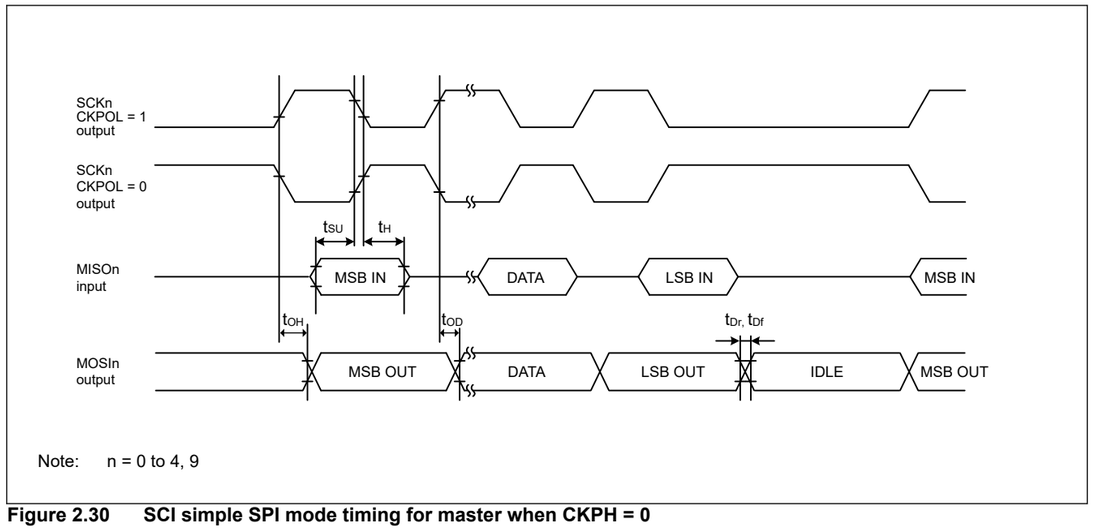

Figure 2.30 SCI simple SPI mode timing for master when CKPH = 0

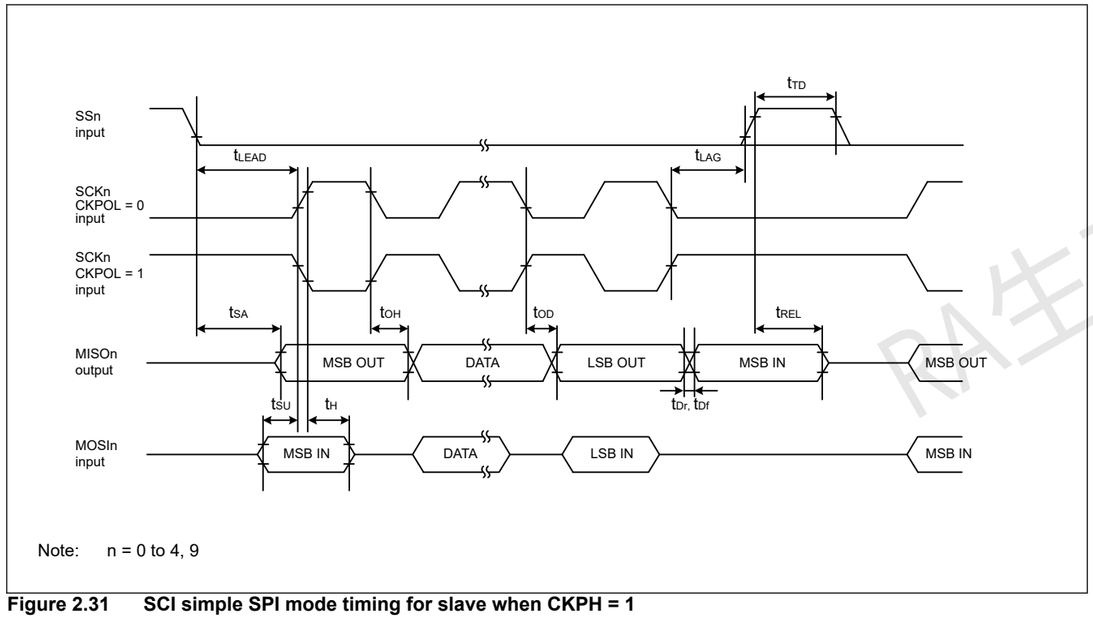

Figure 2.31 SCI simple SPI mode timing for slave when CKPH = 1

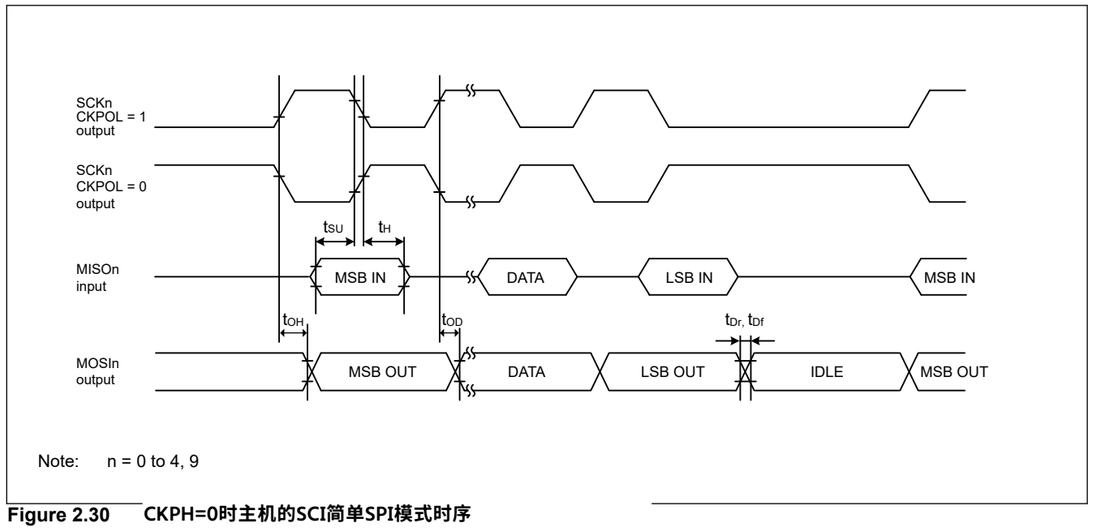

Figure 2.30 CKPH=0时主机的SCI简单SPI模式时序

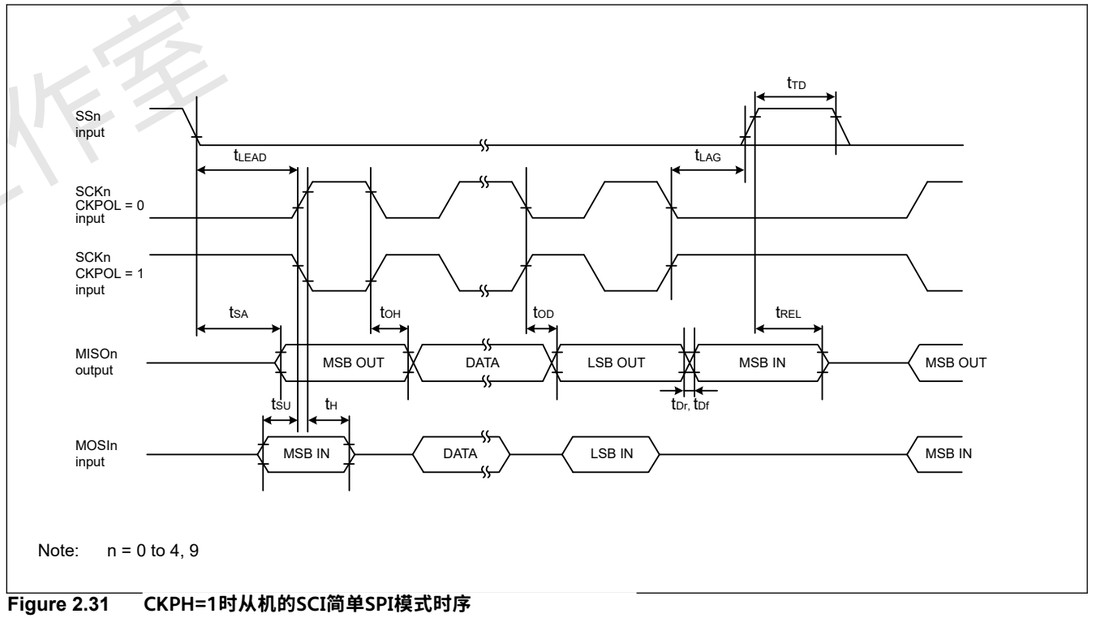

Figure 2.31 CKPH=1时从机的SCI简单SPI模式时序

RA生态工作室

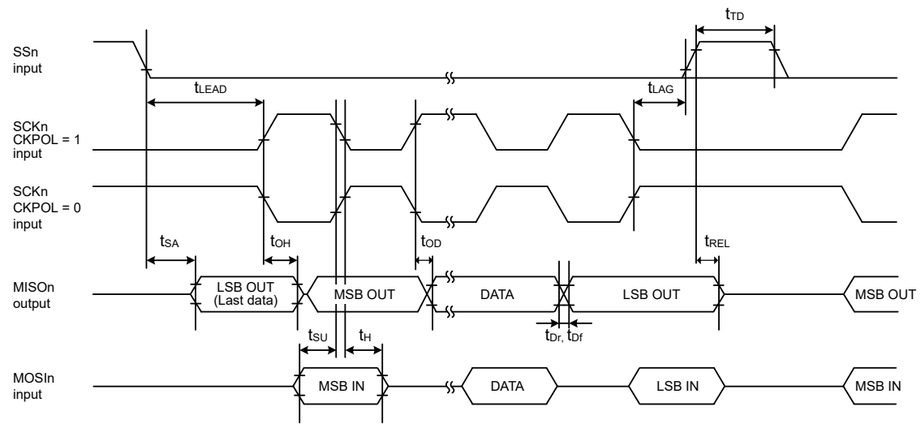

Note: n = 0 to 4, 9

Figure 2.32 SCI simple SPI mode timing for slave when CKPH = 0

Table 2.26 SCI timing (3)

Conditions: Middle drive output is selected in the Port Drive Capability bit in the PmnPFS register.

Parameter		Symbol	Min	Max	Unit	Test conditions
Simple IIC (Standard mode)	SDA input rise time	t_{Sr}	—	1000	ns	Figure 2.33
	SDA input fall time	t_{Sf}	—	300	ns	
	SDA input spike pulse removal time	t_{SP}	0	4 × t_{IICcyc}	ns	
	Data input setup time	t_{SDAS}	250	—	ns	
	Data input hold time	t_{SDAH}	0	—	ns	
	SCL, SDA capacitive load	C_b *1	—	400	pF	
Simple IIC (Fast mode)	SDA input rise time	t_{Sr}	—	300	ns	Figure 2.33
	SDA input fall time	t_{Sf}	—	300	ns	
	SDA input spike pulse removal time	t_{SP}	0	4 × t_{IICcyc}	ns	
	Data input setup time	t_{SDAS}	100	—	ns	
	Data input hold time	t_{SDAH}	0	—	ns	
	SCL, SDA capacitive load	C_b *1	—	400	pF	

Note: t_{IICcyc}: IIC internal reference clock (IICφ) cycle.
Note 1. C_b indicates the total capacity of the bus line.

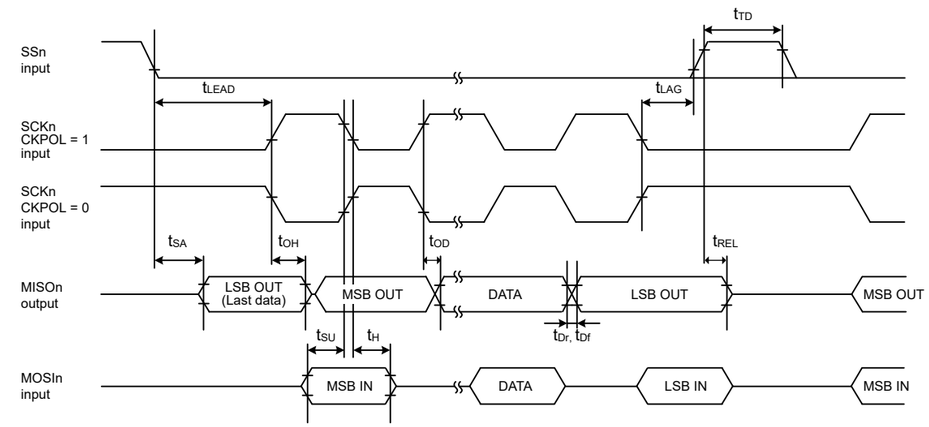

Note: n = 0 to 4, 9

Figure 2.32 CKPH=0时从机的SCI简单SPI模式时序

Table 2.26 SCI时序（3）

条件：在PmnPFS寄存器的端口驱动能力位中选择中间驱动输出。

Parameter		Symbol	Min	Max	Unit	测试条件
Simple IIC (Standard mode)	SDA输入上升时间	t_{Sr}	—	1000	ns	Figure 2.33
	SDA输入下降时间	t_{Sf}	—	300	ns	
	SDA输入尖峰脉冲去除时间	t_{SP}	0	4 × t_{IICcyc}	ns	
	数据输入建立时间	t_{SDAS}	250	—	ns	
	数据输入保持时间	t_{SDAH}	0	—	ns	
	SCL, SDA capacitive load	C_b *1	—	400	pF	
Simple IIC (Fast mode)	SDA输入上升时间	t_{Sr}	—	300	ns	Figure 2.33
	SDA输入下降时间	t_{Sf}	—	300	ns	
	SDA输入尖峰脉冲去除时间	t_{SP}	0	4 × t_{IICcyc}	ns	
	数据输入建立时间	t_{SDAS}	100	—	ns	
	数据输入保持时间	t_{SDAH}	0	—	ns	
	SCL, SDA capacitive load	C_b *1	—	400	pF	

Note: tIICcyc:IIC内部参考时钟(IICφ)周期。
注1.Cb表示公交线路的总容量。

RA生态工作室

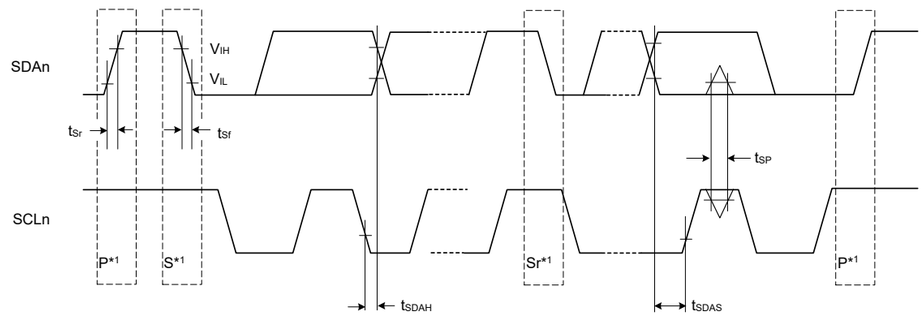

Test conditions:
V_{IH} = VCC × 0.7, V_{IL} = VCC × 0.3
V_{OL} = 0.6 V, I_{OL} = 6 mA

Note: n = 0 to 4, 9
Note 1. S, P, and Sr indicate the following conditions:
S: Start condition
P: Stop condition
Sr: Restart condition

Figure 2.33 SCI simple IIC mode timing

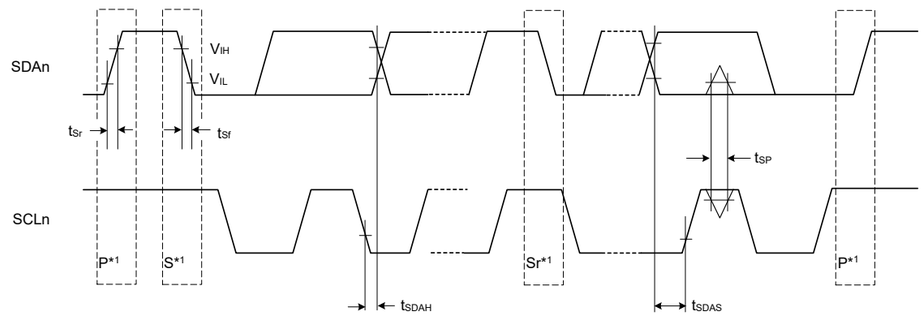

Test conditions:
VIH=VCC×0.7，VIL=VCC×0.3
VOL=0.6V，IOL=6mA

Note: n = 0 to 4, 9
注1.S、P和Sr表示以下条件：
S：开始条件P：
停止条件
Sr：重启条件

Figure 2.33 SCI简单IIC模式时序

RA生态工作室

2.3.9 SPI Timing

Table 2.27 SPI timing

Conditions: High drive output is selected in the Port Drive Capability bit in the PmnPFS register.

Parameter			Symbol	Min	Max	Unit	Test conditions
SPI	RSPCK clock cycle	Master	t_{SPcyc}	2	4096	t_{Pcyc}	Figure 2.34
		Slave		4	4096		
	RSPCK clock high pulse width	Master	t_{SPCKWH}	$(t_{SPcyc} - t_{SPCKr} - t_{SPCKf}) / 2 - 3$	—	ns	
		Slave		0.4	0.6	t_{SPcyc}	
	RSPCK clock low pulse width	Master	t_{SPCKWL}	$(t_{SPcyc} - t_{SPCKr} - t_{SPCKf}) / 2 - 3$	—	ns	
		Slave		0.4	0.6	t_{SPcyc}	
	RSPCK clock rise and fall time	Master	t_{SPCKr}, t_{SPCKf}	—	5	ns	
		Slave		—	1	μs	
	Data input setup time	Master	t_{SU}	4	—	ns	Figure 2.35 to Figure 2.40
		Slave		5	—		
	Data input hold time	Master (PCLKA division ratio set to 1/2)	t_{HF}	0	—	ns	
		Master (PCLKA division ratio set to a value other than 1/2)	t_H	t_{Pcyc}	—		
		Slave	t_H	20	—		
	SSL setup time	Master	t_{LEAD}	$N \times t_{SPcyc} - 10^{*1}$	$N \times t_{SPcyc} + 100^{*1}$	ns	
		Slave		$4 \times t_{Pcyc}$	—	ns	
	SSL hold time	Master	t_{LAG}	$N \times t_{SPcyc} - 10^{*2}$	$N \times t_{SPcyc} + 100^{*2}$	ns	
		Slave		$4 \times t_{Pcyc}$	—	ns	
	Data output delay	Master	t_{OD1}	—	6.3	ns	
			t_{OD2}	—	6.3		
		Slave	t_{OD}	—	20		
	Data output hold time	Master	t_{OH}	0	—	ns	
		Slave		0	—		
	Successive transmission delay	Master	t_{TD}	$t_{SPcyc} + 2 \times t_{Pcyc}$	$8 \times t_{SPcyc} + 2 \times t_{Pcyc}$	ns	
		Slave		$4 \times t_{Pcyc}$			
	MOSI and MISO rise and fall time	Output	t_{Dr}, t_{Df}	—	5	ns	
		Input		—	1	μs	
	SSL rise and fall time	Output	t_{SSLr}, t_{SSLf}	—	5	ns	
		Input		—	1	μs	
	Slave access time		t_{SA}	—	25	ns	Figure 2.39 and Figure 2.40
	Slave output release time		t_{REL}	—	25		

2.3.9 SPI时序

Table 2.27 SPI时序

条件：在PmnPFS寄存器的端口驱动能力位中选择高驱动输出。

Parameter			Symbol	Min	Max	Unit	测试条件
SPI	RSPCK时钟周期	Master	t_{SPcyc}	2	4096	t_{Pcyc}	Figure 2.34
		Slave		4	4096		
	RSPCK时钟高脉冲宽度	Master	t_{SPCKWH}	$(t_{SPcyc} - t_{SPCKr} - t_{SPCKf}) / 2 - 3$	—	ns	
		Slave		0.4	0.6	t_{SPcyc}	
	RSPCK时钟低脉冲宽度	Master	t_{SPCKWL}	$(t_{SPcyc} - t_{SPCKr} - t_{SPCKf}) / 2 - 3$	—	ns	
		Slave		0.4	0.6	t_{SPcyc}	
	RSPCK时钟上升和下降时间	Master	t_{SPCKr}, t_{SPCKf}	—	5	ns	
		Slave		—	1	μs	
	数据输入建立时间	Master	t_{SU}	4	—	ns	图2.35至图2.40
		Slave		5	—		
	数据输入保持时间	主控（PCLKA分频比设置为12）	t_{HF}	0	—	ns	
		主控（PCLKA分频比设置为12以外的值）	t_H	t_{Pcyc}	—		
		Slave	t_H	20	—		
	SSL设置时间	Master	t_{LEAD}	$N \times t_{SPcyc} - 10^{*1}$	$N \times t_{SPcyc} + 100^{*1}$	ns	
		Slave		$4 \times t_{Pcyc}$	—	ns	
	SSL保持时间	Master	t_{LAG}	$N \times t_{SPcyc} - 10^{*2}$	$N \times t_{SPcyc} + 100^{*2}$	ns	
		Slave		$4 \times t_{Pcyc}$	—	ns	
	数据输出延迟	Master	t_{OD1}	—	6.3	ns	
			t_{OD2}	—	6.3		
		Slave	t_{OD}	—	20		
	数据输出保持时间	Master	t_{OH}	0	—	ns	
		Slave		0	—		
	连续传输延迟	Master	t_{TD}	$t_{SPcyc} + 2 \times t_{Pcyc}$	$8 \times t_{SPcyc} + 2 \times t_{Pcyc}$	ns	
		Slave		$4 \times t_{Pcyc}$			
	MOSI和MISO上升和下降时间	Output	t_{Dr}, t_{Df}	—	5	ns	
		Input		—	1	μs	
	SSL上升和下降时间	Output	t_{SSLr}, t_{SSLf}	—	5	ns	
		Input		—	1	μs	
	从站访问时间		t_{SA}	—	25	ns	图2.39和 Figure 2.40
	从机输出释放时间		t_{REL}	—	25		

RA生态工作室

Note: t_{Pcyc}: PCLKA cycle.
Note: Must use pins that have a letter appended to their name, for instance "_A", "_B", to indicate group membership. For the SPI interface, the AC portion of the electrical characteristics is measured for each group.
Note 1. N is set to an integer from 1 to 8 by the SPCKD register.
Note 2. N is set to an integer from 1 to 8 by the SSLND register.

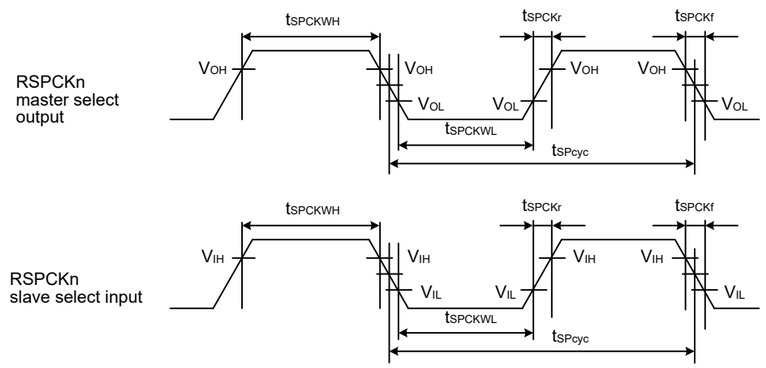

V_{OH} = 0.7 × VCC, V_{OL} = 0.3 × VCC, V_{IH} = 0.7 × VCC, V_{IL} = 0.3 × VCC

Note: n = A

Figure 2.34 SPI clock timing

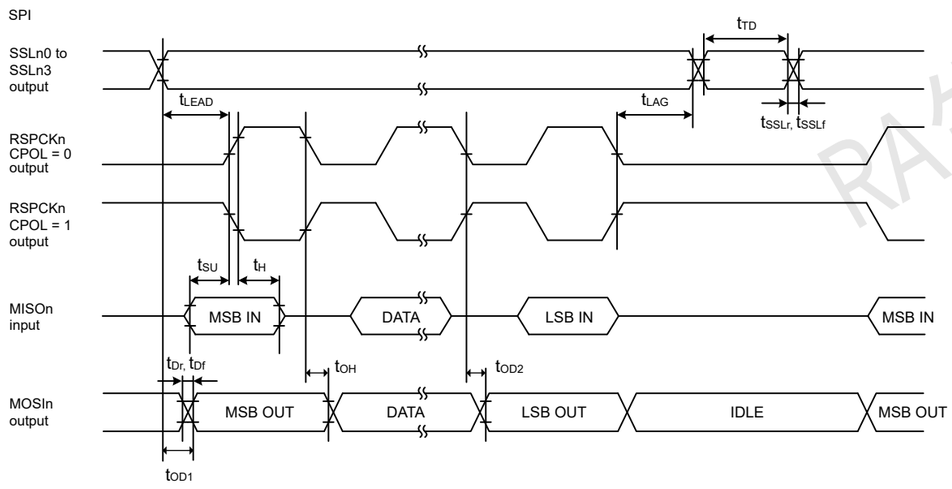

Note: n = A

Figure 2.35 SPI timing for master when CPHA = 0

Note: t_{Pcyc}: PCLKA cycle.
Note: 必须使用名称后附有字母的引脚，例如"_A"、"_B"，以表示组成员身份。对于SPI接口，测量每组的电气特性的交流部分。

注1.N由SPCKD寄存器设置为1到8的整数。注2.N由SSLND寄存器设置为1到8的整数。

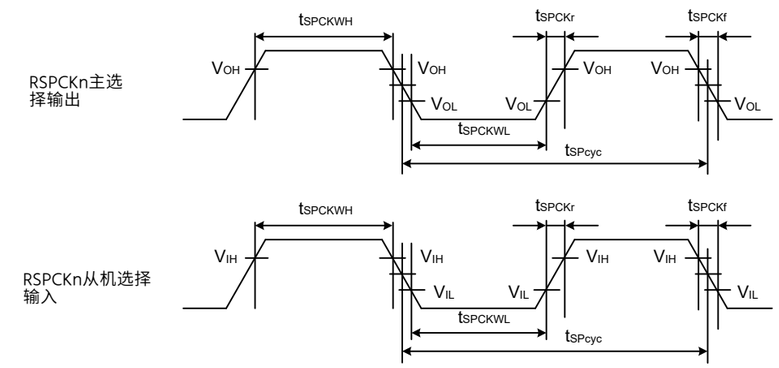

VOH=0.7×VCC，VOL=0.3×VCC，VIH=0.7×VCC，VIL=0.3×VCC

Note: n = A

Figure 2.34 SPI时钟时序

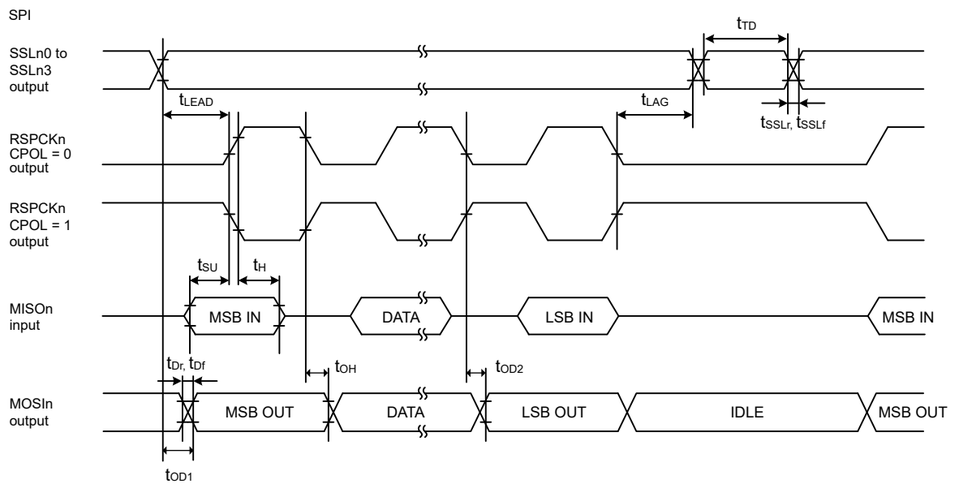

Note: n = A

Figure 2.35 CPHA=0时主机的SPI时序

RA生态工作室

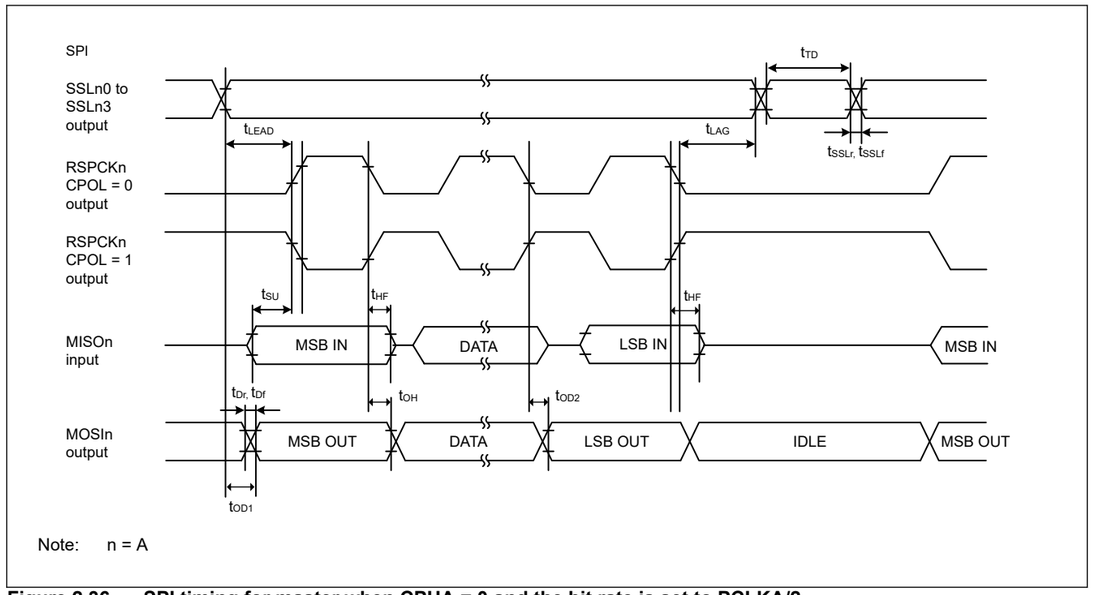

Figure 2.36 SPI timing for master when CPHA = 0 and the bit rate is set to PCLKA/2

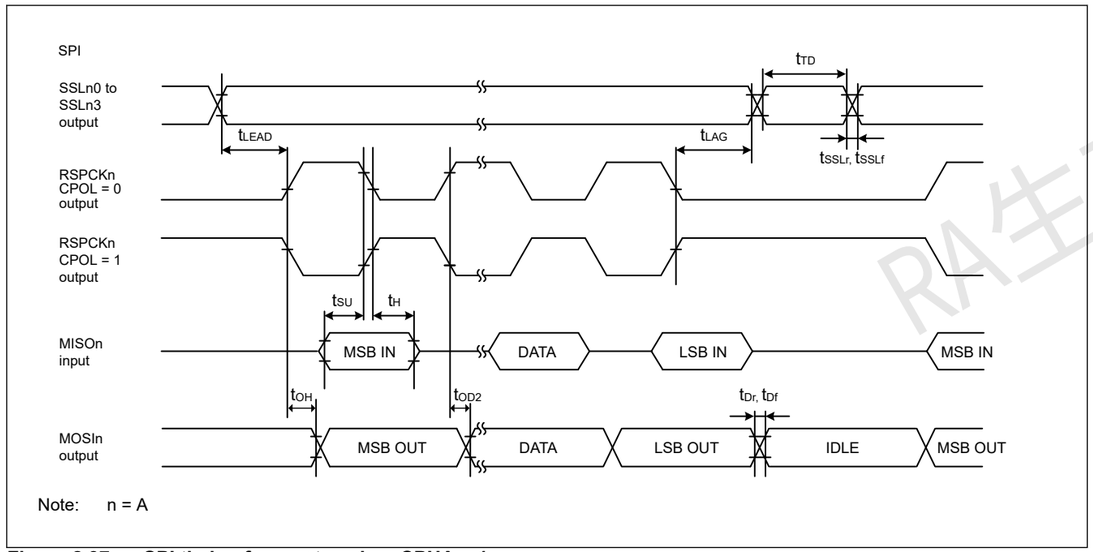

Figure 2.37 SPI timing for master when CPHA = 1

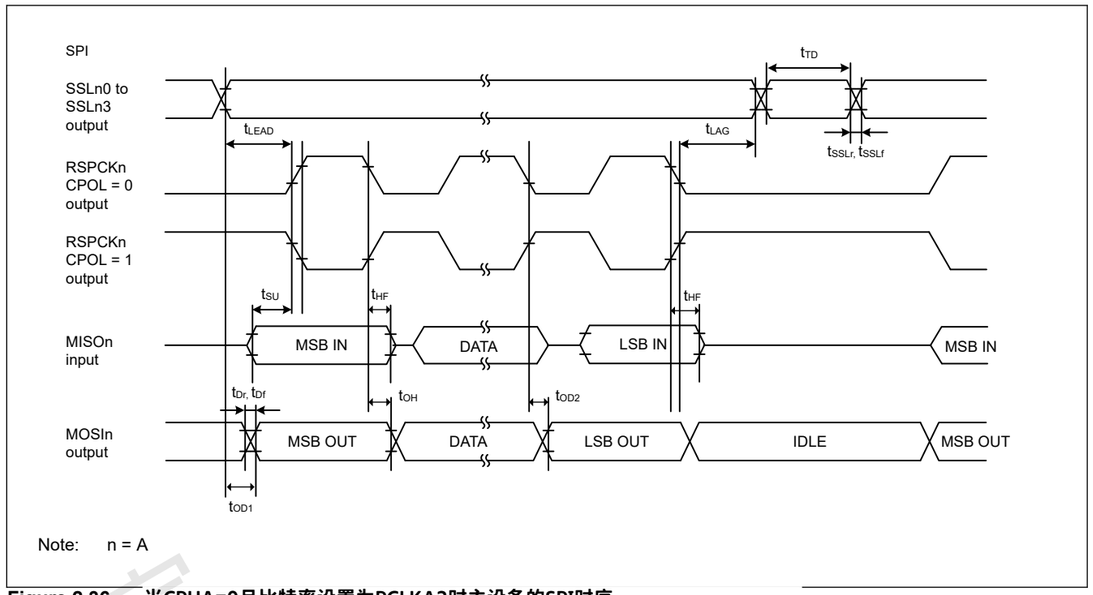

Figure 2.36 当CPHA=0且比特率设置为PCLKA2时主设备的SPI时序

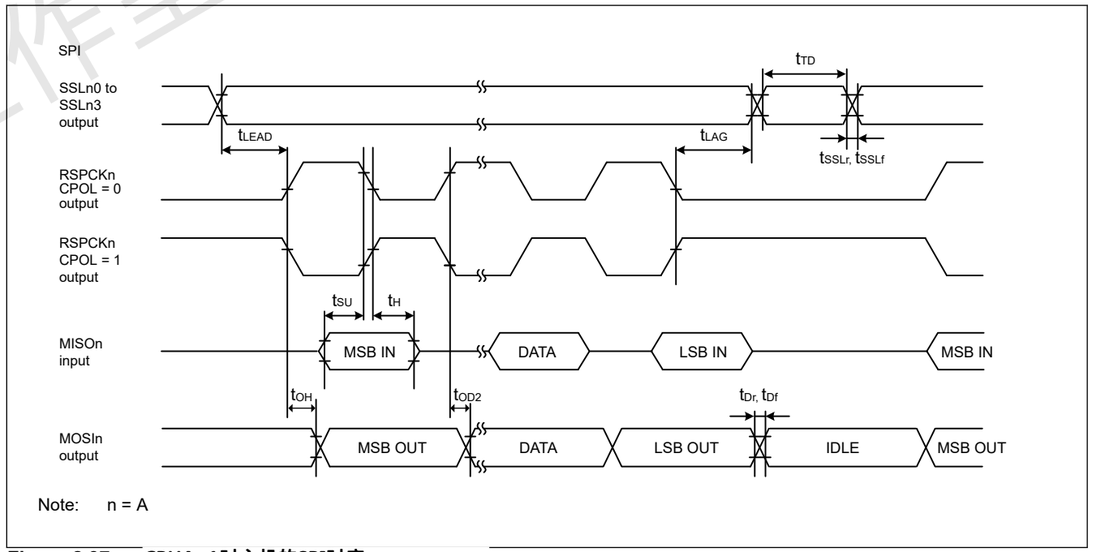

Figure 2.37 CPHA=1时主机的SPI时序

RA生态工作室

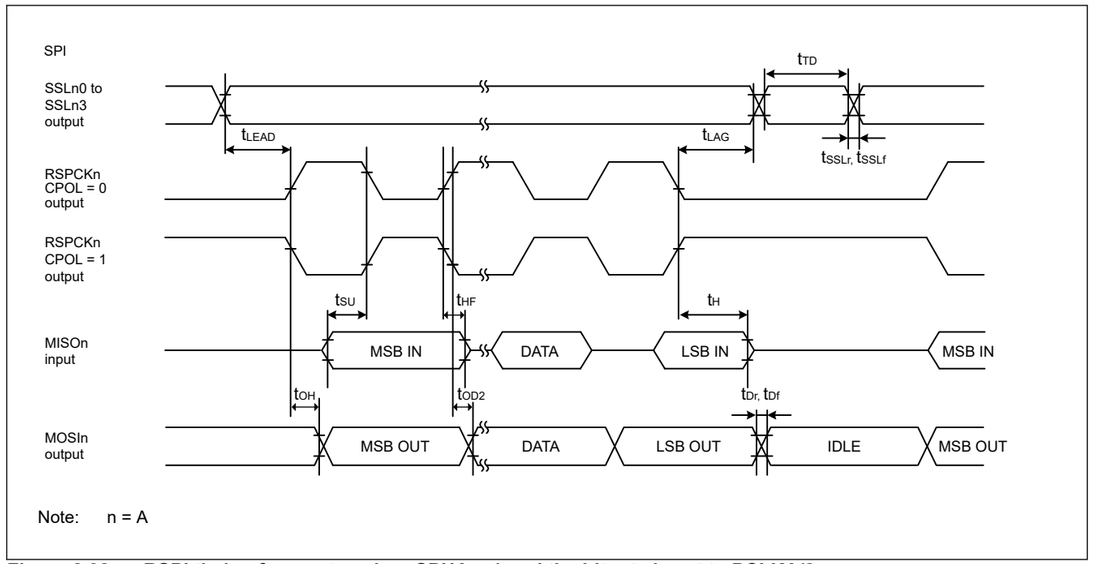

Figure 2.38 RSPI timing for master when CPHA = 1 and the bit rate is set to PCLKA/2

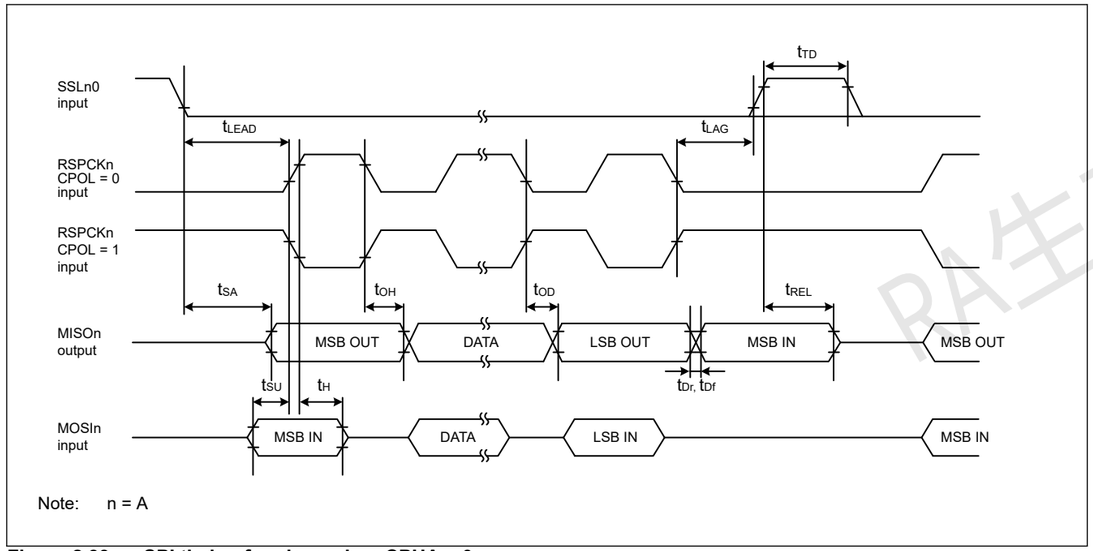

Figure 2.39 SPI timing for slave when CPHA = 0

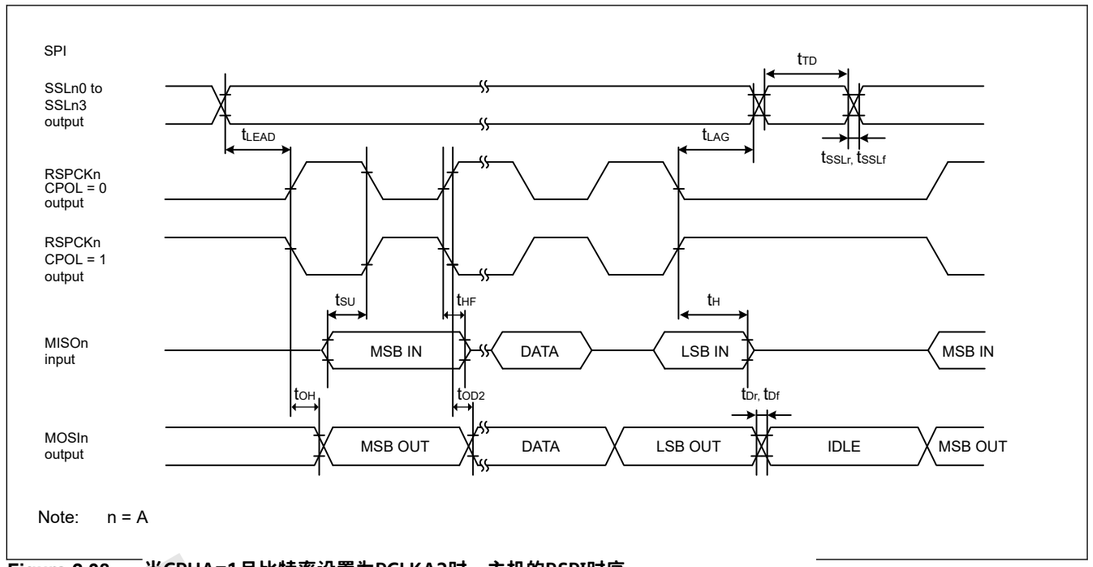

Figure 2.38 当CPHA=1且比特率设置为PCLKA2时，主机的RSPI时序

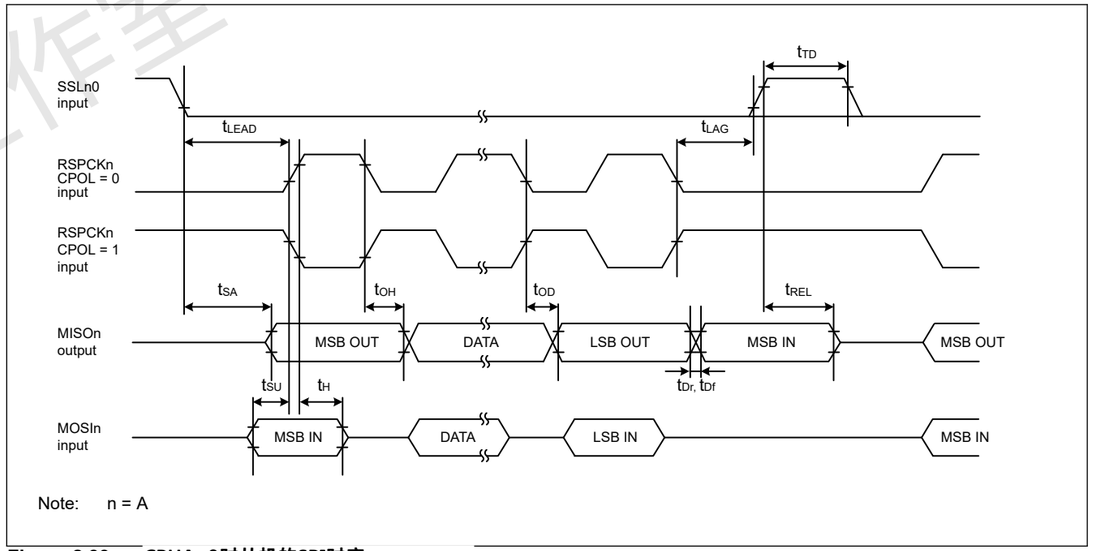

Figure 2.39 CPHA=0时从机的SPI时序

RA生态工作室

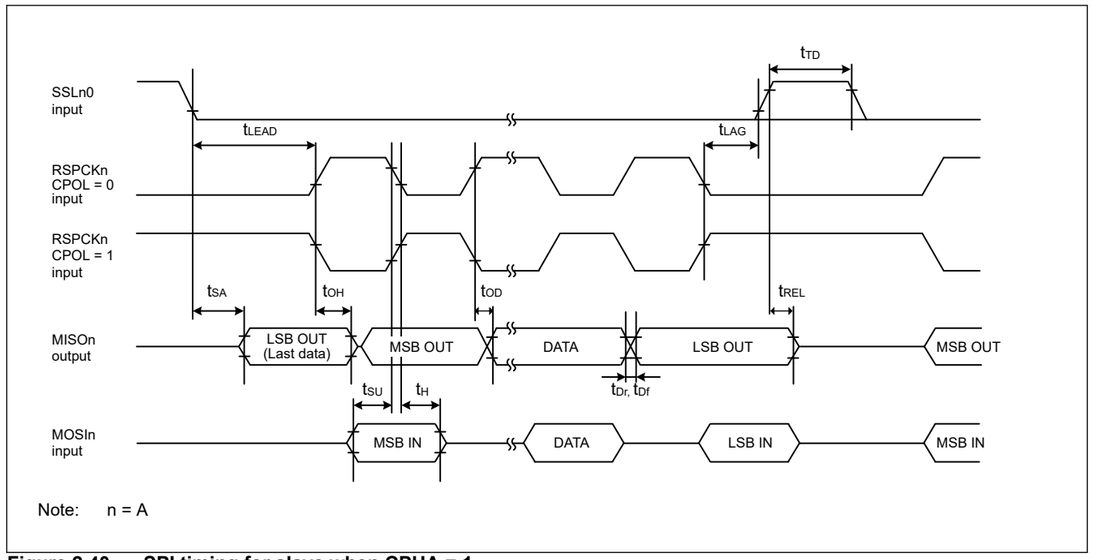

Figure 2.40 SPI timing for slave when CPHA = 1

2.3.10 QSPI Timing

Table 2.28 QSPI timing

Conditions: High drive output is selected in the Port Drive Capability bit in the PmnPFS register.

Parameter		Symbol	Min	Max	Unit	Test conditions
QSPI	QSPCK clock cycle	t_{QScyc}	2	48	t_{Pcyc}	Figure 2.41
	QSPCK clock high pulse width	t_{QSWH}	t_{QScyc} × 0.4	—	ns	
	QSPCK clock low pulse width	t_{QSWL}	t_{QScyc} × 0.4	—	ns	
	Data input setup time	t_{Su}	10	—	ns	Figure 2.42
	Data input hold time	t_{IH}	0	—	ns	
	QSSL setup time	t_{LEAD}	(N + 0.5) × t_{Qscyc} - 5*1	(N + 0.5) × t_{Qscyc} + 100*1	ns	
	QSSL hold time	t_{LAG}	(N + 0.5) × t_{Qscyc} - 5*2	(N + 0.5) × t_{Qscyc} + 100*2	ns	
	Data output delay	t_{OD}	—	4	ns	
	Data output hold time	t_{OH}	–3.3	—	ns	
	Successive transmission delay	t_{TD}	1	16	t_{QScyc}	

Note: t_{Pcyc}: PCLKA cycle.
Note 1. N is set to 0 or 1 in SFMSLD.
Note 2. N is set to 0 or 1 in SFMSHD.

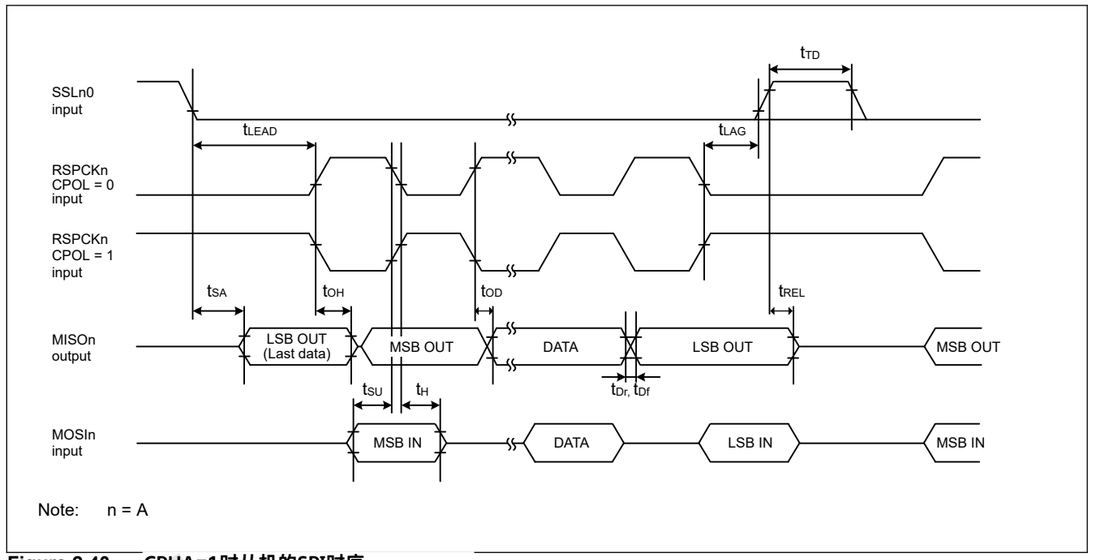

Figure 2.40 CPHA=1时从机的SPI时序

2.3.10 QSPI Timing

Table 2.28 QSPI timing

条件：在PmnPFS寄存器的端口驱动能力位中选择高驱动输出。

Parameter		Symbol	Min	Max	Unit	测试条件
QSPI	QSPCK时钟周期	t_{QScyc}	2	48	t_{Pcyc}	Figure 2.41
	QSPCK时钟高脉冲宽度	t_{QSWH}	t_{QScyc} × 0.4	—	ns	
	QSPCK时钟低脉冲宽度	t_{QSWL}	t_{QScyc} × 0.4	—	ns	
	数据输入建立时间	t_{Su}	10	—	ns	Figure 2.42
	数据输入保持时间	t_{IH}	0	—	ns	
	QSSL设置时间	t_{LEAD}	(N + 0.5) × t_{Qscyc} - 5*1	(N + 0.5) × t_{Qscyc} + 100*1	ns	
	QSSL保持时间	t_{LAG}	(N + 0.5) × t_{Qscyc} - 5*2	(N + 0.5) × t_{Qscyc} + 100*2	ns	
	数据输出延迟	t_{OD}	—	4	ns	
	数据输出保持时间	t_{OH}	–3.3	—	ns	
	连续传输延迟	t_{TD}	1	16	t_{QScyc}	

Note: t_{Pcyc}: PCLKA cycle.
注1.在SFMSLD中N设置为0或1。注2.在SFMSHD中N设置为0或1。

RA生态工作室

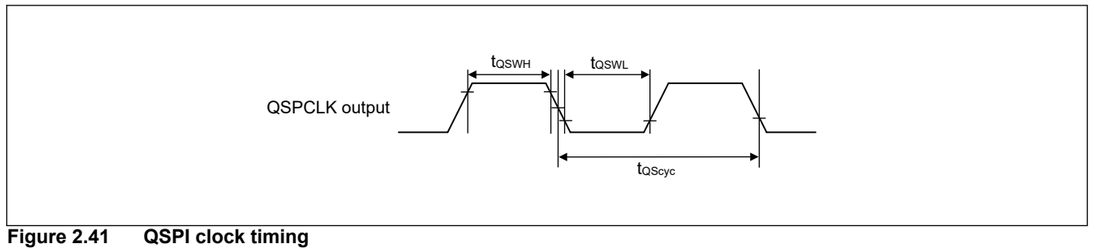

Figure 2.41 QSPI clock timing

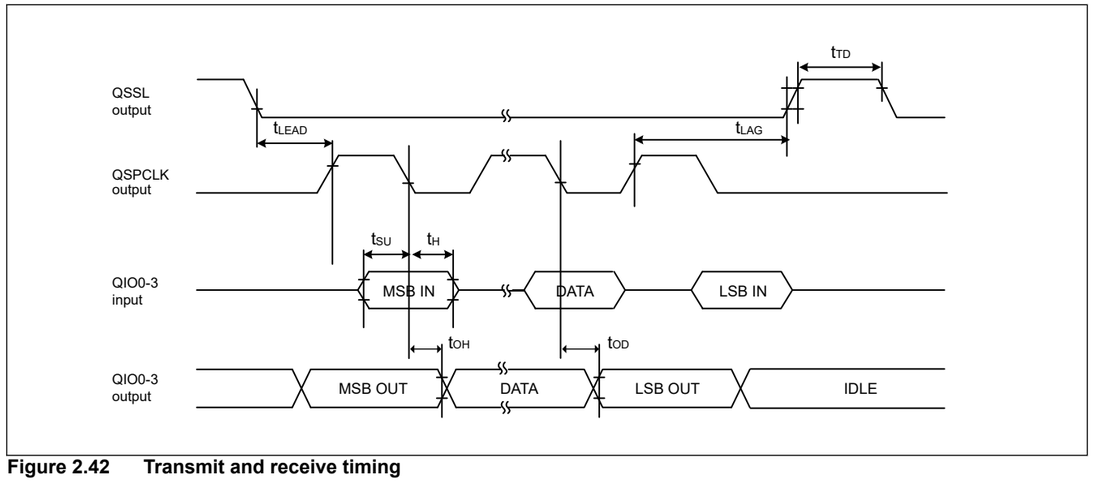

Figure 2.42 Transmit and receive timing

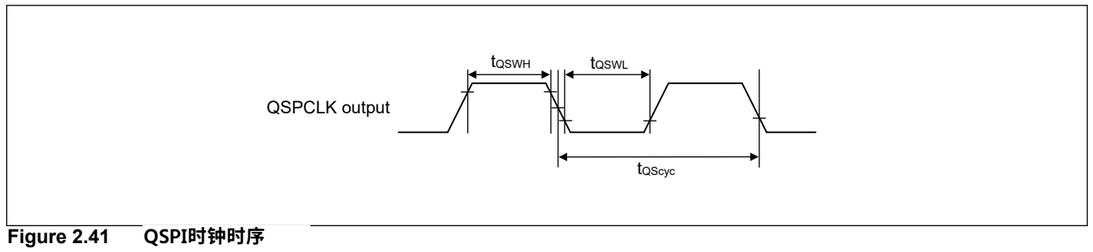

Figure 2.41 QSPI时钟时序

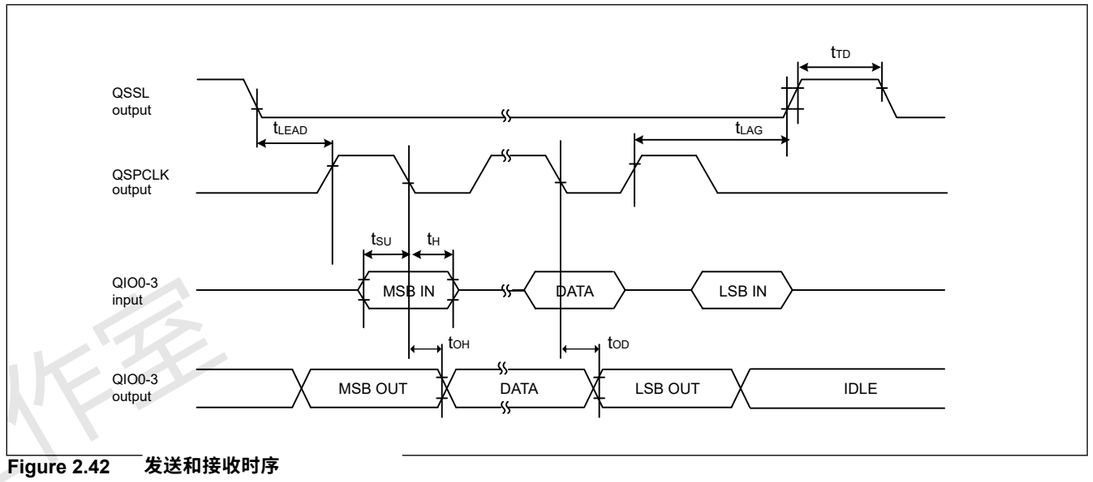

Figure 2.42 发送和接收时序

RA生态工作室

2.3.11 IIC Timing

Table 2.29 IIC timing (1) (1 of 2)

(1) Conditions: Middle drive output is selected in the Port Drive Capability bit in the PmnPFS register for the following pins: SDA0_B, SCL0_B, SDA1_B, SCL1_B.
(2) The following pins do not require setting: SCL0_A, SDA0_A.
(3) Use pins that have a letter appended to their names, for instance "_A" or "_B", to indicate group membership. For the IIC interface, the AC portion of the electrical characteristics is measured for each group.

Parameter		Symbol	Min	Max	Unit	Test conditions
IIC (Standard mode, SMBus) ICFER.FMPE = 0	SCL input cycle time	t_{SCL}	6 (12) × t_{IICcyc} + 1300	—	ns	Figure 2.43
	SCL input high pulse width	t_{SCLH}	3 (6) × t_{IICcyc} + 300	—	ns	
	SCL input low pulse width	t_{SCLL}	3 (6) × t_{IICcyc} + 300	—	ns	
	SCL, SDA rise time	t_{Sr}	—	1000	ns	
	SCL, SDA fall time	t_{Sf}	—	300	ns	
	SCL, SDA input spike pulse removal time	t_{SP}	0	1 (4) × t_{IICcyc}	ns	
	SDA input bus free time when wakeup function is disabled	t_{BUF}	3 (6) × t_{IICcyc} + 300	—	ns	
	SDA input bus free time when wakeup function is enabled	t_{BUF}	3 (6) × t_{IICcyc} + 4 × t_{Pcyc} + 300	—	ns	
	START condition input hold time when wakeup function is disabled	t_{STAH}	t_{IICcyc} + 300	—	ns	
	START condition input hold time when wakeup function is enabled	t_{STAH}	1 (5) × t_{IICcyc} + t_{Pcyc} + 300	—	ns	
	Repeated START condition input setup time	t_{STAS}	1000	—	ns	
	STOP condition input setup time	t_{STOS}	1000	—	ns	
	Data input setup time	t_{SDAS}	t_{IICcyc} + 50	—	ns	
	Data input hold time	t_{SDAH}	0	—	ns	
	SCL, SDA capacitive load	C_b *2	—	400	pF	

2.3.11 IIC Timing

Table 2.29 IIC时序(1)(1of2)

(1)条件：在PmnPFS寄存器的端口驱动能力位中为以下引脚选择中间驱动输出：SDA0_B、SCL0_B、SDA1_B、SCL1_B。(2)以下引脚不需要设置：SCL0_A、SDA0_A。(3)使用名称后附有字母的图钉，例如"_A"或"_B"，表示组成员身份。对于IIC接口，测量每组的电气特性的交流部分。

Parameter		Symbol	Min	Max	Unit	测试条件
IIC (Standard mode, SMBus) ICFER.FMPE = 0	SCL输入周期时间	t_{SCL}	6 (12) × t_{IICcyc} + 1300	—	ns	Figure 2.43
	SCL输入高脉冲宽度	t_{SCLH}	3 (6) × t_{IICcyc} + 300	—	ns	
	SCL输入低脉冲宽度	t_{SCLL}	3 (6) × t_{IICcyc} + 300	—	ns	
	SCL、SDA上升时间	t_{Sr}	—	1000	ns	
	SCL、SDA下降时间	t_{Sf}	—	300	ns	
	SCL、SDA输入尖峰脉冲去除时间	t_{SP}	0	1 (4) × t_{IICcyc}	ns	
	禁用唤醒功能时的SDA输入总线空闲时间	t_{BUF}	3 (6) × t_{IICcyc} + 300	—	ns	
	唤醒功能启用时SDA输入总线空闲时间	t_{BUF}	3 (6) × t_{IICcyc} + 4 × t_{Pcyc} + 300	—	ns	
	禁用唤醒功能时的START条件输入保持时间	t_{STAH}	t_{IICcyc} + 300	—	ns	
	启用唤醒功能时的START条件输入保持时间	t_{STAH}	1 (5) × t_{IICcyc} + t_{Pcyc} + 300	—	ns	
	重复启动条件输入建立时间	t_{STAS}	1000	—	ns	
	STOP条件输入建立时间	t_{STOS}	1000	—	ns	
	数据输入建立时间	t_{SDAS}	t_{IICcyc} + 50	—	ns	
	数据输入保持时间	t_{SDAH}	0	—	ns	
	SCL, SDA capacitive load	C_b *2	—	400	pF	

RA生态工作室

Table 2.29 IIC timing (1) (2 of 2)

(1) Conditions: Middle drive output is selected in the Port Drive Capability bit in the PmnPFS register for the following pins: SDA0_B, SCL0_B, SDA1_B, SCL1_B.
(2) The following pins do not require setting: SCL0_A, SDA0_A.
(3) Use pins that have a letter appended to their names, for instance "_A" or "_B", to indicate group membership. For the IIC interface, the AC portion of the electrical characteristics is measured for each group.

Parameter		Symbol	Min	Max	Unit	Test conditions
IIC (Fast mode)	SCL input cycle time	t_{SCL}	6 (12) × t_{IICcyc} + 600	—	ns	Figure 2.43
	SCL input high pulse width	t_{SCLH}	3 (6) × t_{IICcyc} + 300	—	ns	
	SCL input low pulse width	t_{SCLL}	3 (6) × t_{IICcyc} + 300	—	ns	
	SCL, SDA rise time	t_{Sr}	20 × (external pullup voltage/5.5V)*1	300	ns	
	SCL, SDA fall time	t_{Sf}	20 × (external pullup voltage/5.5V)*1	300	ns	
	SCL, SDA input spike pulse removal time	t_{SP}	0	1 (4) × t_{IICcyc}	ns	
	SDA input bus free time when wakeup function is disabled	t_{BUF}	3 (6) × t_{IICcyc} + 300	—	ns	
	SDA input bus free time when wakeup function is enabled	t_{BUF}	3 (6) × t_{IICcyc} + 4 × t_{Pcyc} + 300	—	ns	
	START condition input hold time when wakeup function is disabled	t_{STAH}	t_{IICcyc} + 300	—	ns	
	START condition input hold time when wakeup function is enabled	t_{STAH}	1 (5) × t_{IICcyc} + t_{Pcyc} + 300	—	ns	
	Repeated START condition input setup time	t_{STAS}	300	—	ns	
	STOP condition input setup time	t_{STOS}	300	—	ns	
	Data input setup time	t_{SDAS}	t_{IICcyc} + 50	—	ns	
	Data input hold time	t_{SDAH}	0	—	ns	
	SCL, SDA capacitive load	C_b*2	—	400	pF	

Note: t_{IICcyc}: IIC internal reference clock (IICφ) cycle, t_{Pcyc}: PCLKB cycle.
Note: Values in parentheses apply when ICMR3.NF[1:0] is set to 11b while the digital filter is enabled with ICFER.NFE set to 1.
Note: Must use pins that have a letter appended to their name, for instance "_A", "_B", to indicate group membership. For the IIC interface, the AC portion of the electrical characteristics is measured for each group.
Note 1. Only supported for SCL0_A and SDA0_A.
Note 2. Cb indicates the total capacity of the bus line.

Table 2.29 IIC时序(1)(2of2)

(1)条件：在PmnPFS寄存器的端口驱动能力位中为以下引脚选择中间驱动输出：SDA0_B、SCL0_B、SDA1_B、SCL1_B。(2)以下引脚不需要设置：SCL0_A、SDA0_A。(3)使用名称后附有字母的图钉，例如"_A"或"_B"，表示组成员身份。对于IIC接口，测量每组的电气特性的交流部分。

Parameter		Symbol	Min	Max	Unit	测试条件
IIC (Fast mode)	SCL输入周期时间	t_{SCL}	6 (12) × t_{IICcyc} + 600	—	ns	Figure 2.43
	SCL输入高脉冲宽度	t_{SCLH}	3 (6) × t_{IICcyc} + 300	—	ns	
	SCL输入低脉冲宽度	t_{SCLL}	3 (6) × t_{IICcyc} + 300	—	ns	
	SCL、SDA上升时间	t_{Sr}	20 × (external pullup voltage/5.5V)*1	300	ns	
	SCL、SDA下降时间	t_{Sf}	20 × (external pullup voltage/5.5V)*1	300	ns	
	SCL、SDA输入尖峰脉冲去除时间	t_{SP}	0	1 (4) × t_{IICcyc}	ns	
	禁用唤醒功能时的SDA输入总线空闲时间	t_{BUF}	3 (6) × t_{IICcyc} + 300	—	ns	
	唤醒功能启用时SDA输入总线空闲时间	t_{BUF}	3 (6) × t_{IICcyc} + 4 × t_{Pcyc} + 300	—	ns	
	禁用唤醒功能时的START条件输入保持时间	t_{STAH}	t_{IICcyc} + 300	—	ns	
	启用唤醒功能时的START条件输入保持时间	t_{STAH}	1 (5) × t_{IICcyc} + t_{Pcyc} + 300	—	ns	
	重复启动条件输入建立时间	t_{STAS}	300	—	ns	
	STOP条件输入建立时间	t_{STOS}	300	—	ns	
	数据输入建立时间	t_{SDAS}	t_{IICcyc} + 50	—	ns	
	数据输入保持时间	t_{SDAH}	0	—	ns	
	SCL, SDA capacitive load	C_b*2	—	400	pF	

Note: tIICcyc：IIC内部参考时钟(IICφ)周期，tPcyc：PCLKB周期。
Note: 当ICMR3.NF[1:0]设置为11b且数字滤波器启用且ICFER.NFE设置为1时，括号中的值适用。
Note: 必须使用名称后附有字母的引脚，例如"_A"、"_B"，以表示组成员身份。对于IIC接口，测量每组的电气特性的交流部分。

注1.仅支持SCL0_A和SDA0_A。
注2.Cb表示公交线路的总容量。

RA生态工作室

Table 2.30 IIC timing (2)

Setting of the SCL0_A, SDA0_A pins is not required with the Port Drive Capability bit in the PmnPFS register.

Parameter		Symbol	Min	Max	Unit	Test conditions
IIC (Fast-mode+) ICFER.FMPE = 1	SCL input cycle time	t_{SCL}	6 (12) × t_{IICcyc} + 240	—	ns	Figure 2.43
	SCL input high pulse width	t_{SCLH}	3 (6) × t_{IICcyc} + 120	—	ns	
	SCL input low pulse width	t_{SCLL}	3 (6) × t_{IICcyc} + 120	—	ns	
	SCL, SDA rise time	t_{Sr}	—	120	ns	
	SCL, SDA fall time	t_{Sf}	20 × (external pullup voltage/ 5.5V)	120	ns	
	SCL, SDA input spike pulse removal time	t_{SP}	0	1 (4) × tIICcyc	ns	
	SDA input bus free time when wakeup function is disabled	t_{BUF}	3 (6) × t_{IICcyc} + 120	—	ns	
	SDA input bus free time when wakeup function is enabled	t_{BUF}	3 (6) × t_{IICcyc} + 4 × t_{Pcyc} + 120	—	ns	
	Start condition input hold time when wakeup function is disabled	t_{STAH}	t_{IICcyc} + 120	—	ns	
	START condition input hold time when wakeup function is enabled	t_{STAH}	1 (5) × t_{IICcyc} + t_{Pcyc} + 120	—	ns	
	Restart condition input setup time	t_{STAS}	120	—	ns	
	Stop condition input setup time	t_{STOS}	120	—	ns	
	Data input setup time	t_{SDAS}	t_{IICcyc} + 30	—	ns	
	Data input hold time	t_{SDAH}	0	—	ns	
	SCL, SDA capacitive load	C_b *1	—	550	pF	

Note: t_{IICcyc}: IIC internal reference clock (IICφ) cycle, t_{Pcyc}: PCLKB cycle.
Note: Values in parentheses apply when ICMR3.NF[1:0] is set to 11b while the digital filter is enabled with ICFER.NFE set to 1.
Note 1. Cb indicates the total capacity of the bus line.

Table 2.30 IIC timing (2)

PmnPFS寄存器中的端口驱动能力位不需要设置SCL0_A、SDA0_A引脚。

Parameter		Symbol	Min	Max	Unit	测试条件
IIC (Fast-mode+) ICFER.FMPE = 1	SCL输入周期时间	t_{SCL}	6 (12) × t_{IICcyc} + 240	—	ns	Figure 2.43
	SCL输入高脉冲宽度	t_{SCLH}	3 (6) × t_{IICcyc} + 120	—	ns	
	SCL输入低脉冲宽度	t_{SCLL}	3 (6) × t_{IICcyc} + 120	—	ns	
	SCL、SDA上升时间	t_{Sr}	—	120	ns	
	SCL、SDA下降时间	t_{Sf}	20 × (external pullup voltage/ 5.5V)	120	ns	
	SCL、SDA输入尖峰脉冲去除时间	t_{SP}	0	1 (4) × tIICcyc	ns	
	禁用唤醒功能时的SDA输入总线空闲时间	t_{BUF}	3 (6) × t_{IICcyc} + 120	—	ns	
	唤醒功能启用时SDA输入总线空闲时间	t_{BUF}	3 (6) × t_{IICcyc} + 4 × t_{Pcyc} + 120	—	ns	
	禁用唤醒功能时的启动条件输入保持时间	t_{STAH}	t_{IICcyc} + 120	—	ns	
	启用唤醒功能时的START条件输入保持时间	t_{STAH}	1 (5) × t_{IICcyc} + t_{Pcyc} + 120	—	ns	
	重启条件输入建立时间	t_{STAS}	120	—	ns	
	停止条件输入建立时间	t_{STOS}	120	—	ns	
	数据输入建立时间	t_{SDAS}	t_{IICcyc} + 30	—	ns	
	数据输入保持时间	t_{SDAH}	0	—	ns	
	SCL, SDA capacitive load	C_b *1	—	550	pF	

Note: tIICcyc：IIC内部参考时钟(IICφ)周期，tPcyc：PCLKB周期。
Note: 当ICMR3.NF[1:0]设置为11b且数字滤波器启用且ICFER.NFE设置为1时，括号中的值适用。
注1.Cb表示总线的总容量。

RA生态工作室

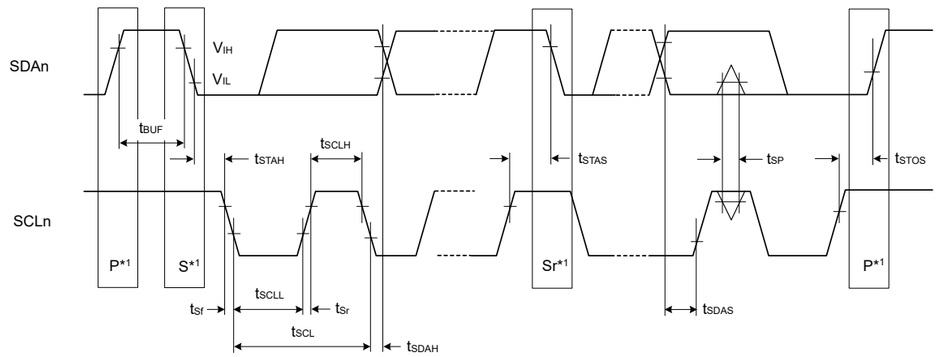

Note 1. S, P, and Sr indicate the following conditions:
S: Start condition
P: Stop condition
Sr: Restart condition

Figure 2.43 I²C bus interface input/output timing

2.3.12 SSIE Timing

Table 2.31 SSIE timing

(1) High drive output is selected with the Port Drive Capability bit in the PmnPFS register.
(2) Use pins that have a letter appended to their names, for instance "_A" or "_B" to indicate group membership. For the SSIE interface, the AC portion of the electrical characteristics is measured for each group.

Parameter			Symbol	Target specification Min.	Target specification Max.	Unit	Comments
SSIBCK0	Cycle	Master	t_O	80	—	ns	Figure 2.44
		Slave	t_I	80	—	ns	
	High level/ low level	Master	t_{HC}/t_{LC}	0.35	—	t_O	
		Slave		0.35	—	t_I	
	Rising time/ falling time	Master	t_{RC}/t_{FC}	—	0.15	t_O / t_I	
		Slave		—	0.15	t_O / t_I	
SSILRCK0/ SSIFS0, SSITXD0, SSIRXD0	Input set up time	Master	t_{SR}	12	—	ns	Figure 2.46, Figure 2.47
		Slave		12	—	ns	
	Input hold time	Master	t_{HR}	8	—	ns	
		Slave		15	—	ns	
	Output delay time	Master	t_{DTR}	-10	5	ns	
		Slave		0	20	ns	Figure 2.46, Figure 2.47
	Output delay time from SSILRCK0/ SSIFS0 change	Slave	t_{DTRW}	—	20	ns	Figure 2.48*1
GTIOC2A, AUDIO_CLK	Cycle		t_{EXcyc}	20	—	ns	Figure 2.45
	High level/ low level		t_{EXL}/t_{EXH}	0.4	0.6	t_{EXcyc}	

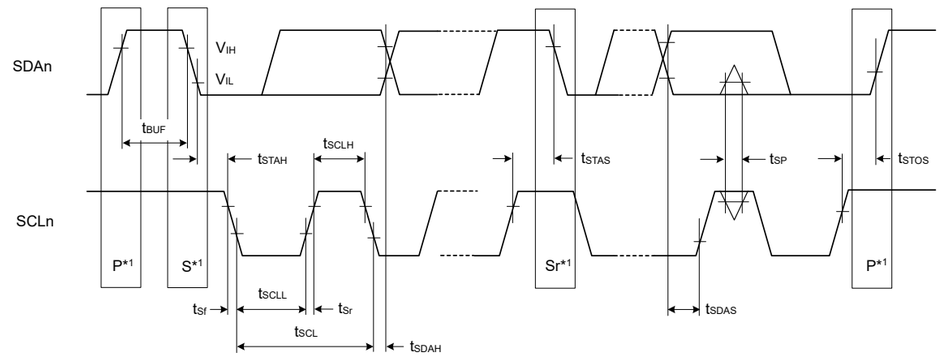

注1.S、P和Sr表示以下条件：
S：开始条件P：
停止条件
Sr：重启条件

Figure 2.43 I2C总线接口输入输出时序

2.3.12 SSIE Timing

Table 2.31 SSIE timing

(1)通过PmnPFS寄存器中的端口驱动能力位选择高驱动输出。(2)使用名称后附有字母的引脚，例如"_A"或"_B"来表示组成员身份。对于SSIE接口，测量每组的电气特性的交流部分。

Parameter			Symbol	目标规格 Min.	目标规格 Max.	Unit	Comments
SSIBCK0	Cycle	Master	t_O	80	—	ns	Figure 2.44
		Slave	t_I	80	—	ns	
	高电平低电平	Master	t_{HC}/t_{LC}	0.35	—	t_O	
		Slave		0.35	—	t_I	
	上升时间下降时间	Master	t_{RC}/t_{FC}	—	0.15	t_O / t_I	
		Slave		—	0.15	t_O / t_I	
SSILRCK0/ SSIFS0, SSITXD0, SSIRXD0	输入建立时间	Master	t_{SR}	12	—	ns	Figure 2.46, Figure 2.47
		Slave		12	—	ns	
	输入保持时间	Master	t_{HR}	8	—	ns	
		Slave		15	—	ns	
	输出延迟时间	Master	t_{DTR}	-10	5	ns	
		Slave		0	20	ns	Figure 2.46, Figure 2.47
	SSILRCK0的输出延迟时间 SSIFS0 change	Slave	t_{DTRW}	—	20	ns	Figure 2.48*1
GTIOC2A, AUDIO_CLK	Cycle		t_{EXcyc}	20	—	ns	Figure 2.45
	高电平低电平		t_{EXL}/t_{EXH}	0.4	0.6	t_{EXcyc}	

RA生态工作室

Note 1. For slave-mode transmission, SSIE has a path, through which the signal input from the SSILRCK0/SSIFS0 pin is used to generate transmit data, and the transmit data is logically output to the SSITXD0 pin.

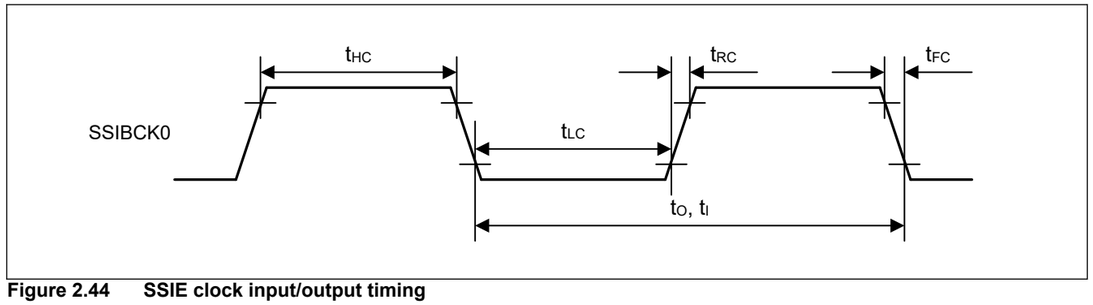

Figure 2.44 SSIE clock input/output timing

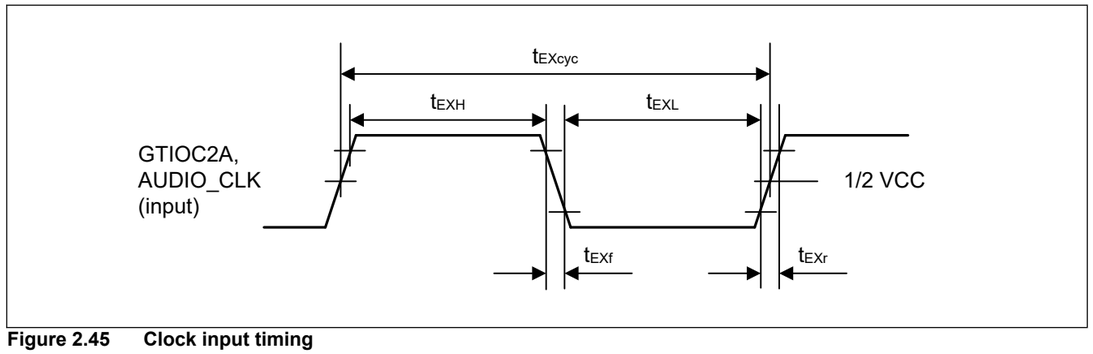

Figure 2.45 Clock input timing

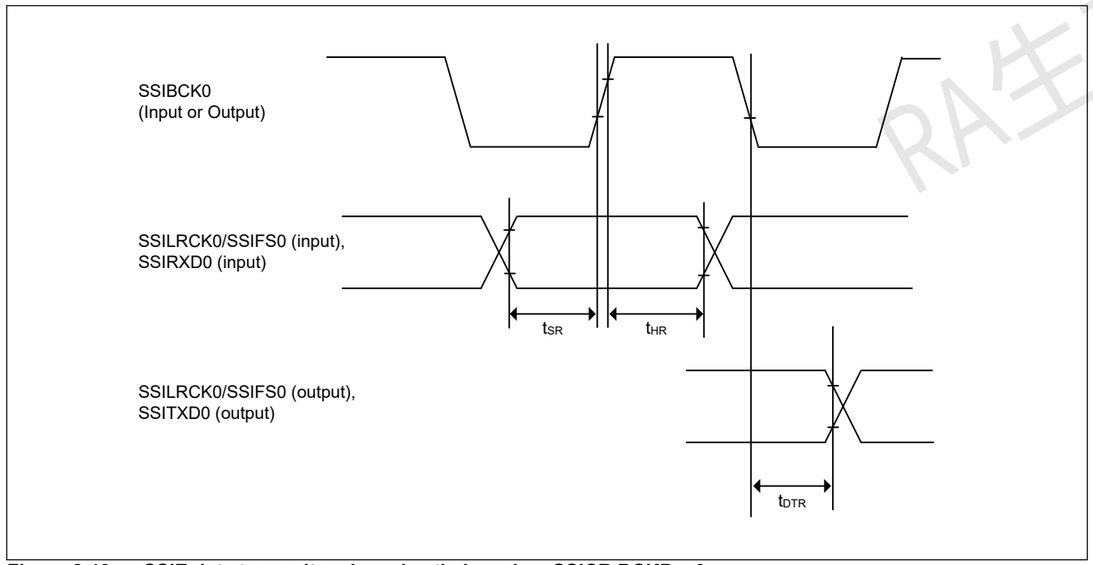

Figure 2.46 SSIE data transmit and receive timing when SSICR.BCKP = 0

注1.对于从模式传输，SSIE有一个路径，通过该路径，从SSILRCK0SSIFS0引脚输入的信号用于生成发送数据，发送数据逻辑输出到SSITXD0引脚。

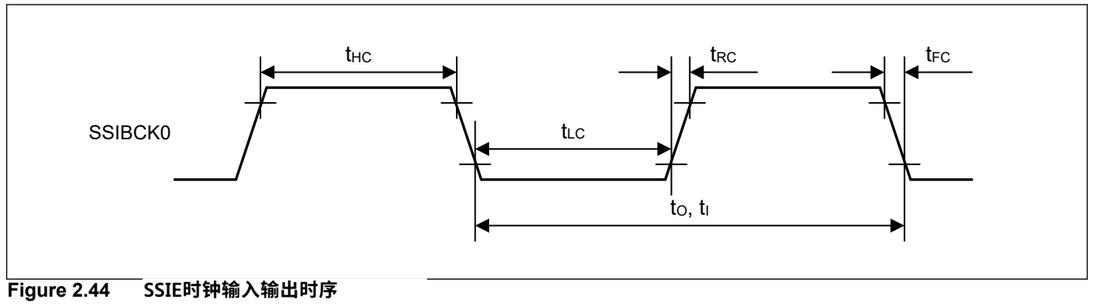

Figure 2.44 SSIE时钟输入输出时序

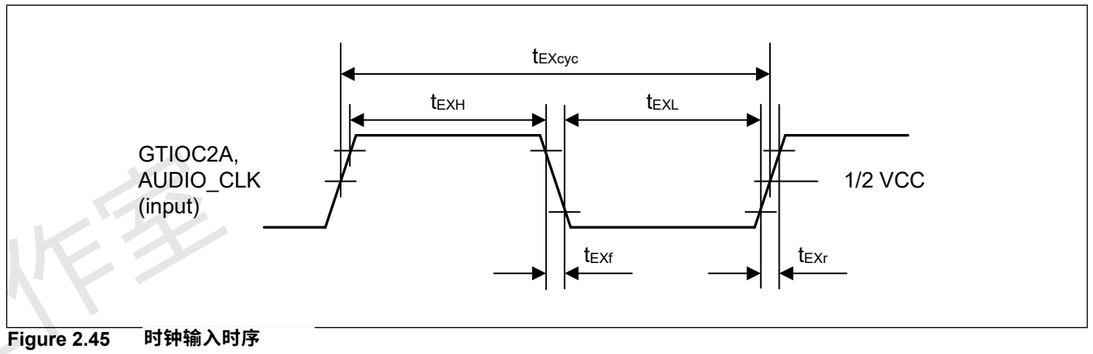

Figure 2.45 时钟输入时序

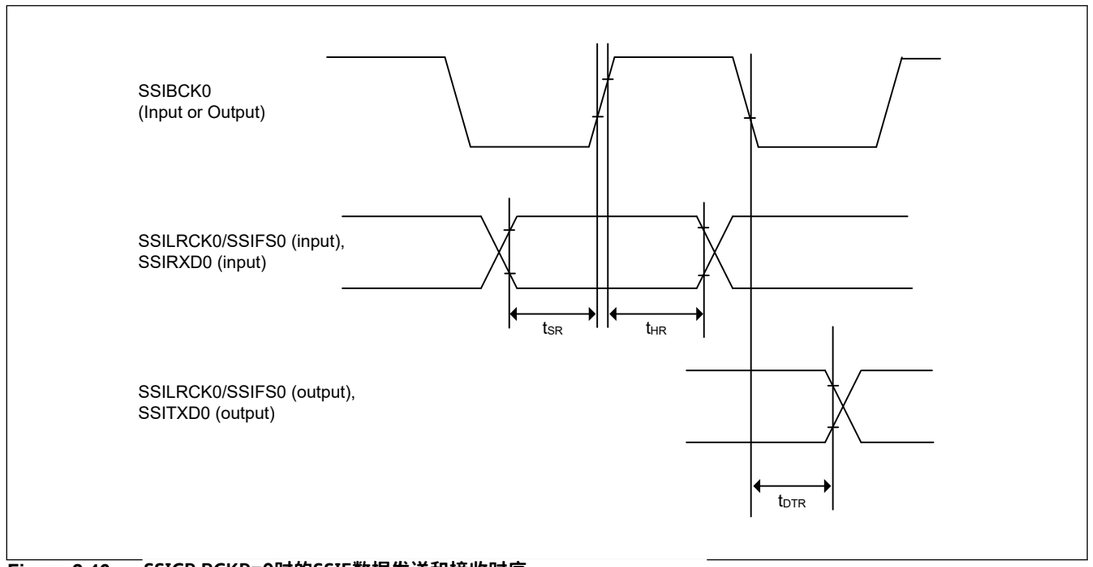

Figure 2.46 SSICR.BCKP=0时的SSIE数据发送和接收时序

RA生态工作室

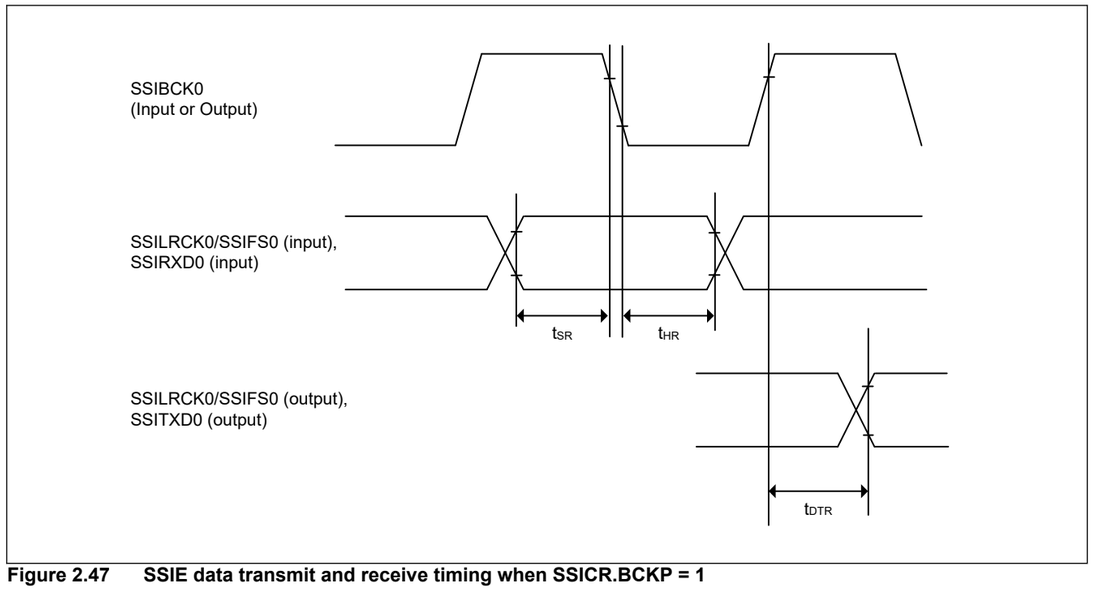

Figure 2.47 SSIE data transmit and receive timing when SSICR.BCKP = 1

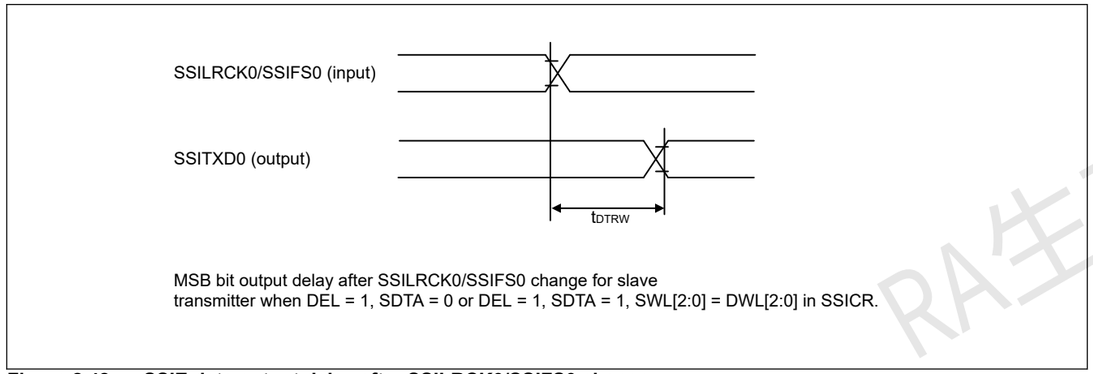

Figure 2.48 SSIE data output delay after SSILRCK0/SSIFS0 change

2.3.13 SD/MMC Host Interface Timing

Table 2.32 SD/MMC Host Interface signal timing

Conditions: High drive output is selected in the Port Drive Capability bit in the PmnPFS register.
Clock duty ratio is 50%.

Parameter	Symbol	Min	Max	Unit	Test conditions
SDCLK clock cycle	T_{SDCYC}	20	—	ns	Figure 2.49
SDCLK clock high pulse width	T_{SDWH}	6.5	—	ns	
SDCLK clock low pulse width	T_{SDWL}	6.5	—	ns	
SDCLK clock rise time	T_{SDLH}	—	3	ns	
SDCLK clock fall time	T_{SDHL}	—	3	ns	
SDCMD/SDDAT output data delay	T_{SDODLY}	–7	4	ns	
SDCMD/SDDAT input data setup	T_{SDIS}	4.5	—	ns	
SDCMD/SDDAT input data hold	T_{SDIH}	1.5	—	ns	

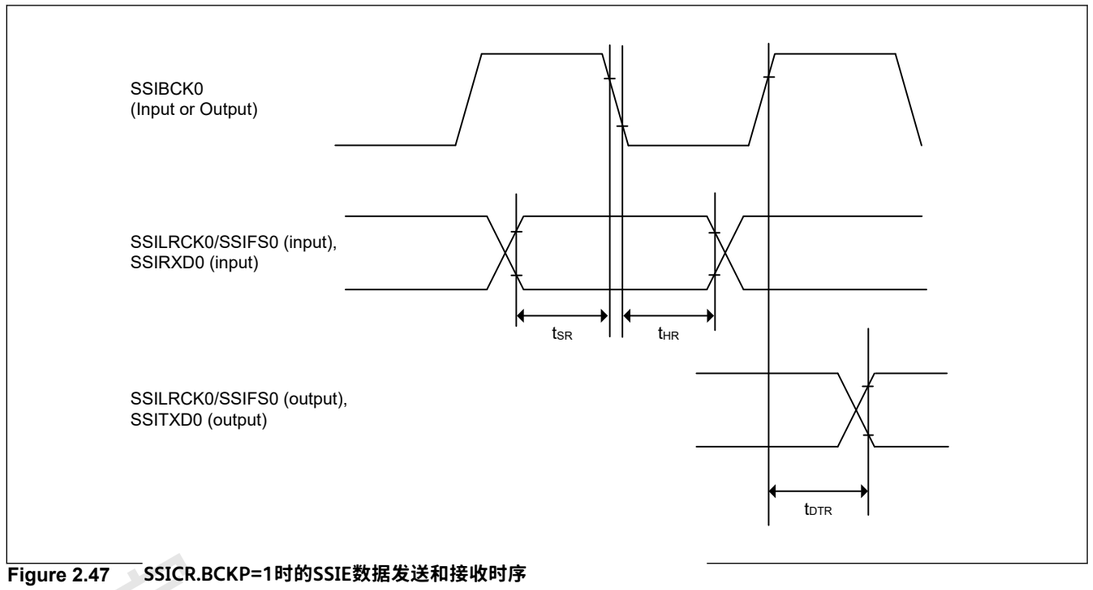

Figure 2.47 SSICR.BCKP=1时的SSIE数据发送和接收时序

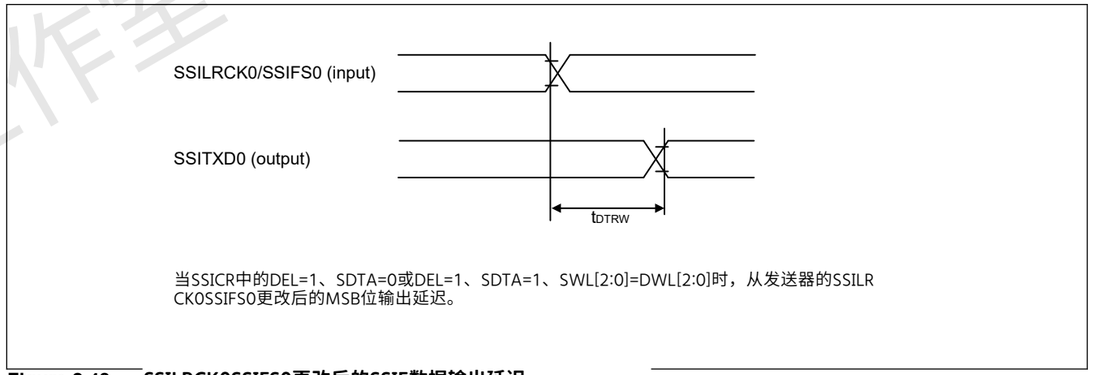

Figure 2.48 SSILRCK0SSIFS0更改后的SSIE数据输出延迟

2.3.13 SDMMC主机接口时序

Table 2.32 SDMMC主机接口信号时序

条件：在PmnPFS寄存器的端口驱动能力位中选择高驱动输出。
时钟占空比为50%。

Parameter	Symbol	Min	Max	Unit	测试条件
SDCLK 时钟周期	T_{SDCYC}	20	—	ns	Figure 2.49
SDCLK 时钟高脉冲宽度	T_{SDWH}	6.5	—	ns	
SDCLK 时钟低脉冲宽度	T_{SDWL}	6.5	—	ns	
SDCLK 时钟上升时间	T_{SDLH}	—	3	ns	
SDCLK 时钟下降时间	T_{SDHL}	—	3	ns	
SDCMDSDDAT输出数据延迟	T_{SDODLY}	–7	4	ns	
SDCMDSDDAT输入数据设置	T_{SDIS}	4.5	—	ns	
SDCMDSDDAT输入数据保持	T_{SDIH}	1.5	—	ns	

RA生态工作室

Note: Must use pins that have a letter appended to their name, for instance "_A", "_B", to indicate group membership. For the SD/MMC Host interface, the AC portion of the electrical characteristics is measured for each group.

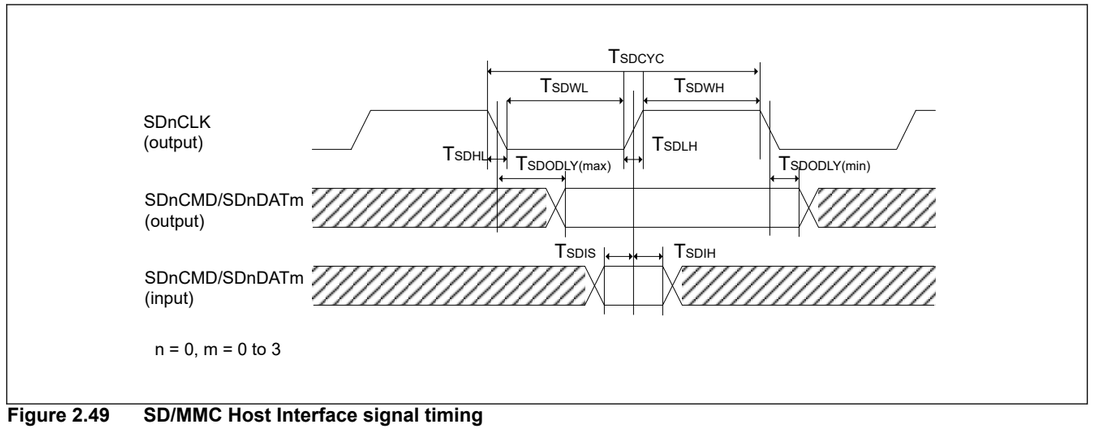

Figure 2.49 SD/MMC Host Interface signal timing

2.4 USB Characteristics

2.4.1 USBFS Timing

Table 2.33 USBFS low-speed characteristics for host only (USB_DP and USB_DM pin characteristics)

Conditions: VCC = AVCC0 = VCC_USB = VBATT = 3.0 to 3.6V, 2.7 ≤ VREFH0/VREFH ≤ AVCC0, USBCLK = 48 MHz

Parameter		Symbol	Min	Typ	Max	Unit	Test conditions
Input characteristics	Input high voltage	V_{IH}	2.0	—	—	V	—
	Input low voltage	V_{IL}	—	—	0.8	V	—
	Differential input sensitivity	V_{DI}	0.2	—	—	V	| USB_DP - USB_DM |
	Differential common-mode range	V_{CM}	0.8	—	2.5	V	—
Output characteristics	Output high voltage	V_{OH}	2.8	—	3.6	V	I_{OH} = –200 μA
	Output low voltage	V_{OL}	0.0	—	0.3	V	I_{OL} = 2 mA
	Cross-over voltage	V_{CRS}	1.3	—	2.0	V	Figure 2.50
	Rise time	t_{LR}	75	—	300	ns	
	Fall time	t_{LF}	75	—	300	ns	
	Rise/fall time ratio	t_{LR} / t_{LF}	80	—	125	%	t_{LR}/ t_{LF}
Pull-up and pull-down characteristics	USB_DP and USB_DM pull-down resistance in host controller mode	R_{pd}	14.25	—	24.80	kΩ	—

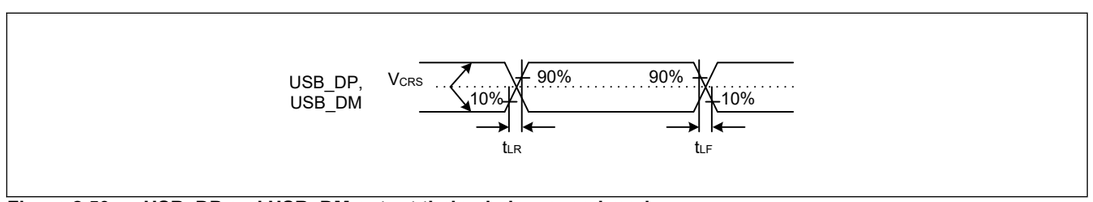

Figure 2.50 USB_DP and USB_DM output timing in low-speed mode

Note: 必须使用名称后附有字母的引脚，例如"_A"、"_B"，以表示组成员身份。对于SDMMC主机接口，对每组电气特性的交流部分进行测量。

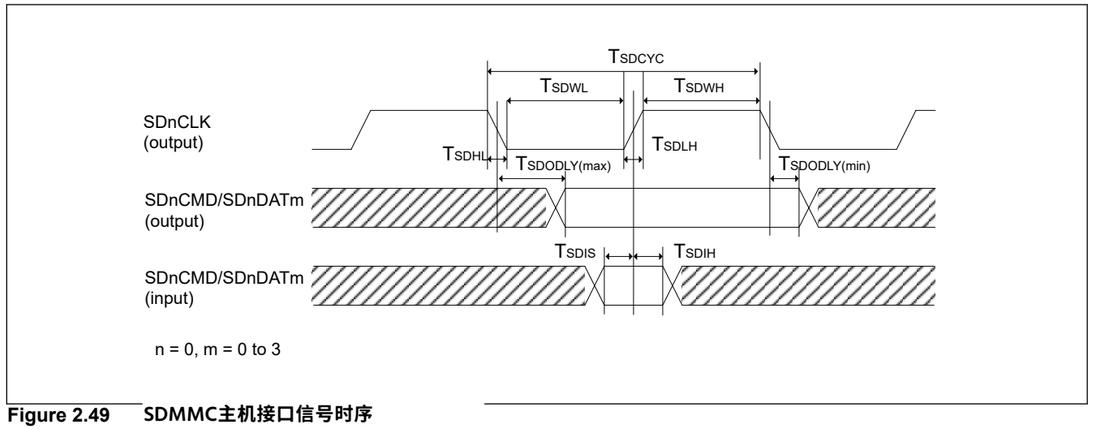

Figure 2.49 SDMMC主机接口信号时序

2.4 USB特性

2.4.1 USBFS Timing

Table 2.33 仅主机的USBFS低速特性（USB_DP和USB_DM引脚特性）

Conditions: VCC = AVCC0 = VCC_USB = VBATT = 3.0 to 3.6V, 2.7 ≤ VREFH0/VREFH ≤ AVCC0, USBCLK = 48 MHz

Parameter		Symbol	Min	Typ	Max	Unit	测试条件
输入特性	输入高压	V_{IH}	2.0	—	—	V	—
	输入低电压	V_{IL}	—	—	0.8	V	—
	差分输入灵敏度	V_{DI}	0.2	—	—	V	| USB_DP - USB_DM |
	差分共模范围	V_{CM}	0.8	—	2.5	V	—
输出特性	输出高压	V_{OH}	2.8	—	3.6	V	I_{OH} = –200 μA
	输出低电压	V_{OL}	0.0	—	0.3	V	我OL=2毫安
	Cross-over voltage	V_{CRS}	1.3	—	2.0	V	Figure 2.50
	上升时间	t_{LR}	75	—	300	ns	
	秋季时间	t_{LF}	75	—	300	ns	
	上升下降时间比	t_{LR} / t_{LF}	80	—	125	%	t_{LR}/ t_{LF}
上拉和下拉特性	主机控制器模式下的USB_DP和US B_DM下拉电阻	R_{pd}	14.25	—	24.80	kΩ	—

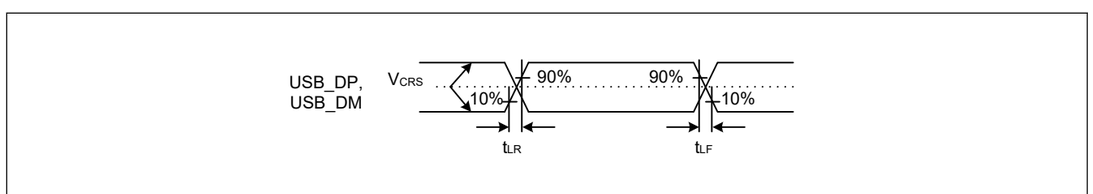

Figure 2.50 低速模式下的USB_DP和USB_DM输出时序

RA生态工作室

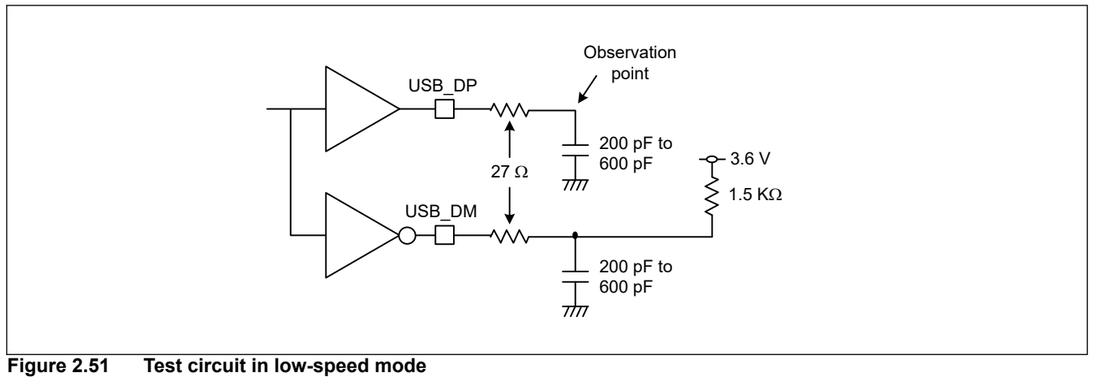

Figure 2.51 Test circuit in low-speed mode

Table 2.34 USBFS full-speed characteristics (USB_DP and USB_DM pin characteristics)

Conditions: VCC = AVCC0 = VCC_USB = VBATT = 3.0 to 3.6 V, 2.7 ≤ VREFH0/VREFH ≤ AVCC0, USBCLK = 48 MHz

Parameter		Symbol	Min	Typ	Max	Unit	Test conditions
Input characteristics	Input high voltage	V_{IH}	2.0	—	—	V	—
	Input low voltage	V_{IL}	—	—	0.8	V	—
	Differential input sensitivity	V_{DI}	0.2	—	—	V	| USB_DP - USB_DM |
	Differential common-mode range	V_{CM}	0.8	—	2.5	V	—
Output characteristics	Output high voltage	V_{OH}	2.8	—	3.6	V	I_{OH} = –200 μA
	Output low voltage	V_{OL}	0.0	—	0.3	V	I_{OL} = 2 mA
	Cross-over voltage	V_{CRS}	1.3	—	2.0	V	Figure 2.52
	Rise time	t_{LR}	4	—	20	ns	
	Fall time	t_{LF}	4	—	20	ns	
	Rise/fall time ratio	t_{LR} / t_{LF}	90	—	111.11	%	t_{FR}/ t_{FF}
	Output resistance	Z_{DRV}	28	—	44	Ω	USBFS: Rs = 27 Ω included
Pull-up and pull-down characteristics	DM pull-up resistance in device controller mode	R_{pu}	0.900	—	1.575	kΩ	During idle state
			1.425	—	3.090	kΩ	During transmission and reception
	USB_DP and USB_DM pull-down resistance in host controller mode	R_{pd}	14.25	—	24.80	kΩ	—

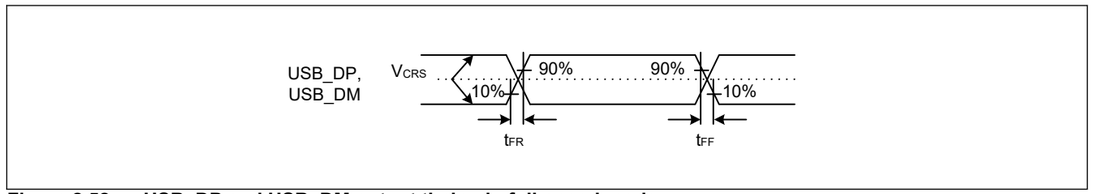

Figure 2.52 USB_DP and USB_DM output timing in full-speed mode

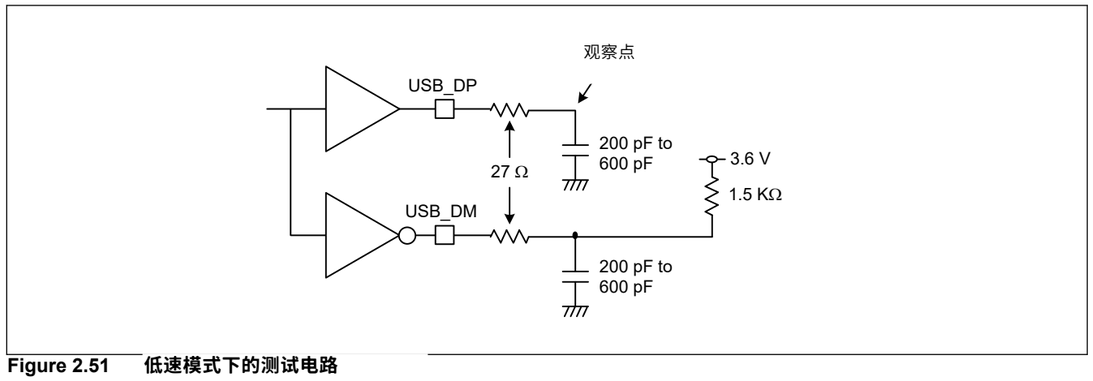

Figure 2.51 低速模式下的测试电路

Table 2.34 USBFS全速特性（USB_DP和USB_DM引脚特性）

Conditions: VCC = AVCC0 = VCC_USB = VBATT = 3.0 to 3.6 V, 2.7 ≤ VREFH0/VREFH ≤ AVCC0, USBCLK = 48 MHz

Parameter		Symbol	Min	Typ	Max	Unit	测试条件
输入特性	输入高压	V_{IH}	2.0	—	—	V	—
	输入低电压	V_{IL}	—	—	0.8	V	—
	差分输入灵敏度	V_{DI}	0.2	—	—	V	| USB_DP - USB_DM |
	差分共模范围	V_{CM}	0.8	—	2.5	V	—
输出特性	输出高压	V_{OH}	2.8	—	3.6	V	I_{OH} = –200 μA
	输出低电压	V_{OL}	0.0	—	0.3	V	我OL=2毫安
	Cross-over voltage	V_{CRS}	1.3	—	2.0	V	Figure 2.52
	上升时间	t_{LR}	4	—	20	ns	
	秋季时间	t_{LF}	4	—	20	ns	
	上升下降时间比	t_{LR} / t_{LF}	90	—	111.11	%	t_{FR}/ t_{FF}
	输出电阻	Z_{DRV}	28	—	44	Ω	USBFS: Rs = 27 Ω included
上拉和下拉特性	设备控制器模式下的DM上拉电阻	R_{pu}	0.900	—	1.575	kΩ	空闲状态期间
			1.425	—	3.090	kΩ	在发送和接收期间
	主机控制器模式下的USB_DP和US B_DM下拉电阻	R_{pd}	14.25	—	24.80	kΩ	—

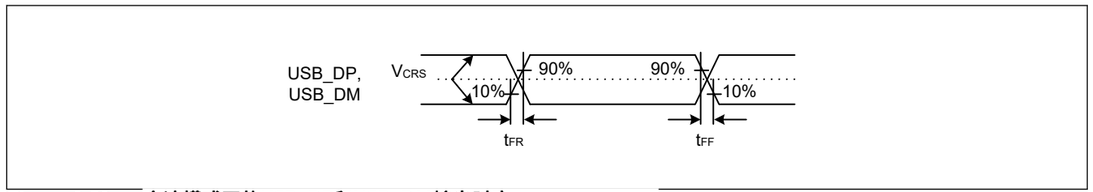

Figure 2.52 全速模式下的USB_DP和USB_DM输出时序

RA生态工作室

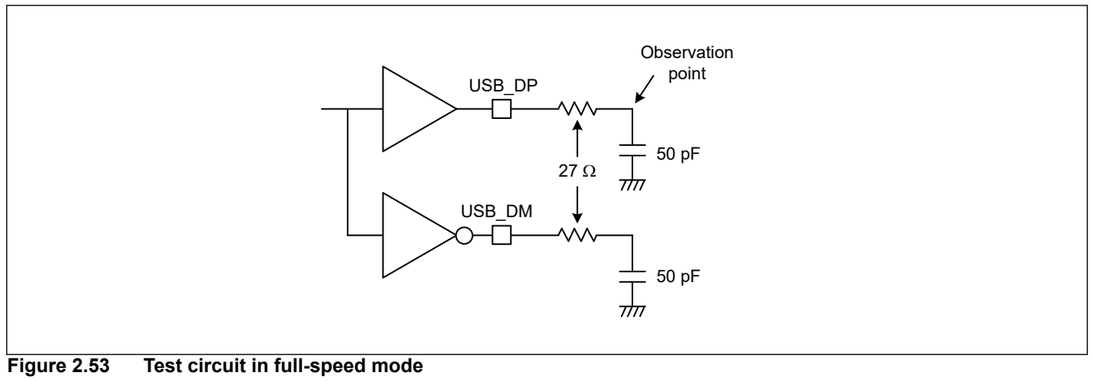

Figure 2.53 Test circuit in full-speed mode

Table 2.35 USBFS characteristics (USB_DP and USB_DM pin characteristics)

Conditions: VCC = AVCC0 = VCC_USB = VBATT = 3.0 to 3.6 V, 2.7 ≤ VREFH0/VREFH ≤ AVCC0, USBCLK = 48 MHz

Parameter		Symbol	Min	Typ	Max	Unit	Test conditions
Battery Charging Specification	D+ sink current	I_{DP_SINK}	25	—	175	μA	—
	D- sink current	I_{DM_SINK}	25	—	175	μA	—
	DCD source current	I_{DP_SRC}	7	—	13	μA	—
	Data detection voltage	V_{DAT_REF}	0.25	—	0.4	V	—
	D+ source voltage	V_{DP_SRC}	0.5	—	0.7	V	Outout current = 250 μA
	D- source voltage	V_{DM_SRC}	0.5	—	0.7	V	Outout current = 250 μA

2.5 ADC12 Characteristics

Table 2.36 A/D conversion characteristics for unit 0 (1 of 2)

Conditions: PCLKC = 1 to 50 MHz

Parameter			Min	Typ	Max	Unit	Test conditions
Frequency			1	—	50	MHz	—
Analog input capacitance			—	—	30	pF	—
Quantization error			—	±0.5	—	LSB	—
Resolution			—	—	12	Bits	—
High-precision high-speed channels (AN000 to AN002)	Conversion time*1 (operation at PCLKC = 50 MHz)	Permissible signal source impedance Max. = 1 kΩ	0.52 (0.26)*2	—	—	μs	Sampling in 13 states
		Max. = 400 Ω	0.40 (0.14)*2	—	—	μs	Sampling in 7 states VCC = AVCC0 = 3.0 to 3.6 V 3.0 V ≤ VREFH0 ≤ AVCC0
	Offset error		—	±1.0	±2.5	LSB	—
	Full-scale error		—	±1.0	±2.5	LSB	—
	Absolute accuracy		—	±2.0	±4.5	LSB	—
	DNL differential nonlinearity error		—	±0.5	±1.5	LSB	—
	INL integral nonlinearity error		—	±1.0	±2.5	LSB	—

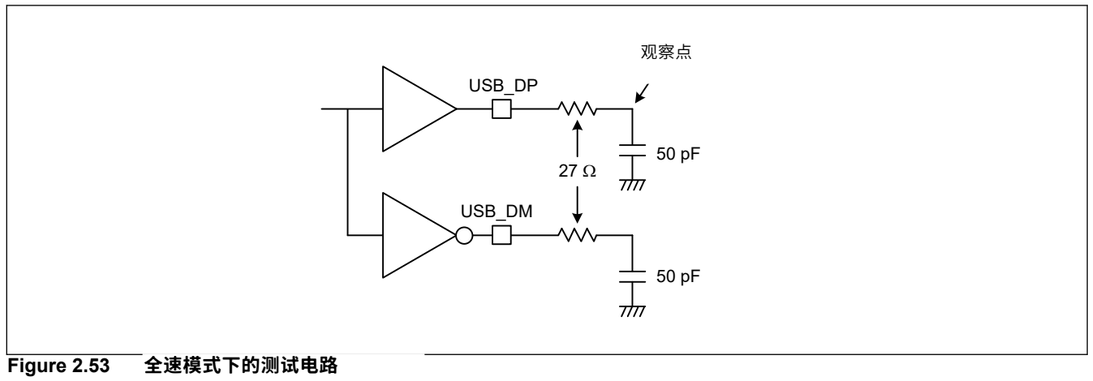

Figure 2.53 全速模式下的测试电路

Table 2.35 USBFS特性（USB_DP和USB_DM引脚特性）

Conditions: VCC = AVCC0 = VCC_USB = VBATT = 3.0 to 3.6 V, 2.7 ≤ VREFH0/VREFH ≤ AVCC0, USBCLK = 48 MHz

Parameter		Symbol	Min	Typ	Max	Unit	测试条件
电池充电 Specification	D+灌电流	I_{DP_SINK}	25	—	175	μA	—
	D- sink current	I_{DM_SINK}	25	—	175	μA	—
	DCD源电流	I_{DP_SRC}	7	—	13	μA	—
	数据检测电压	V_{DAT_REF}	0.25	—	0.4	V	—
	D+源电压	V_{DP_SRC}	0.5	—	0.7	V	Outout current = 250 μA
	D- source voltage	V_{DM_SRC}	0.5	—	0.7	V	Outout current = 250 μA

2.5 ADC12 Characteristics

Table 2.36 单元0(1of2)的AD转换特性

Conditions: PCLKC = 1 to 50 MHz

Parameter			Min	Typ	最大单位		测试条件
Frequency			1	—	50	MHz	—
模拟输入电容			—	—	30	pF	—
量化误差			—	±0.5	—	LSB	—
Resolution			—	—	12	Bits	—
高精度高速通道（AN000至AN002）	转换时间*1 (operation at PCLKC = 50 MHz)	允许的信号源阻抗 Max.=1kΩ	0.52 (0.26)*2	—	—	μs	在13个州进行抽样
		Max. = 400 Ω	0.40 (0.14)*2	—	—	μs	在7种状态下采样 VCC=AVCC0=3.0至3.6V3.0V≤VREFH0≤AVCC0
	偏移误差		—	±1.0	±2.5	LSB	—
	Full-scale error		—	±1.0	±2.5	LSB	—
	绝对精度		—	±2.0	±4.5	LSB	—
	DNL微分非线性误差		—	±0.5	±1.5	LSB	—
	INL积分非线性误差		—	±1.0	±2.5	LSB	—

RA生态工作室

Table 2.36 A/D conversion characteristics for unit 0 (2 of 2)

Conditions: PCLKC = 1 to 50 MHz

Parameter			Min	Typ	Max	Unit	Test conditions
High-precision normal-speed channels (AN003 to AN008, AN011 to AN013)	Conversion time*1 (Operation at PCLKC = 50 MHz)	Permissible signal source impedance Max. = 1 kΩ	0.92 (0.66)*2	—	—	μs	Sampling in 33 states
	Offset error		—	±1.0	±2.5	LSB	—
	Full-scale error		—	±1.0	±2.5	LSB	—
	Absolute accuracy		—	±2.0	±4.5	LSB	—
	DNL differential nonlinearity error		—	±0.5	±1.5	LSB	—
	INL integral nonlinearity error		—	±1.0	±2.5	LSB	—
Normal-precision normal-speed channels (AN016)	Conversion time*1 (Operation at PCLKC = 50 MHz)	Permissible signal source impedance Max. = 1 kΩ	0.92 (0.66)*2	—	—	μs	Sampling in 33 states
	Offset error		—	±1.0	±5.5	LSB	—
	Full-scale error		—	±1.0	±5.5	LSB	—
	Absolute accuracy		—	±2.0	±7.5	LSB	—
	DNL differential nonlinearity error		—	±0.5	±4.5	LSB	—
	INL integral nonlinearity error		—	±1.0	±5.5	LSB	—

Note: These specification values apply when there is no access to the external memory during A/D conversion. If access occurs during A/D conversion, values might not fall within the indicated ranges.
The use of PORT0 as digital outputs is not allowed when the 12-Bit A/D converter is used.
The characteristics apply when AVCC0, AVSS0, VREFH0, VREFL0, and 12-bit A/D converter input voltage are stable.

Note 1. The conversion time includes the sampling and comparison times. The number of sampling states is indicated for the test conditions.

Note 2. Values in parentheses indicate the sampling time.

Table 2.37 A/D internal reference voltage characteristics

Parameter	Min	Typ	Max	Unit	Test conditions
A/D internal reference voltage	1.13	1.18	1.23	V	—
Sampling time	4.15	—	—	μs	—

Table 2.36 单元0(2of2)的AD转换特性

Conditions: PCLKC = 1 to 50 MHz

Parameter			Min	Typ	最大	单位	测试条件
高精度常速通道（AN003至AN008、AN011至AN013）	转换时间*1 (Operation at PCLKC = 50 MHz)	允许的信号源阻抗 Max.=1kΩ	0.92 (0.66)*2	—	—	μs	在33个州进行抽样
	偏移误差		—	±1.0	±2.5	LSB	—
	Full-scale error		—	±1.0	±2.5	LSB	—
	绝对精度		—	±2.0	±4.5	LSB	—
	DNL微分非线性误差		—	±0.5	±1.5	LSB	—
	INL积分非线性误差		—	±1.0	±2.5	LSB	—
Normal-precision normal-speed channels (AN016)	转换时间*1 (Operation at PCLKC = 50 MHz)	允许的信号源阻抗 Max.=1kΩ	0.92 (0.66)*2	—	—	μs	在33个州进行抽样
	偏移误差		—	±1.0	±5.5	LSB	—
	Full-scale error		—	±1.0	±5.5	LSB	—
	绝对精度		—	±2.0	±7.5	LSB	—
	DNL微分非线性误差		—	±0.5	±4.5	LSB	—
	INL积分非线性误差		—	±1.0	±5.5	LSB	—

Note: 这些规格值适用于在AD转换期间无法访问外部存储器的情况。如果访问发生在D转换，值可能不在指定范围内。
使用12位AD转换器时，不允许将PORT0用作数字输出。
该特性适用于AVCC0、AVSS0、VREFH0、VREFL0和12位AD转换器输入电压稳定时。

注1.转换时间包括采样时间和比较时间。针对测试条件指示采样状态的数量。

注2：括号内的数值表示采样时间。

Table 2.37 AD内部参考电压特性

Parameter	Min	Typ	Max	Unit	测试条件
AD内部参考电压	1.13	1.18	1.23	V	—
采样时间	4.15	—	—	μs	—

RA生态工作室

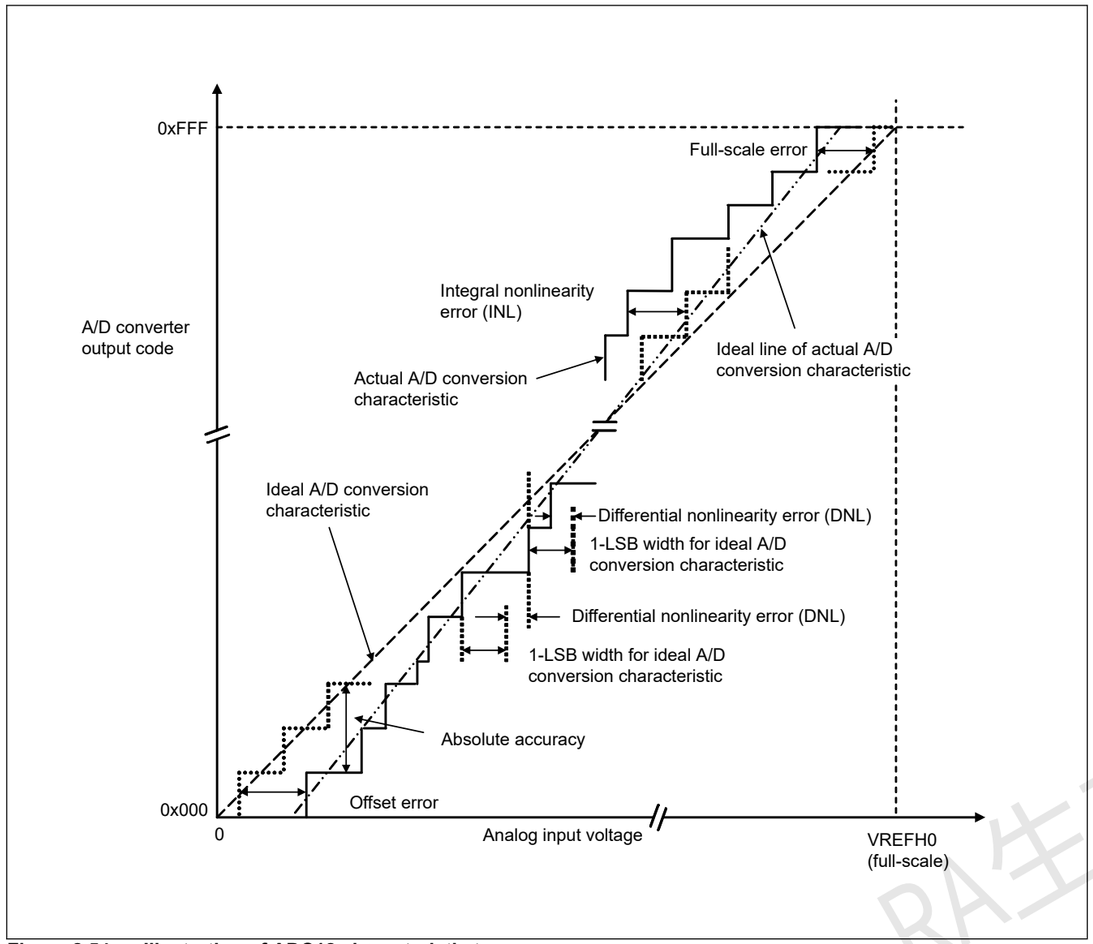

Figure 2.54 Illustration of ADC12 characteristic terms

Absolute accuracy

Absolute accuracy is the difference between output code based on the theoretical A/D conversion characteristics, and the actual A/D conversion result. When measuring absolute accuracy, the voltage at the midpoint of the width of the analog input voltage (1-LSB width), which can meet the expectation of outputting an equal code based on the theoretical A/D conversion characteristics, is used as an analog input voltage. For example, if 12-bit resolution is used and the reference voltage VREFH0 = 3.072 V, then the 1-LSB width becomes 0.75 mV, and 0 mV, 0.75 mV, and 1.5 mV are used as the analog input voltages. If the analog input voltage is 6 mV, an absolute accuracy of ±5 LSB means that the actual A/D conversion result is in the range of 0x003 to 0x00D, though an output code of 0x008 can be expected from the theoretical A/D conversion characteristics.

Integral nonlinearity error (INL)

Integral nonlinearity error is the maximum deviation between the ideal line when the measured offset and full-scale errors are zeroed, and the actual output code.

Differential nonlinearity error (DNL)

Differential nonlinearity error is the difference between the 1-LSB width based on the ideal A/D conversion characteristics and the width of the actual output code.

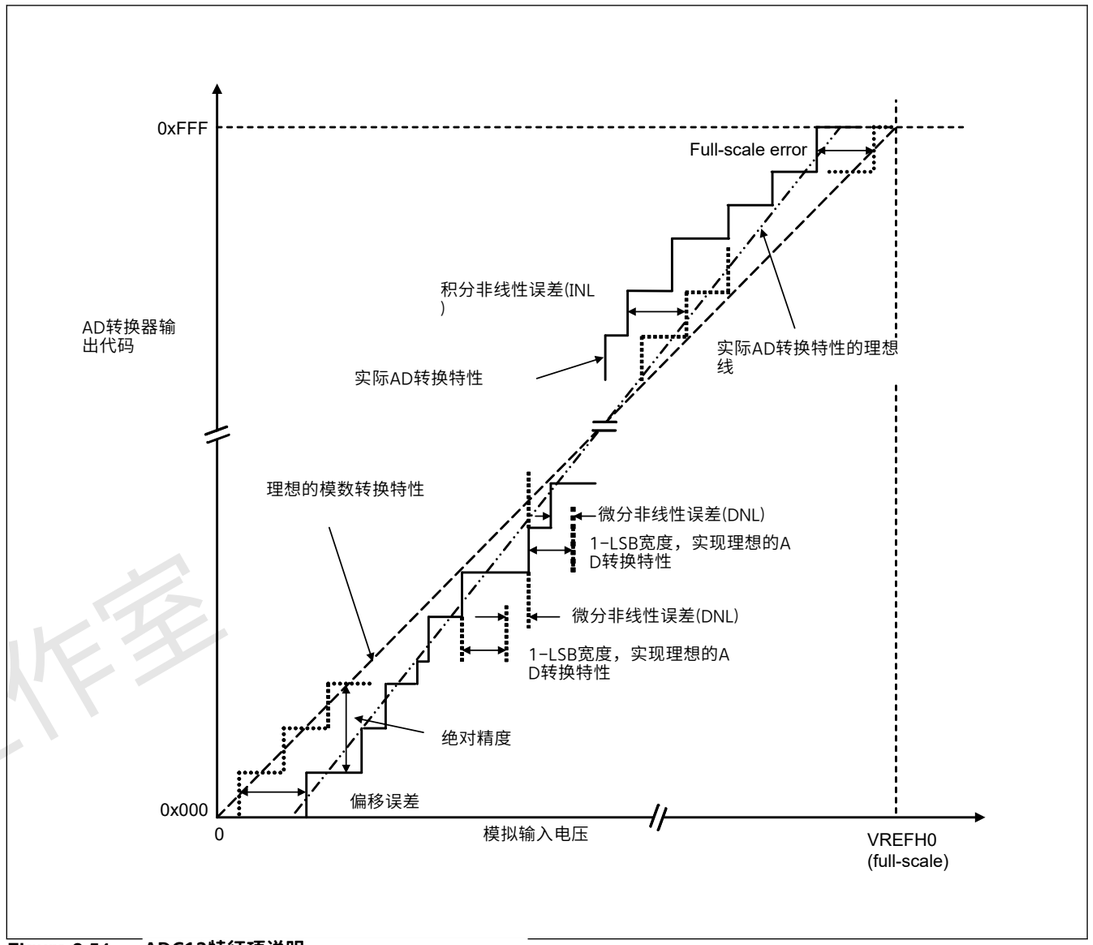

Figure 2.54 ADC12特征项说明

绝对精度

绝对精度是基于理论AD转换特性的输出代码与实际AD转换结果之间的差异。测量绝对精度时，将模拟输入电压宽度（1-LSB宽度）的中点电压作为模拟输入电压，该电压可以满足基于理论模数转换特性输出等码的预期.例如，如果使用12位分辨率且参考电压VREFH0=3.072V，则1-LSB宽度变为0.75mV，并且使用0mV、0.75mV和1.5mV作为模拟输入电压。如果模拟输入电压为6mV，±5LSB的绝对精度意味着实际的AD转换结果在0x003到0x00D的范围内，尽管从理论上的AD转换特性可以预期输出代码为0x008。

积分非线性误差(INL)

积分非线性误差是测量的偏移和满量程误差为零时的理想线与实际输出代码之间的最大偏差。

微分非线性误差(DNL)

微分非线性误差是基于理想AD转换特性的1-LSB宽度与实际输出码的宽度之差。

RA生态工作室

Offset error

Offset error is the difference between the transition point of the ideal first output code and the actual first output code.

Full-scale error

Full-scale error is the difference between the transition point of the ideal last output code and the actual last output code.

2.6 DAC12 Characteristics

Table 2.38 D/A conversion characteristics

Parameter	Min	Typ	Max	Unit	Test conditions
Resolution	—	—	12	Bits	—
Without output amplifier					
Absolute accuracy	—	—	±24	LSB	Resistive load 2 MΩ
INL	—	±2.0	±8.0	LSB	Resistive load 2 MΩ
DNL	—	±1.0	±2.0	LSB	—
Output impedance	—	8.5	—	kΩ	—
Conversion time	—	—	3	μs	Resistive load 2 MΩ, Capacitive load 20 pF
Output voltage range	0	—	VREFH	V	—
With output amplifier					
INL	—	±2.0	±4.0	LSB	—
DNL	—	±1.0	±2.0	LSB	—
Conversion time	—	—	4.0	μs	—
Resistive load	5	—	—	kΩ	—
Capacitive load	—	—	50	pF	—
Output voltage range	0.2	—	VREFH – 0.2	V	—

2.7 TSN Characteristics

Table 2.39 TSN characteristics

Parameter	Symbol	Min	Typ	Max	Unit	Test conditions
Relative accuracy	—	—	± 1.0	—	°C	—
Temperature slope	—	—	4.0	—	mV/°C	—
Output voltage (at 25 °C)	—	—	1.24	—	V	—
Temperature sensor start time	t_{START}	—	—	30	μs	—
Sampling time	—	4.15	—	—	μs	—

2.8 OSC Stop Detect Characteristics

Table 2.40 Oscillation stop detection circuit characteristics

Parameter	Symbol	Min	Typ	Max	Unit	Test conditions
Detection time	t_{dr}	—	—	1	ms	Figure 2.55

偏移误差

偏移误差是理想的第一个输出代码的转换点与实际的第一个输出代码之间的差异。

Full-scale error

满量程误差是理想的最后输出代码的转换点与实际的最后输出代码之间的差异。

2.6 DAC12 Characteristics

Table 2.38 DA转换特性

Parameter	Min	Typ	Max	Unit	测试条件
Resolution	—	—	12	Bits	—
无输出放大器					
绝对精度	—	—	±24	LSB	阻性负载2MΩ
INL	—	±2.0	±8.0	LSB	阻性负载2MΩ
DNL	—	±1.0	±2.0	LSB	—
输出阻抗	—	8.5	—	kΩ	—
转换时间	—	—	3	μs	电阻负载2MΩ，电容负载20pF
输出电压范围	0	—	VREFH	V	—
带输出放大器					
INL	—	±2.0	±4.0	LSB	—
DNL	—	±1.0	±2.0	LSB	—
转换时间	—	—	4.0	μs	—
阻性负载	5	—	—	kΩ	—
Capacitive load	—	—	50	pF	—
输出电压范围	0.2	—	VREFH – 0.2	V	—

2.7 TSN Characteristics

Table 2.39 TSN characteristics

Parameter	Symbol	Min	Typ	Max	Unit	测试条件
相对精度	—	—	± 1.0	—	°C	—
温度斜率	—	—	4.0	—	mV/°C	—
输出电压（25°C时）	—	—	1.24	—	V	—
温度传感器启动时间	t_{START}	—	—	30	μs	—
采样时间	—	4.15	—	—	μs	—

2.8 OSC停止检测特性

Table 2.40 振荡停止检测电路特性

Parameter	Symbol	Min	Typ	Max	Unit	测试条件
检测时间	t_{dr}	—	—	1	ms	Figure 2.55

RA生态工作室

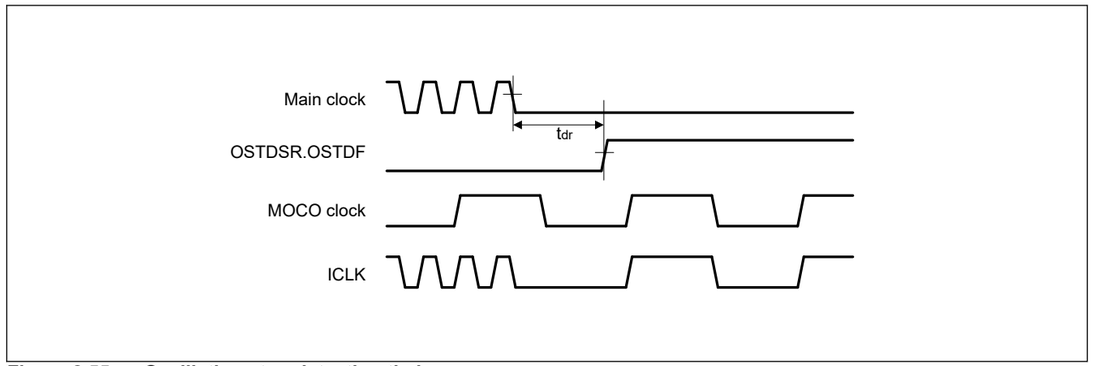

Figure 2.55 Oscillation stop detection timing

2.9 POR and LVD Characteristics

Table 2.41 Power-on reset circuit and voltage detection circuit characteristics (1)

Parameter			Symbol	Min	Typ	Max	Unit	Test conditions
Voltage detection level	Power-on reset (POR)	DPSBYCR.DEEPCUT[1:0] = 00b or 01b.	V_{POR}	2.5	2.6	2.7	V	Figure 2.56
		DPSBYCR.DEEPCUT[1:0] = 11b.		1.8	2.25	2.7		
	Voltage detection circuit (LVD0)		V_{det0_1}	2.84	2.94	3.04		Figure 2.57
			V_{det0_2}	2.77	2.87	2.97		
			V_{det0_3}	2.70	2.80	2.90		
	Voltage detection circuit (LVD1)		V_{det1_1}	2.89	2.99	3.09		Figure 2.58
			V_{det1_2}	2.82	2.92	3.02		
			V_{det1_3}	2.75	2.85	2.95		
	Voltage detection circuit (LVD2)		V_{det2_1}	2.89	2.99	3.09		Figure 2.59
			V_{det2_2}	2.82	2.92	3.02		
			V_{det2_3}	2.75	2.85	2.95		
Internal reset time	Power-on reset time		t_{POR}	—	4.5	—	ms	Figure 2.56
	LVD0 reset time		t_{LVD0}	—	0.51	—		Figure 2.57
	LVD1 reset time		t_{LVD1}	—	0.38	—		Figure 2.58
	LVD2 reset time		t_{LVD2}	—	0.38	—		Figure 2.59
Minimum VCC down time*1			t_{VOFF}	200	—	—	μs	Figure 2.56, Figure 2.57
Response delay			t_{det}	—	—	200	μs	Figure 2.57 to Figure 2.59
LVD operation stabilization time (after LVD is enabled)			$t_{d(E-A)}$	—	—	10	μs	Figure 2.58, Figure 2.59
Hysteresis width (LVD1 and LVD2)			V_{LVH}	—	70	—	mV	

Note 1. The minimum VCC down time indicates the time when VCC is below the minimum value of voltage detection levels V_{POR}, V_{det0}, V_{det1}, and V_{det2} for POR and LVD.

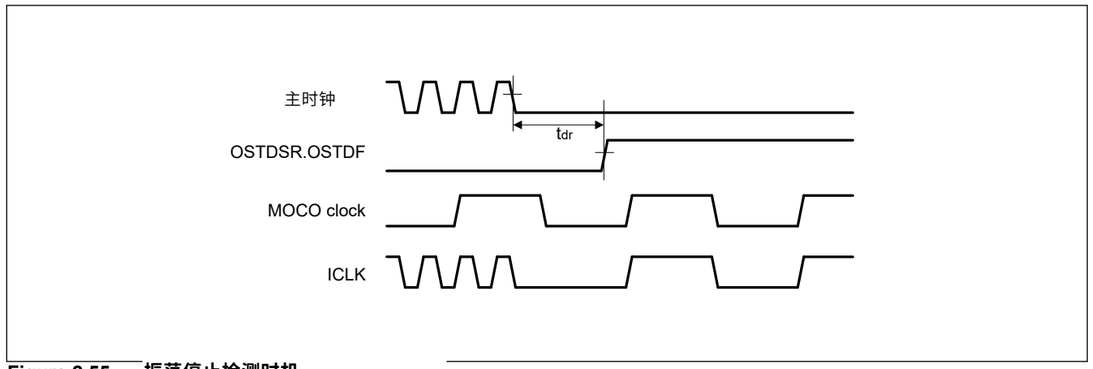

Figure 2.55 振荡停止检测时机

2.9 POR和LVD特性

Table 2.41 上电复位电路及电压检测电路特性（一）

Parameter			Symbol	Min	Typ	Max	单元	测试条件
电压检测电平	Power-on reset (POR)	DPSBYCR.DEEPCUT[1:0] = 00b or 01b.	V_{POR}	2.5	2.6	2.7	V	Figure 2.56
		DPSBYCR.DEEPCUT[1:0] = 11b.		1.8	2.25	2.7		
	电压检测电路（LVD0）		V_{det0_1}	2.84	2.94	3.04		Figure 2.57
			V_{det0_2}	2.77	2.87	2.97		
			V_{det0_3}	2.70	2.80	2.90		
	电压检测电路（LVD1）		V_{det1_1}	2.89	2.99	3.09		Figure 2.58
			V_{det1_2}	2.82	2.92	3.02		
			V_{det1_3}	2.75	2.85	2.95		
	电压检测电路（LVD2）		V_{det2_1}	2.89	2.99	3.09		Figure 2.59
			V_{det2_2}	2.82	2.92	3.02		
			V_{det2_3}	2.75	2.85	2.95		
内部复位时间	上电复位时间		t_{POR}	—	4.5	—	ms	Figure 2.56
	LVD0复位时间		t_{LVD0}	—	0.51	—		Figure 2.57
	LVD1复位时间		t_{LVD1}	—	0.38	—		Figure 2.58
	LVD2复位时间		t_{LVD2}	—	0.38	—		Figure 2.59
最小VCC停机时间*1			t_{VOFF}	200	—	—	μs	Figure 2.56, Figure 2.57
响应延迟			t_{det}	—	—	200	μs	图2.57至 Figure 2.59
LVD操作稳定时间（启用LVD后）			$t_{d(E-A)}$	—	—	10	μs	Figure 2.58, Figure 2.59
迟滞宽度（LVD1和LVD2）			V_{LVH}	—	70	—	mV	

注1.最小VCC停机时间是指VCC低于电压检测电平VPOR、Vdet0、Vdet1和Vdet2用于POR和LVD。

RA生态工作室

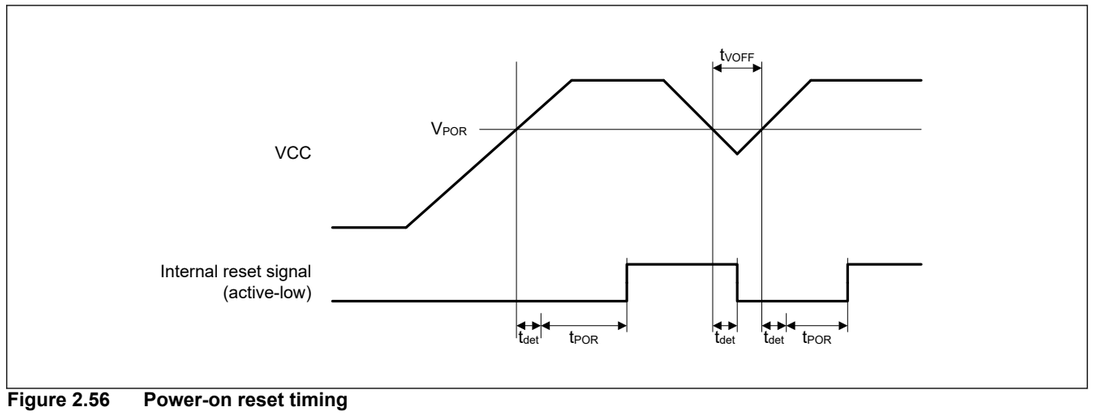

Figure 2.56 Power-on reset timing

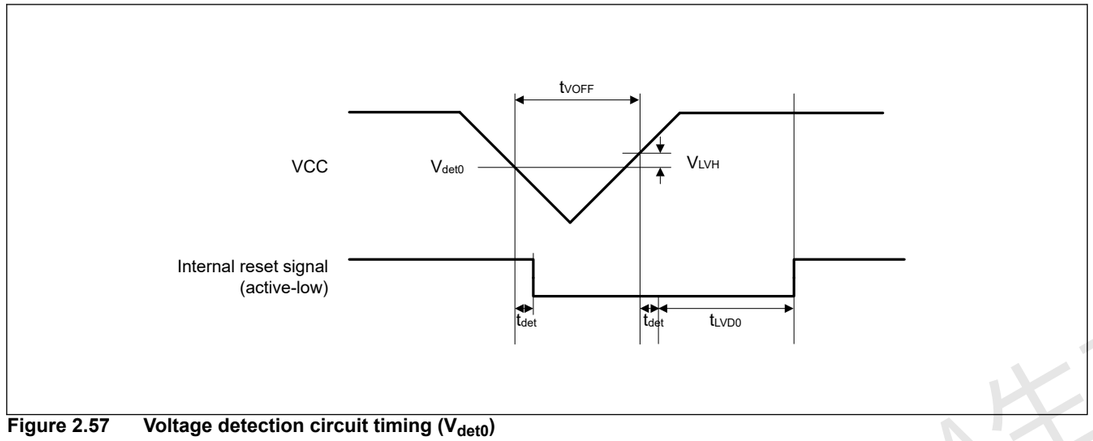

Figure 2.57 Voltage detection circuit timing (V_{det0})

RA生态工作室

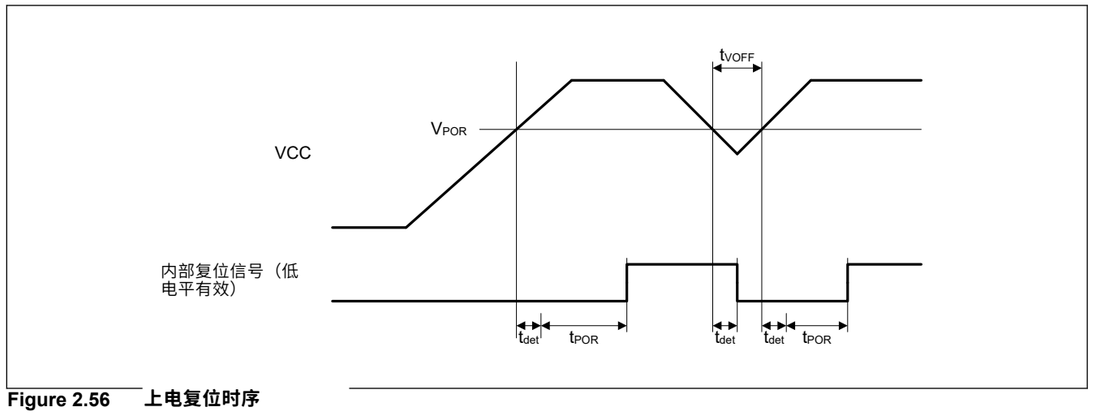

Figure 2.56 上电复位时序

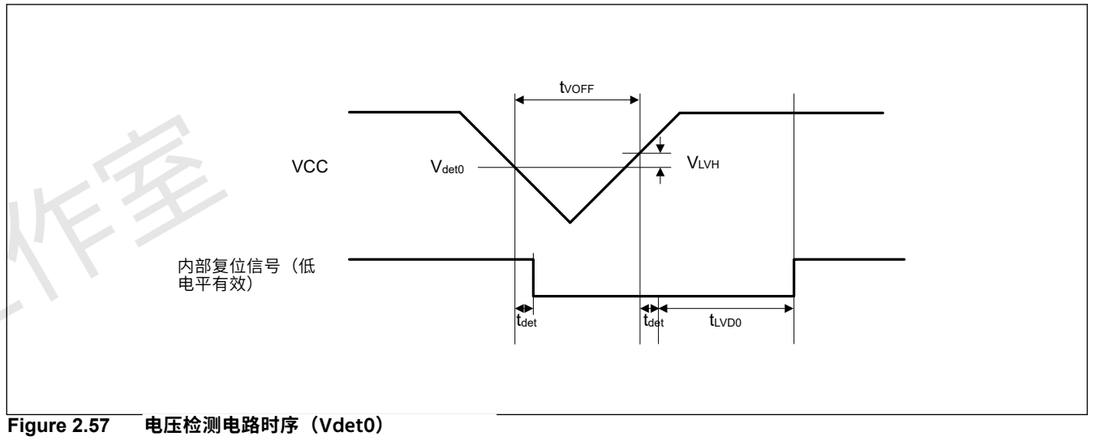

Figure 2.57 电压检测电路时序（Vdet0）

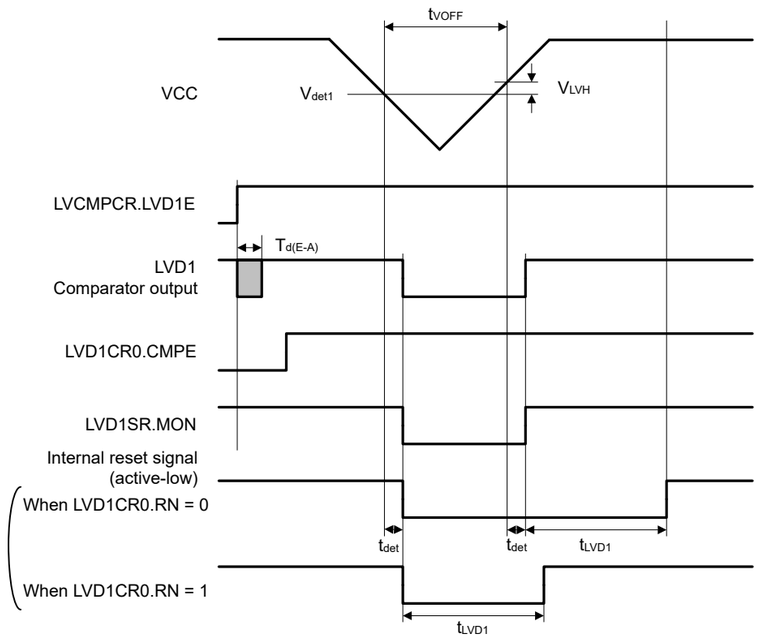

Figure 2.58 Voltage detection circuit timing (V_{det1})

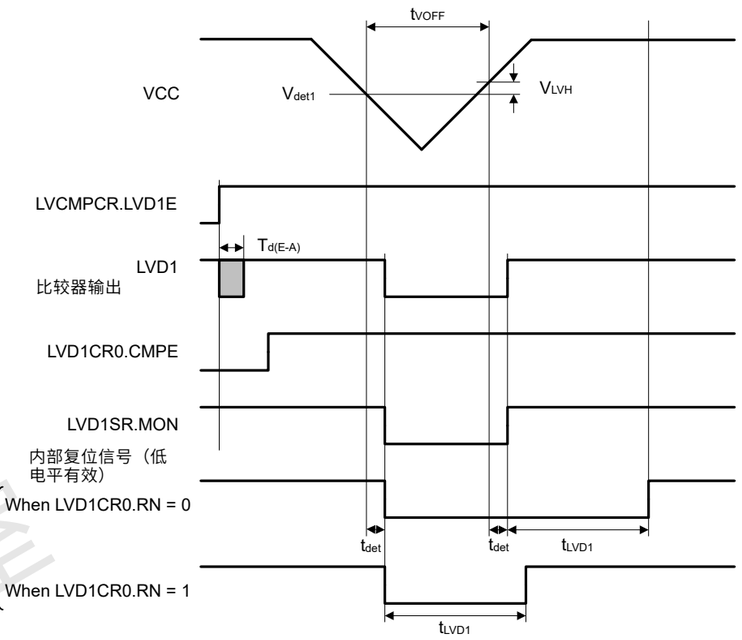

Figure 2.58 电压检测电路时序（Vdet1）

RA生态工作室

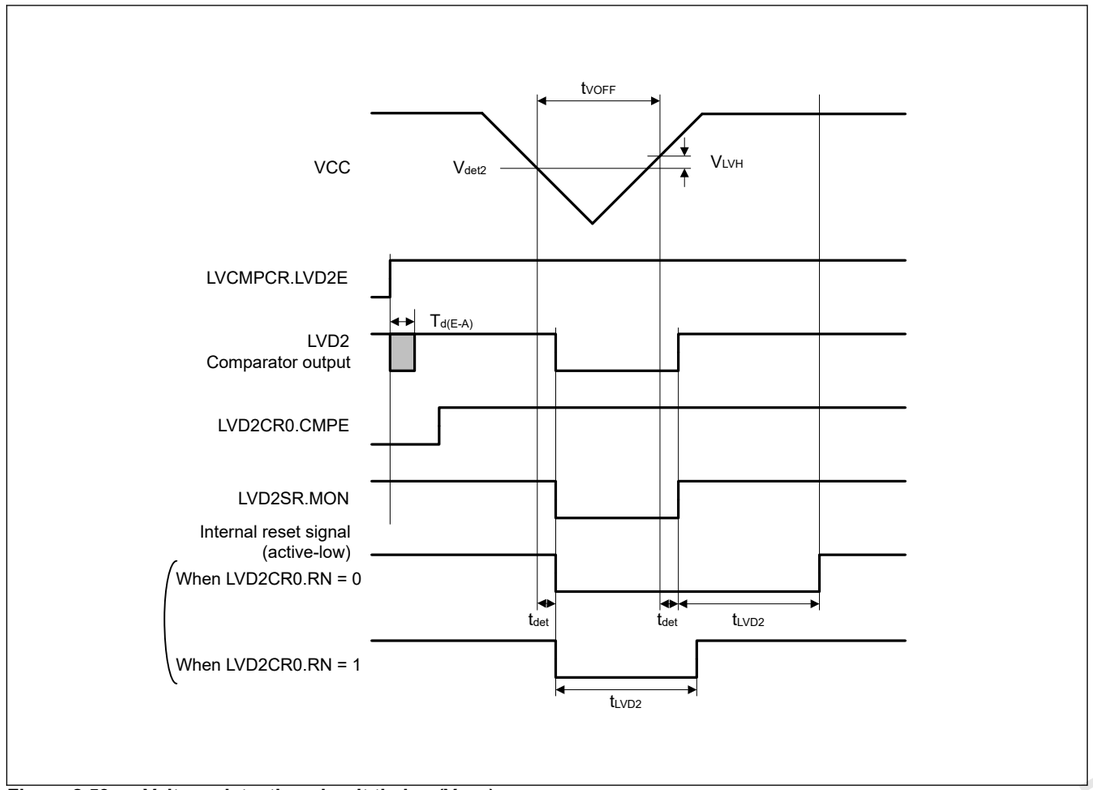

Figure 2.59 Voltage detection circuit timing (V_{det2})

2.10 VBATT Characteristics

Table 2.42 Battery backup function characteristics

Conditions: VCC = AVCC0 = VCC_USB = 2.7 to 3.6 V, 2.7 ≤ VREFH0/VREFH ≤ AVCC0, VBATT = 1.8 to 3.6 V

Parameter	Symbol	Min	Typ	Max	Unit	Test conditions
Voltage level for switching to battery backup	$V_{DETBATT}$	2.50	2.60	2.70	V	Figure 2.60
Lower-limit VBATT voltage for power supply switching caused by VCC voltage drop	V_{BATTSW}	2.70	—	—	V	
VCC-off period for starting power supply switching	$t_{VOFFBATT}$	200	—	—	μs	
VBATT low voltage detection level	$V_{battldet}$	1.8	1.9	2.0	V	Figure 2.61
Minimum VBATT down time	$t_{BATTOFF}$	200	—	—	μs	
Response delay	$t_{BATTdet}$	—	—	200	μs	
VBATT monitor operation stabilization time (after VBATTMNSELR.VBATTMNSEL is changed to 1)	$t_{d(E-A)}$	—	—	20	μs	
VBATT current increase (when VBATTMNSELR.VBATTMNSEL is 1 compared to the case that VBATTMNSELR.VBATTMNSEL is 0)	$I_{VBATTSEL}$	—	140	350	nA	

Note: The VCC-off period for starting power supply switching indicates the period in which VCC is below the minimum value of the voltage level for switching to battery backup ($V_{DETBATT}$).

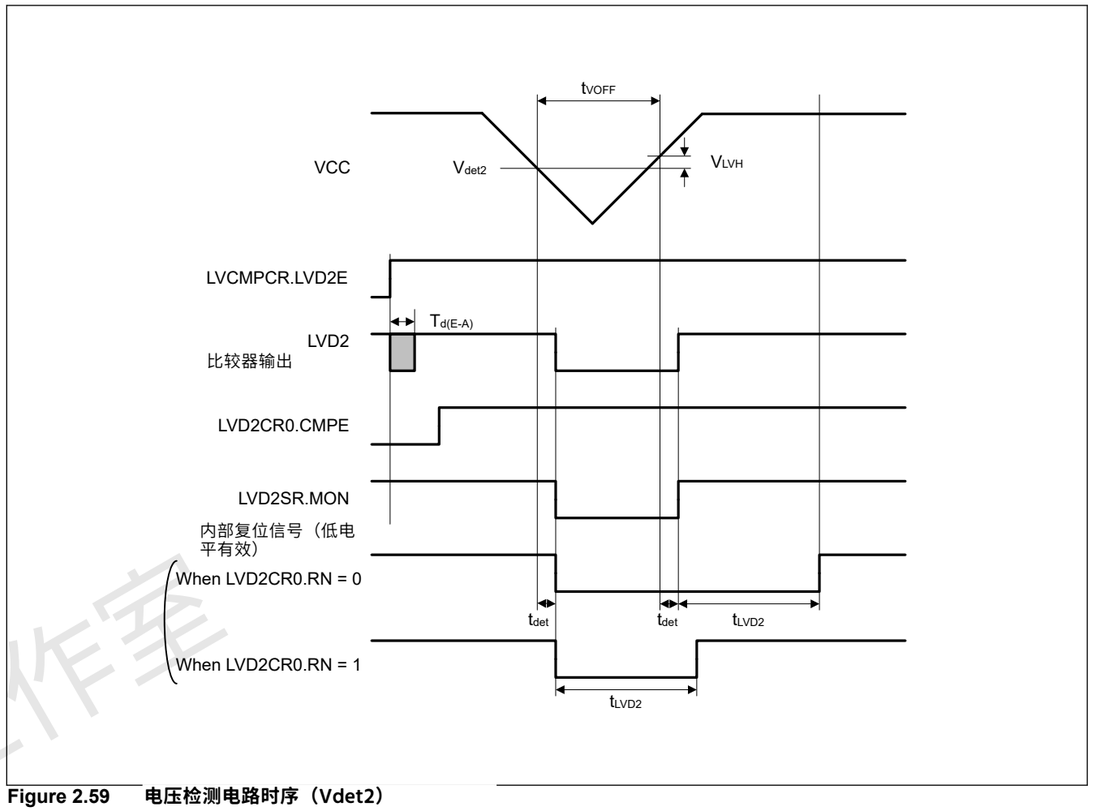

Figure 2.59 电压检测电路时序（Vdet2）

2.10 VBATT Characteristics

Table 2.42 电池备份功能特点

Conditions: VCC = AVCC0 = VCC_USB = 2.7 to 3.6 V, 2.7 ≤ VREFH0/VREFH ≤ AVCC0, VBATT = 1.8 to 3.6 V

Parameter	Symbol	Min	Typ	Max	Unit	测试条件
切换到备用电池的电压电平	$V_{DETBATT}$	2.50	2.60	2.70	V	Figure 2.60
VCC压降引起的电源切换下限VBATT电压	V_{BATTSW}	2.70	—	—	V	
启动电源切换的VCC-off周期	$t_{VOFFBATT}$	200	—	—	μs	
VBATT低电压检测电平	$V_{battldet}$	1.8	1.9	2.0	V	Figure 2.61
最短VBATT停机时间	$t_{BATTOFF}$	200	—	—	μs	
响应延迟	$t_{BATTdet}$	—	—	200	μs	
VBATT监视器运行稳定时间（VBATTMNSELR.VBATTMNSEL变为1后）	$t_{d(E-A)}$	—	—	20	μs	
VBATT电流增加（当与VBATTMNSELR.VBATTMNSEL为0的情况相比，VBATTMNSELR.VBATTMNSEL为1）	$I_{VBATTSEL}$	—	140	350	nA	

Note: 开始电源切换的VCC-off周期表示VCC低于切换到备用电池的电压电平最小值(VDETBATT)的周期。

RA生态工作室

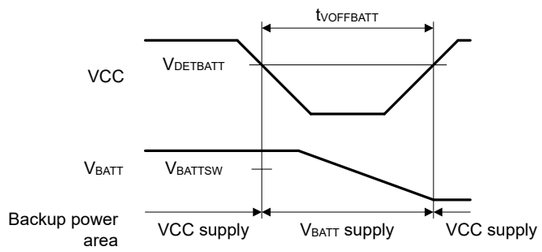

Figure 2.60 Battery backup function characteristics

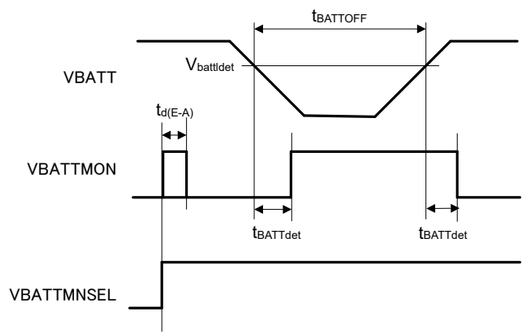

Figure 2.61 Battery backup function characteristics

2.11 CTSU Characteristics

Table 2.43 CTSU characteristics

Parameter	Symbol	Min	Typ	Max	Unit	Test conditions
External capacitance connected to TSCAP pin	C_{tscap}	9	10	11	nF	—
TS pin capacitive load	C_{base}	—	—	50	pF	—
Permissible output high current	ΣI_{oH}	—	—	-40	mA	When the mutual capacitance method is applied

2.12 Flash Memory Characteristics

2.12.1 Code Flash Memory Characteristics

Table 2.44 Code flash memory characteristics (1 of 2)

Conditions: Program or erase: FCLK = 4 to 50 MHz
Read: FCLK ≤ 50 MHz

Parameter		Symbol	FCLK = 4 MHz			20 MHz ≤ FCLK ≤ 50 MHz			Unit	Test conditions
			Min	Typ*6	Max	Min	Typ*6	Max		
Programming time N_{PEC} ≤ 100 times	128-byte	t_{P128}	—	0.75	13.2	—	0.34	6.0	ms	
	8-KB	t_{P8K}	—	49	176	—	22	80	ms	
	32-KB	t_{P32K}	—	194	704	—	88	320	ms	

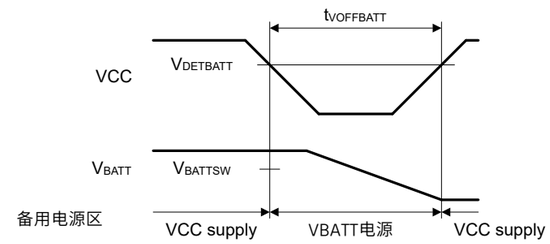

Figure 2.60 电池备份功能特点

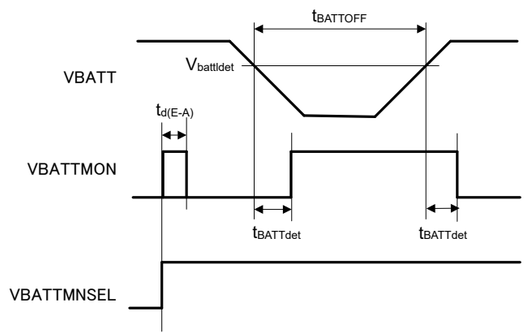

Figure 2.61 电池备份功能特点

2.11 CTSU Characteristics

Table 2.43 CTSU characteristics

Parameter	Symbol	Min	Typ	Max	Unit	测试条件
连接到TSCAP引脚的外部电容	C_{tscap}	9	10	11	nF	—
TS引脚容性负载	C_{base}	—	—	50	pF	—
允许输出大电流	ΣI_{oH}	—	—	-40	mA	应用互电容法时

2.12 闪存特性

2.12.1 代码闪存特性

Table 2.44 代码闪存特性(1of2)

条件：编程或擦除：FCLK=4至50MHz
Read: FCLK ≤ 50 MHz

Parameter		Symbol	FCLK = 4 MHz			20 MHz ≤ FCLK ≤ 50 MHz			Unit	测试条件
			Min	Typ*6	Max	Min	Typ*6	Max		
编程时间NPEC≤100次	128-byte	t_{P128}	—	0.75	13.2	—	0.34	6.0	ms	
	8-KB	t_{P8K}	—	49	176	—	22	80	ms	
	32-KB	t_{P32K}	—	194	704	—	88	320	ms	

RA生态工作室

Table 2.44 Code flash memory characteristics (2 of 2)

Conditions: Program or erase: FCLK = 4 to 50 MHz
Read: FCLK ≤ 50 MHz

Parameter		Symbol	FCLK = 4 MHz			20 MHz ≤ FCLK ≤ 50 MHz			Unit	Test conditions
			Min	Typ*6	Max	Min	Typ*6	Max		
Programming time N_{PEC} > 100 times	128-byte	t_{P128}	—	0.91	15.8	—	0.41	7.2	ms	
	8-KB	t_{P8K}	—	60	212	—	27	96	ms	
	32-KB	t_{P32K}	—	234	848	—	106	384	ms	
Erasure time N_{PEC} ≤ 100 times	8-KB	t_{E8K}	—	78	216	—	43	120	ms	
	32-KB	t_{E32K}	—	283	864	—	157	480	ms	
Erasure time N_{PEC} > 100 times	8-KB	t_{E8K}	—	94	260	—	52	144	ms	
	32-KB	t_{E32K}	—	341	1040	—	189	576	ms	
Reprogramming/erasure cycle*4		N_{PEC}	10000*1	—	—	10000*1	—	—	Times	
Suspend delay during programming		t_{SPD}	—	—	264	—	—	120	μs	
Programming resume time		t_{PRT}	—	—	110	—	—	50	μs	
First suspend delay during erasure in suspend priority mode		t_{SESD1}	—	—	216	—	—	120	μs	
Second suspend delay during erasure in suspend priority mode		t_{SESD2}	—	—	1.7	—	—	1.7	ms	
Suspend delay during erasure in erasure priority mode		t_{SEED}	—	—	1.7	—	—	1.7	ms	
First erasing resume time during erasure in suspend priority mode*5		t_{REST1}	—	—	1.7	—	—	1.7	ms	
Second erasing resume time during erasure in suspend priority mode		t_{REST2}	—	—	144	—	—	80	μs	
Erasing resume time during erasure in erasure priority mode		t_{REET}	—	—	144	—	—	80	μs	
Forced stop command		t_{FD}	—	—	32	—	—	20	μs	
Data hold time*2		t_{DRP}	10*2 *3	—	—	10*2 *3	—	—	Years	

Note 1. This is the minimum number of times to guarantee all the characteristics after reprogramming. The guaranteed range is from 1 to the minimum value.
Note 2. This indicates the minimum value of the characteristic when reprogramming is performed within the specified range.
Note 3. This result is obtained from reliability testing.
Note 4. The reprogram/erase cycle is the number of erasures for each block. When the reprogram/erase cycle is n times (n = 10,000), erasing can be performed n times for each block. For example, when 128-byte programming is performed 64 times for different addresses in 8-KB blocks, and then the entire block is erased, the reprogram/erase cycle is counted as one. However, programming the same address several times as one erasure is not enabled. Overwriting is prohibited.
Note 5. Time for resumption includes time for reapplying the erasing pulse (up to one full pulse) that was cut off at the time of suspension.
Note 6. The reference value at VCC = 3.3V and room temperature.

Table 2.44 代码闪存特性(2of2)

条件：编程或擦除：FCLK=4至50MHz
Read: FCLK ≤ 50 MHz

Parameter		Symbol	FCLK = 4 MHz			20 MHz ≤ FCLK ≤ 50 MHz			Unit	测试条件
			Min	Typ*6	Max	Min	Typ*6	Max		
编程时间NPEC>100次	128-byte	t_{P128}	—	0.91	15.8	—	0.41	7.2	ms	
	8-KB	t_{P8K}	—	60	212	—	27	96	ms	
	32-KB	t_{P32K}	—	234	848	—	106	384	ms	
擦除时间 NPEC≤100次	8-KB	t_{E8K}	—	78	216	—	43	120	ms	
	32-KB	t_{E32K}	—	283	864	—	157	480	ms	
擦除时间 NPEC>100次	8-KB	t_{E8K}	—	94	260	—	52	144	ms	
	32-KB	t_{E32K}	—	341	1040	—	189	576	ms	
Reprogramming/erasure cycle*4		N_{PEC}	10000*1	—	—	10000*1	—	—	Times	
编程期间暂停延迟		t_{SPD}	—	—	264	—	—	120	μs	
编程恢复时间		t_{PRT}	—	—	110	—	—	50	μs	
挂起优先模式下擦除期间的第一个挂起延迟		t_{SESD1}	—	—	216	—	—	120	μs	
挂起优先模式下擦除期间的第二挂起延迟		t_{SESD2}	—	—	1.7	—	—	1.7	ms	
擦除优先模式下擦除期间的挂起延迟		t_{SEED}	—	—	1.7	—	—	1.7	ms	
挂起优先模式擦除期间的第一次擦除恢复时间*5		t_{REST1}	—	—	1.7	—	—	1.7	ms	
挂起优先模式下擦除期间的第二次擦除恢复时间		t_{REST2}	—	—	144	—	—	80	μs	
在擦除优先模式下擦除期间擦除恢复时间		t_{REET}	—	—	144	—	—	80	μs	
强制停止命令		t_{FD}	—	—	32	—	—	20	μs	
数据保持时间*2		t_{DRP}	10*2 *3	—	—	10*2 *3	—	—	Years	

注1.这是重新编程后保证所有特性的最少次数。保证范围是从1到最小值。

注2.这表示在指定范围内执行重新编程时特性的最小值。
注3：此结果来自可靠性测试。
注4.重新编程擦除周期是每个块的擦除次数。当重新编程擦除周期为n次（n=10 000）时，可以对每个块执行n次擦除。例如，当对8KB块中的不同地址执行64次128字节编程，然后擦除整个块时，重新编程擦除周期计为1。但是，不能将同一地址多次编程为一次擦除。禁止覆盖。

注5.恢复时间包括重新应用暂停时切断的擦除脉冲（最多1个完整脉冲）的时间。
注6.VCC=3.3V和室温下的参考值。

RA生态工作室

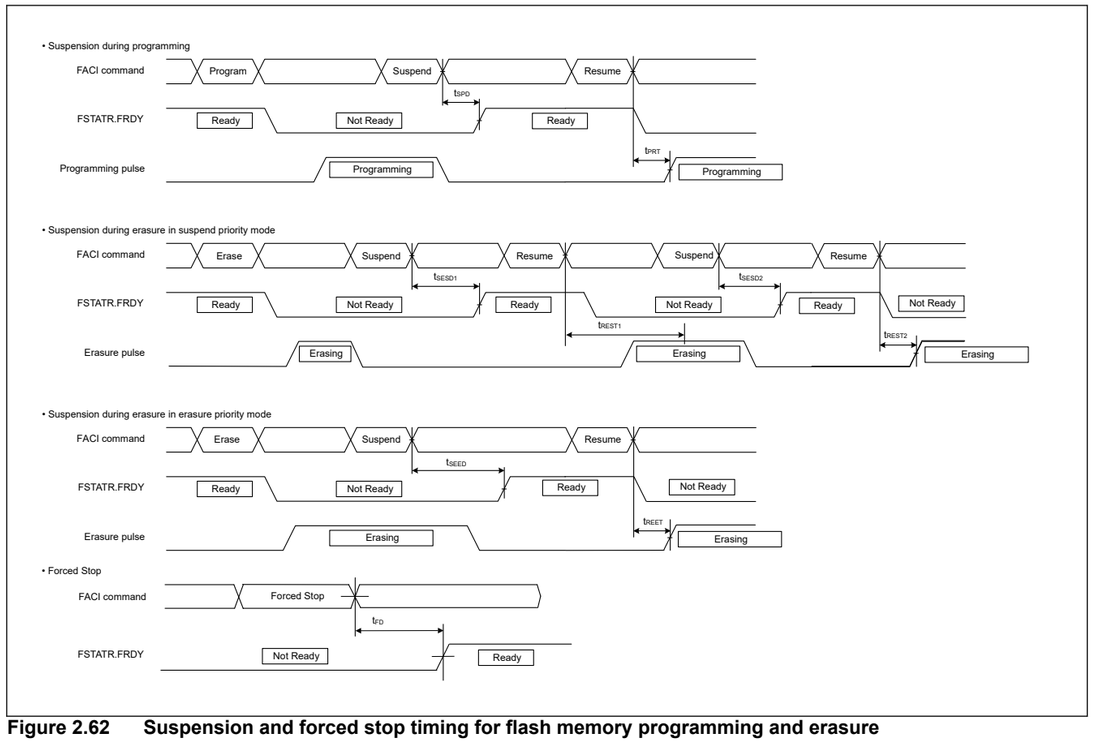

Figure 2.62 Suspension and forced stop timing for flash memory programming and erasure

2.12.2 Data Flash Memory Characteristics

Table 2.45 Data flash memory characteristics (1 of 2)

Conditions: Program or erase: FCLK = 4 to 50 MHz
Read: FCLK ≤ 50 MHz

Parameter		Symbol	FCLK = 4 MHz			20 MHz ≤ FCLK ≤ 50 MHz			Unit	Test conditions
			Min	Typ*6	Max	Min	Typ*6	Max		
Programming time	4-byte	t_{DP4}	—	0.36	3.8	—	0.16	1.7	ms	
	8-byte	t_{DP8}	—	0.38	4.0	—	0.17	1.8		
	16-byte	t_{DP16}	—	0.42	4.5	—	0.19	2.0		
Erasure time	64-byte	t_{DE64}	—	3.1	18	—	1.7	10	ms	
	128-byte	t_{DE128}	—	4.7	27	—	2.6	15		
	256-byte	t_{DE256}	—	8.9	50	—	4.9	28		
Blank check time	4-byte	t_{DBC4}	—	—	84	—	—	30	μs	
Reprogramming/erasure cycle*1		N_{DPEC}	125000*2	—	—	125000*2	—	—	—	
Suspend delay during programming	4-byte	t_{DSPD}	—	—	264	—	—	120	μs	
	8-byte		—	—	264	—	—	120		
	16-byte		—	—	264	—	—	120		
Programming resume time		t_{DPRT}	—	—	110	—	—	50	μs	
First suspend delay during erasure in suspend priority mode	64-byte	t_{DSESD1}	—	—	216	—	—	120	μs	
	128-byte		—	—	216	—	—	120		
	256-byte		—	—	216	—	—	120		

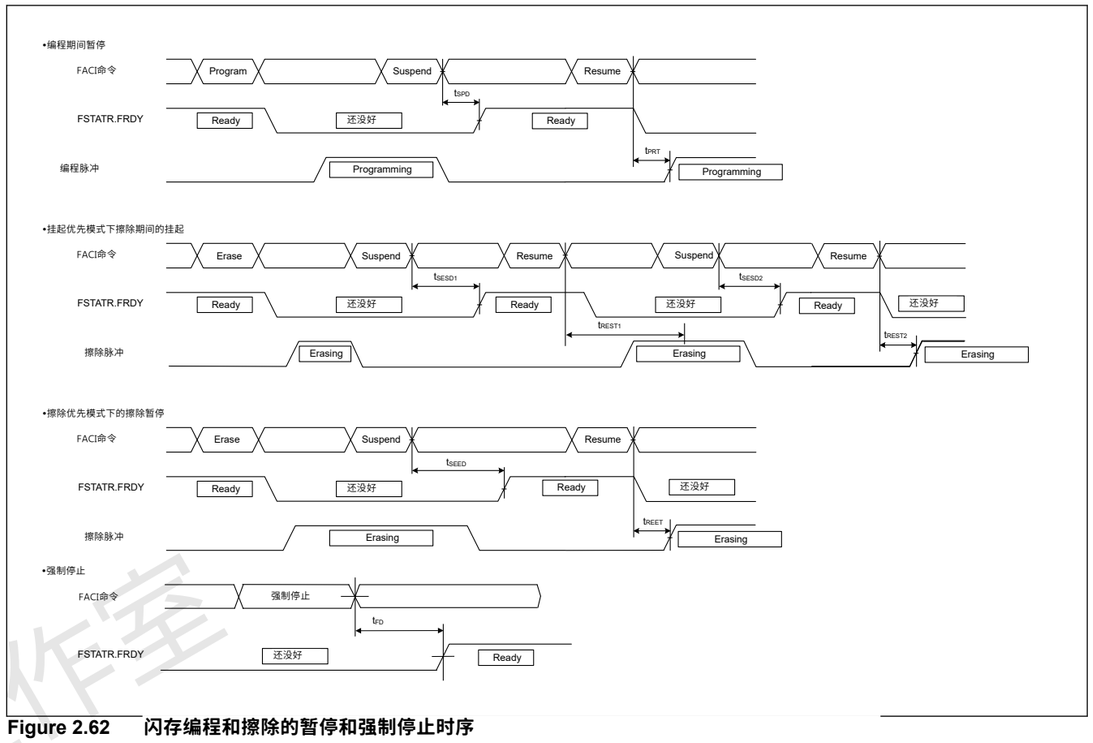

Figure 2.62 闪存编程和擦除的暂停和强制停止时序

2.12.2 数据闪存特性

Table 2.45 数据闪存特性(1of2)

条件：编程或擦除：FCLK=4至50MHz
Read: FCLK ≤ 50 MHz

Parameter		Symbol	FCLK = 4 MHz			20 MHz ≤ FCLK ≤ 50 MHz			Unit	测试条件
			Min	典型*6最大值最小值			Typ*6	Max		
编程时间	4-byte	t_{DP4}	—	0.36	3.8	—	0.16	1.7	ms	
	8-byte	t_{DP8}	—	0.38	4.0	—	0.17	1.8		
	16-byte	t_{DP16}	—	0.42	4.5	—	0.19	2.0		
擦除时间	64-byte	t_{DE64}	—	3.1	18	—	1.7	10	ms	
	128-byte	t_{DE128}	—	4.7	27	—	2.6	15		
	256-byte	t_{DE256}	—	8.9	50	—	4.9	28		
空白检查时间	4-byte	t_{DBC4}	—	—	84	—	—	30	μs	
Reprogramming/erasure cycle*1		N_{DPEC}	125000*2	—	—	125000*2	—	—	—	
编程期间暂停延迟	4-byte	t_{DSPD}	—	—	264	—	—	120	μs	
	8-byte		—	—	264	—	—	120		
	16-byte		—	—	264	—	—	120		
编程恢复时间		t_{DPRT}	—	—	110	—	—	50	μs	
挂起优先模式下擦除期间的第一个挂起延迟	64-byte	t_{DSESD1}	—	—	216	—	—	120	μs	
	128-byte		—	—	216	—	—	120		
	256-byte		—	—	216	—	—	120		

RA生态工作室

Table 2.45 Data flash memory characteristics (2 of 2)

Conditions: Program or erase: FCLK = 4 to 50 MHz
Read: FCLK ≤ 50 MHz

Parameter		Symbol	FCLK = 4 MHz			20 MHz ≤ FCLK ≤ 50 MHz			Unit	Test conditions
			Min	Typ*6	Max	Min	Typ*6	Max		
Second suspend delay during erasure in suspend priority mode	64-byte	t_{DSESD2}	—	—	300	—	—	300	μs	
	128-byte		—	—	390	—	—	390		
	256-byte		—	—	570	—	—	570		
Suspend delay during erasing in erasure priority mode	64-byte	t_{DSEED}	—	—	300	—	—	300	μs	
	128-byte		—	—	390	—	—	390		
	256-byte		—	—	570	—	—	570		
First erasing resume time during erasure in suspend priority mode*5		t_{DREST1}	—	—	300	—	—	300	μs	
Second erasing resume time during erasure in suspend priority mode		t_{DREST2}	—	—	126	—	—	70	μs	
Erasing resume time during erasure in erasure priority mode		t_{DREET}	—	—	126	—	—	70	μs	
Forced stop command		t_{FD}	—	—	32	—	—	20	μs	
Data hold time*3		t_{DRP}	10*3 *4	—	—	10*3 *4	—	—	Year	

Note 1. The reprogram/erase cycle is the number of erasures for each block. When the reprogram/erase cycle is n times (n = 125,000), erasing can be performed n times for each block. For example, when 4-byte programming is performed 16 times for different addresses in 64-byte blocks, and then the entire block is erased, the reprogram/erase cycle is counted as one. However, programming the same address several times as one erasure is not enabled. Overwriting is prohibited.
Note 2. This is the minimum number of times to guarantee all the characteristics after reprogramming. The guaranteed range is from 1 to the minimum value.
Note 3. This indicates the minimum value of the characteristic when reprogramming is performed within the specified range.
Note 4. This result is obtained from reliability testing.
Note 5. Time for resumption includes time for reapplying the erasing pulse (up to one full pulse) that was cut off at the time of suspension.
Note 6. The reference value at VCC = 3.3 V and room temperature.

2.12.3 Option Setting Memory Characteristics

Table 2.46 Option setting memory characteristics

Conditions: Program: FCLK = 4 to 50 MHz
Read: FCLK ≤ 50 MHz

Parameter	Symbol	FCLK = 4 MHz			20 MHz ≤ FCLK ≤ 50 MHz			Unit	Test conditions
		Min	Typ*4	Max	Min	Typ*4	Max		
Programming time N_{OPC} ≤ 100 times	t_{OP}	—	83	309	—	45	162	ms	
Programming time N_{OPC} > 100 times	t_{OP}	—	100	371	—	55	195	ms	
Reprogramming cycle	N_{OPC}	20000*1	—	—	20000*1	—	—	Times	
Data hold time*2	t_{DRP}	10*2 *3	—	—	10*2 *3	—	—	Years	

Note 1. This is the minimum number of times to guarantee all the characteristics after reprogramming. The guaranteed range is from 1 to the minimum value.
Note 2. This indicates the minimum value of the characteristic when reprogramming is performed within the specified range.
Note 3. This result is obtained from reliability testing.
Note 4. The reference value at VCC = 3.3 V and room temperature.

2.13 Boundary Scan

Table 2.45 数据闪存特性(2of2)

条件：编程或擦除：FCLK=4至50MHz
Read: FCLK ≤ 50 MHz

Parameter		Symbol	FCLK = 4 MHz			20 MHz ≤ FCLK ≤ 50 MHz			Unit	测试条件
			Min	典型*6最大值最小值			Typ*6	Max		
挂起优先模式下擦除期间的第二挂起延迟	64-byte	t_{DSESD2}	—	—	300	—	—	300	μs	
	128-byte		—	—	390	—	—	390		
	256-byte		—	—	570	—	—	570		
在擦除优先模式下擦除期间暂停延迟	64-byte	t_{DSEED}	—	—	300	—	—	300	μs	
	128-byte		—	—	390	—	—	390		
	256-byte		—	—	570	—	—	570		
挂起优先模式擦除期间的第一次擦除恢复时间*5		t_{DREST1}	—	—	300	—	—	300	μs	
挂起优先模式下擦除期间的第二次擦除恢复时间		t_{DREST2}	—	—	126	—	—	70	μs	
在擦除优先模式下擦除期间擦除恢复时间		t_{DREET}	—	—	126	—	—	70	μs	
强制停止命令		t_{FD}	—	—	32	—	—	20	μs	
数据保持时间*3		t_{DRP}	10*3 *4	—	—	10*3 *4	—	—	Year	

注1.重新编程擦除周期是每个块的擦除次数。当重新编程擦除周期为n次（n=125 000）时，可以对每个块执行n次擦除。例如，当对64字节块中的不同地址执行16次4字节编程，然后擦除整个块时，重新编程擦除周期计为1。但是，不能将同一地址多次编程为一次擦除。禁止覆盖。

注2.这是重新编程后保证所有特性的最少次数。保证范围是从1到最小值。

注3.这表示在指定范围内执行重新编程时特性的最小值。
注4：此结果来自可靠性测试。
注5.恢复时间包括重新应用暂停时切断的擦除脉冲（最多1个完整脉冲）的时间。
注6.VCC=3.3V和室温下的参考值。

2.12.3 选项设置内存特性

Table 2.46 选项设置内存特性

Conditions: Program: FCLK = 4 to 50 MHz
Read: FCLK ≤ 50 MHz

Parameter	Symbol	FCLK = 4 MHz			20 MHz ≤ FCLK ≤ 50 MHz			Unit	测试条件
		Min	Typ*4	Max	Min	Typ*4	Max		
编程时间NOPC≤100次	t_{OP}	—	83	309	—	45	162	ms	
编程时间NOPC>100次	t_{OP}	—	100	371	—	55	195	ms	
重编程周期	N_{OPC}	20000*1	—	—	20000*1	—	—	Times	
数据保持时间*2	t_{DRP}	10*2 *3	—	—	10*2 *3	—	—	Years	

注1.这是重新编程后保证所有特性的最少次数。保证范围是从1到最小值。

注2.这表示在指定范围内执行重新编程时特性的最小值。
注3：此结果来自可靠性测试。
注4.VCC=3.3V和室温下的参考值。

2.13 边界扫描

RA生态工作室

Table 2.47 Boundary scan characteristics

Parameter	Symbol	Min	Typ	Max	Unit	Test conditions
TCK clock cycle time	t_{TCKcyc}	100	—	—	ns	Figure 2.63
TCK clock high pulse width	t_{TCKH}	45	—	—	ns	
TCK clock low pulse width	t_{TCKL}	45	—	—	ns	
TCK clock rise time	t_{TCKr}	—	—	5	ns	
TCK clock fall time	t_{TCKf}	—	—	5	ns	
TMS setup time	t_{TMSS}	20	—	—	ns	Figure 2.64
TMS hold time	t_{TMSH}	20	—	—	ns	
TDI setup time	t_{TDIS}	20	—	—	ns	
TDI hold time	t_{TDIH}	20	—	—	ns	
TDO data delay	t_{TDOD}	—	—	40	ns	
Boundary scan circuit startup time*1	T_{BSSTUP}	t_{RESWP}	—	—	—	Figure 2.65

Note 1. Boundary scan does not function until the power-on reset becomes negative.

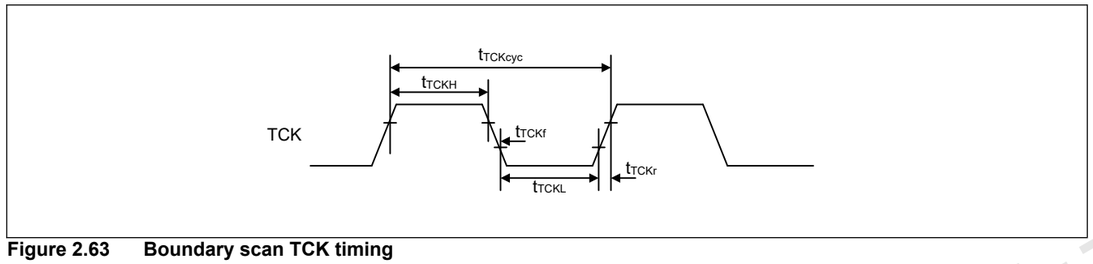

Figure 2.63 Boundary scan TCK timing

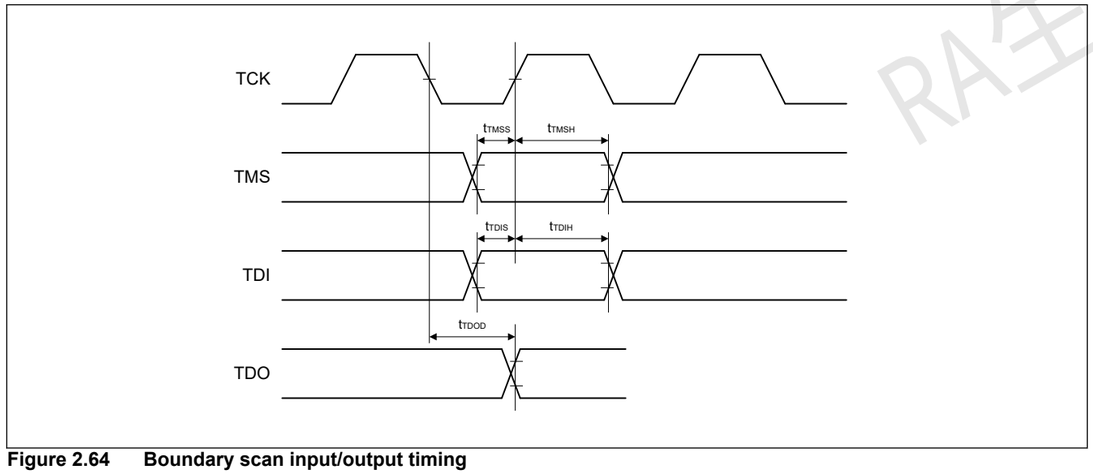

Figure 2.64 Boundary scan input/output timing

Table 2.47 边界扫描特性

Parameter	Symbol	Min	Typ	Max	Unit	测试条件
TCK时钟周期时间	t_{TCKcyc}	100	—	—	ns	Figure 2.63
TCK时钟高脉冲宽度	t_{TCKH}	45	—	—	ns	
TCK时钟低脉冲宽度	t_{TCKL}	45	—	—	ns	
TCK时钟上升时间	t_{TCKr}	—	—	5	ns	
TCK时钟下降时间	t_{TCKf}	—	—	5	ns	
TMS设置时间	t_{TMSS}	20	—	—	ns	Figure 2.64
TMS保持时间	t_{TMSH}	20	—	—	ns	
TDI建立时间	t_{TDIS}	20	—	—	ns	
TDI保持时间	t_{TDIH}	20	—	—	ns	
TDO数据延迟	t_{TDOD}	—	—	40	ns	
边界扫描电路启动时间*1	T_{BSSTUP}	t_{RESWP}	—	—	—	Figure 2.65

注1.在上电复位变为负值之前，边界扫描不起作用。

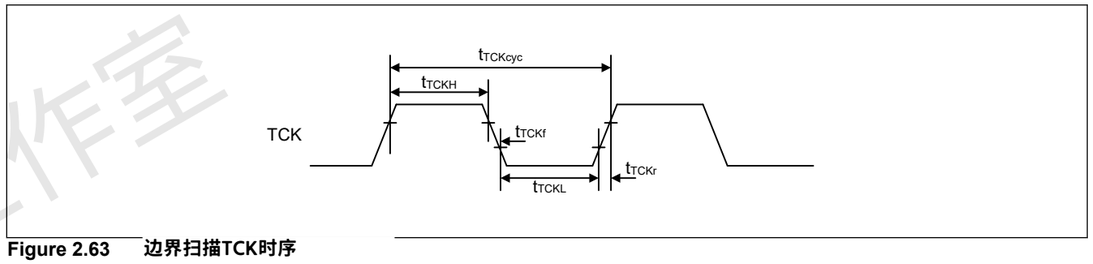

Figure 2.63 边界扫描TCK时序

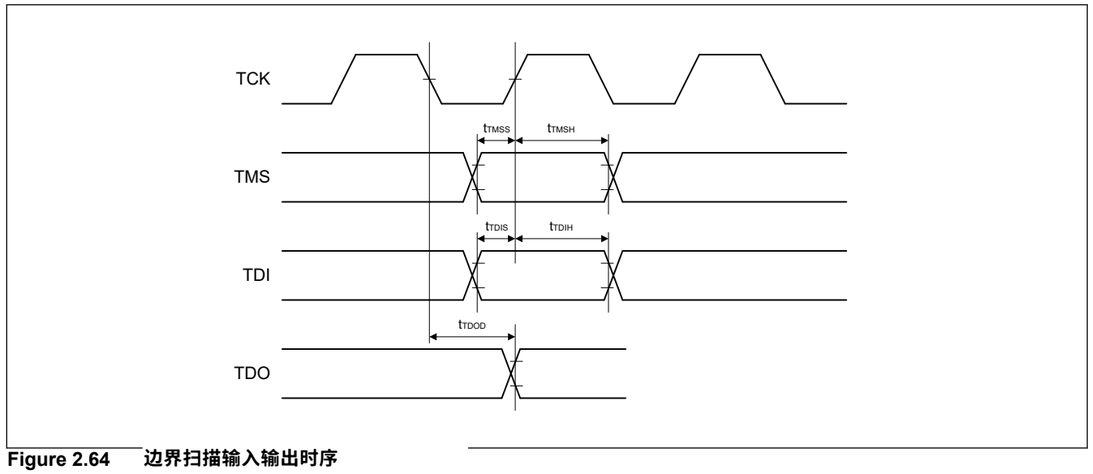

Figure 2.64 边界扫描输入输出时序

RA生态工作室

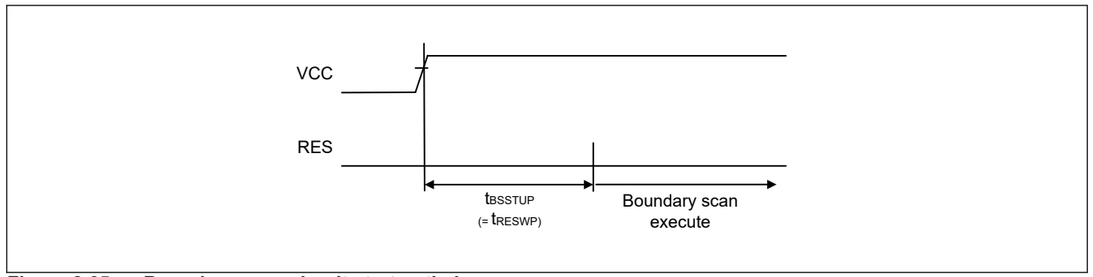

Figure 2.65 Boundary scan circuit startup timing

2.14 Joint European Test Action Group (JTAG)

Table 2.48 JTAG

Parameter	Symbol	Min	Typ	Max	Unit	Test conditions
TCK clock cycle time	t_{TCKcyc}	40	—	—	ns	Figure 2.66
TCK clock high pulse width	t_{TCKH}	15	—	—	ns	
TCK clock low pulse width	t_{TCKL}	15	—	—	ns	
TCK clock rise time	t_{TCKr}	—	—	5	ns	
TCK clock fall time	t_{TCKf}	—	—	5	ns	
TMS setup time	t_{TMSS}	8	—	—	ns	Figure 2.67
TMS hold time	t_{TMSH}	8	—	—	ns	
TDI setup time	t_{TDIS}	8	—	—	ns	
TDI hold time	t_{TDIH}	8	—	—	ns	
TDO data delay time	t_{TDOD}	—	—	20	ns	

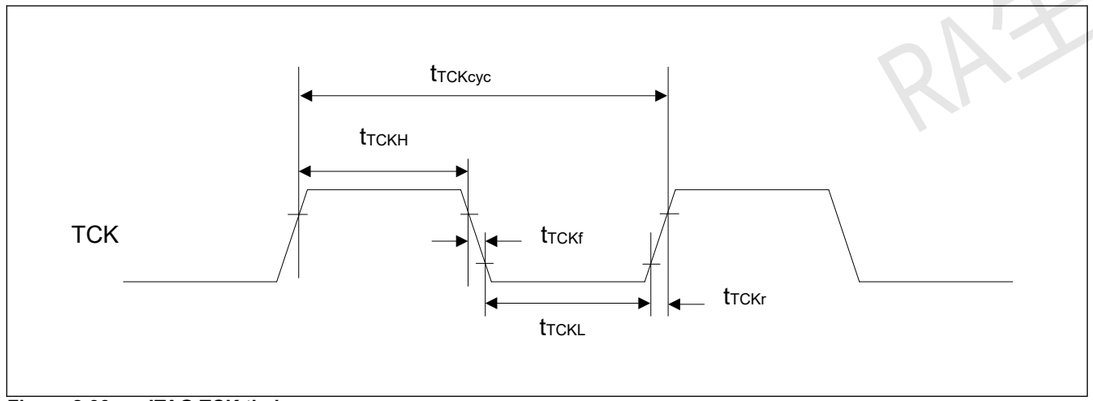

Figure 2.66 JTAG TCK timing

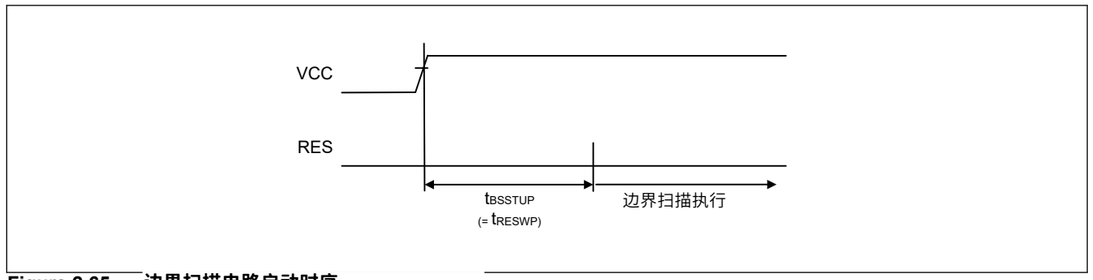

Figure 2.65 边界扫描电路启动时序

2.14 欧洲联合测试行动小组(JTAG)

Table 2.48 JTAG

Parameter	Symbol	Min	Typ	Max	Unit	测试条件
TCK时钟周期时间	t_{TCKcyc}	40	—	—	ns	Figure 2.66
TCK时钟高脉冲宽度	t_{TCKH}	15	—	—	ns	
TCK时钟低脉冲宽度	t_{TCKL}	15	—	—	ns	
TCK时钟上升时间	t_{TCKr}	—	—	5	ns	
TCK时钟下降时间	t_{TCKf}	—	—	5	ns	
TMS设置时间	t_{TMSS}	8	—	—	ns	Figure 2.67
TMS保持时间	t_{TMSH}	8	—	—	ns	
TDI建立时间	t_{TDIS}	8	—	—	ns	
TDI保持时间	t_{TDIH}	8	—	—	ns	
TDO数据延迟时间	t_{TDOD}	—	—	20	ns	

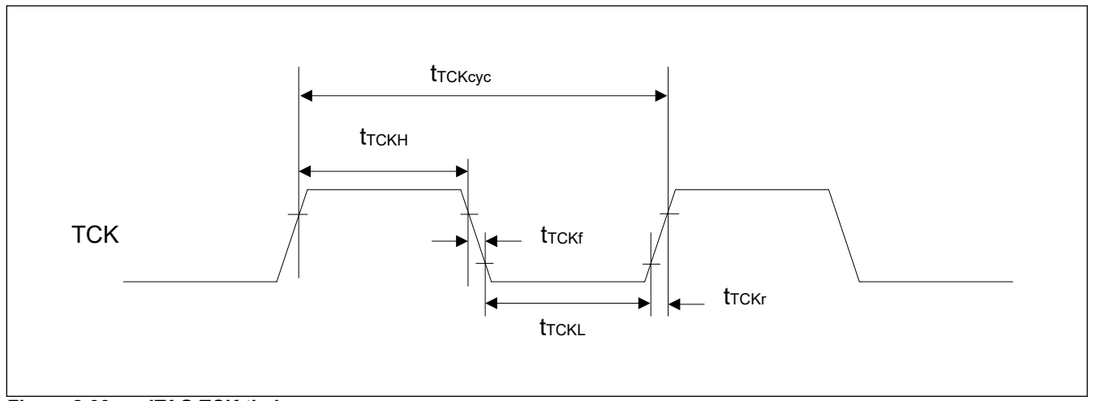

Figure 2.66 JTAG TCK timing

RA生态工作室

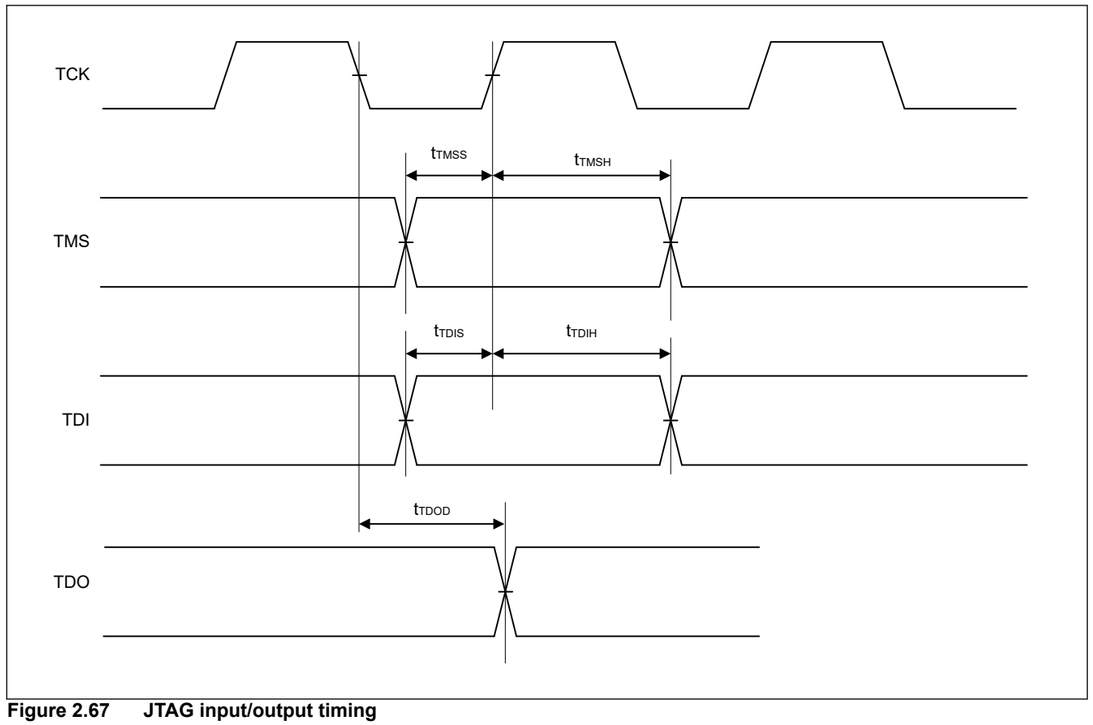

Figure 2.67 JTAG input/output timing

2.15 Serial Wire Debug (SWD)

Table 2.49 SWD

Parameter	Symbol	Min	Typ	Max	Unit	Test conditions
SWCLK clock cycle time	$t_{SWCKcyc}$	40	—	—	ns	Figure 2.68
SWCLK clock high pulse width	t_{SWCKH}	15	—	—	ns	
SWCLK clock low pulse width	t_{SWCKL}	15	—	—	ns	
SWCLK clock rise time	t_{SWCKr}	—	—	5	ns	
SWCLK clock fall time	t_{SWCKf}	—	—	5	ns	
SWDIO setup time	t_{SWDS}	8	—	—	ns	Figure 2.69
SWDIO hold time	t_{SWDH}	8	—	—	ns	
SWDIO data delay time	t_{SWDD}	2	—	28	ns	

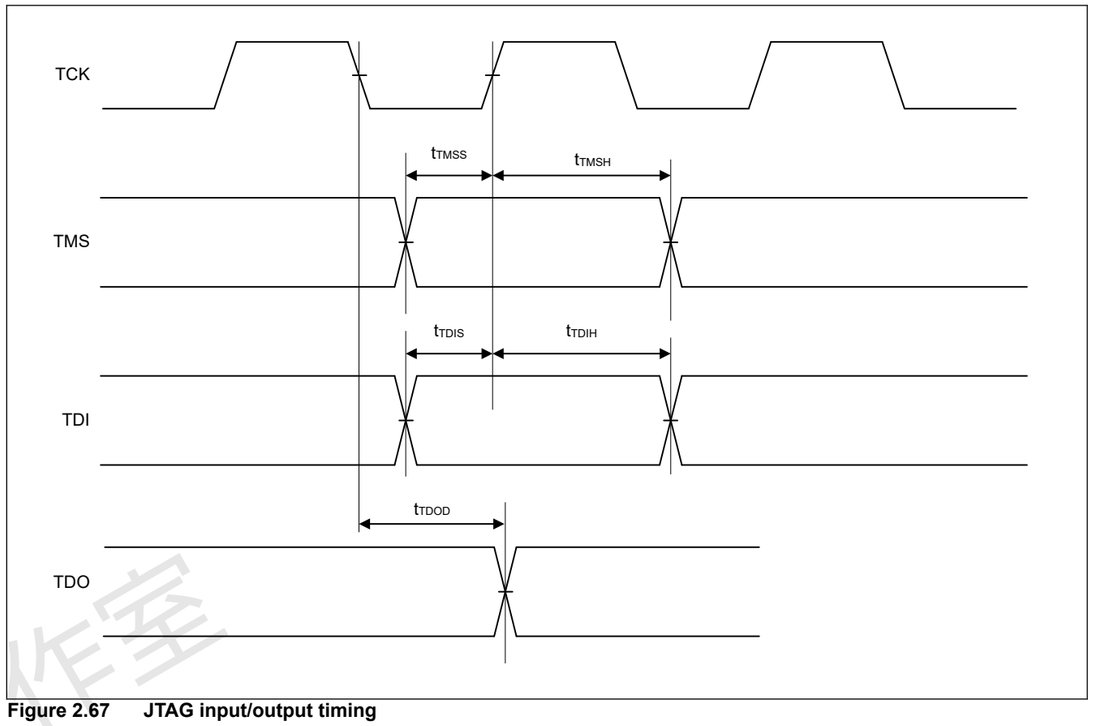

Figure 2.67 JTAG input/output timing

2.15 串行线调试(SWD)

Table 2.49 SWD

Parameter	Symbol	Min	Typ	Max	Unit	测试条件
SWCLK时钟周期时间	$t_{SWCKcyc}$	40	—	—	ns	Figure 2.68
SWCLK时钟高脉冲宽度	t_{SWCKH}	15	—	—	ns	
SWCLK时钟低脉冲宽度	t_{SWCKL}	15	—	—	ns	
SWCLK时钟上升时间	t_{SWCKr}	—	—	5	ns	
SWCLK时钟下降时间	t_{SWCKf}	—	—	5	ns	
SWDIO设置时间	t_{SWDS}	8	—	—	ns	Figure 2.69
SWDIO保持时间	t_{SWDH}	8	—	—	ns	
SWDIO数据延迟时间	t_{SWDD}	2	—	28	ns	

RA生态工作室

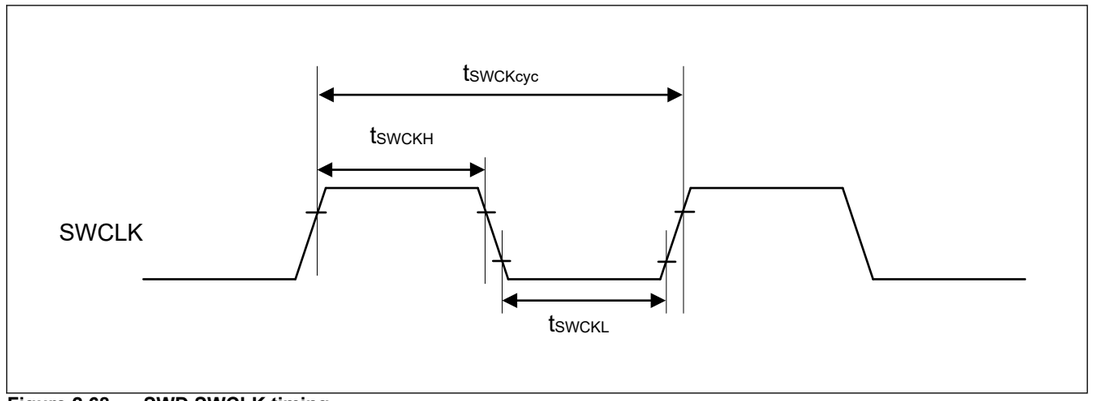

Figure 2.68 SWD SWCLK timing

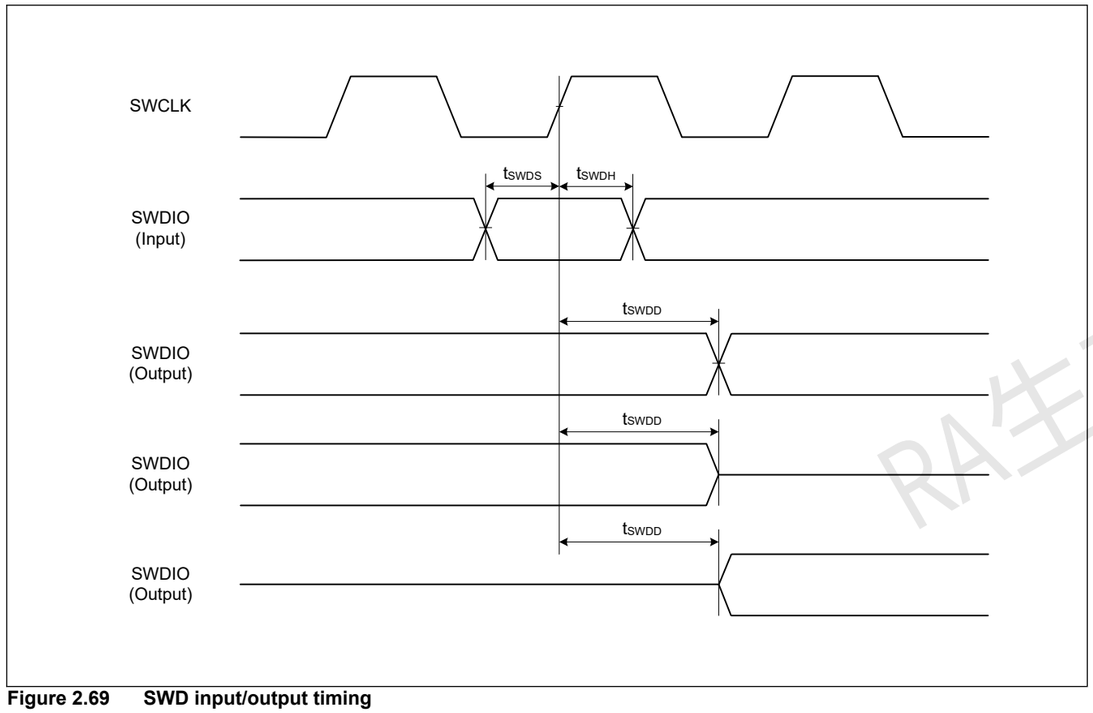

Figure 2.69 SWD input/output timing

2.16 Embedded Trace Macro Interface (ETM)

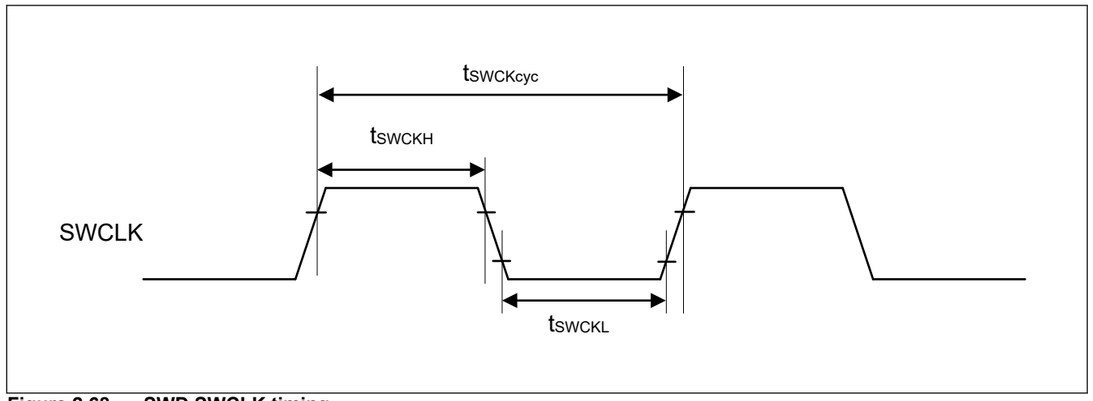

Figure 2.68 SWD SWCLK timing

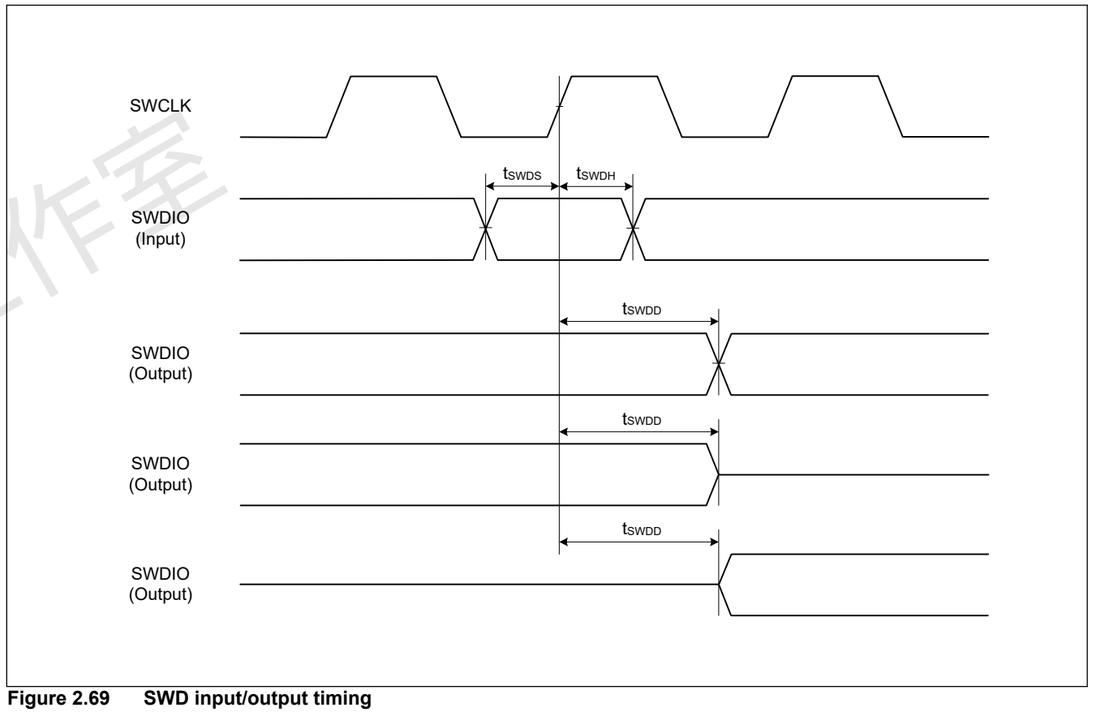

Figure 2.69 SWD input/output timing

2.16 嵌入式跟踪宏接口(ETM)

RA生态工作室

Table 2.50 ETM

Conditions: High speed high drive output is selected in the Port Drive Capability bit in the PmnPFS register.

Parameter	Symbol	Min	Typ	Max	Unit	Test conditions
TCLK clock cycle time	$t_{TCLKcyc}$	40	—	—	ns	Figure 2.70
TCLK clock high pulse width	t_{TCLKH}	17	—	—	ns	
TCLK clock low pulse width	t_{TCLKL}	17	—	—	ns	
TCLK clock rise time	t_{TCLKr}	—	—	3	ns	
TCLK clock fall time	t_{TCLKf}	—	—	3	ns	
TDATA[3:0] output setup time	t_{TRDS}	3.5	—	—	ns	Figure 2.71
TDATA[3:0] output hold time	t_{TRDH}	2.5	—	—	ns	

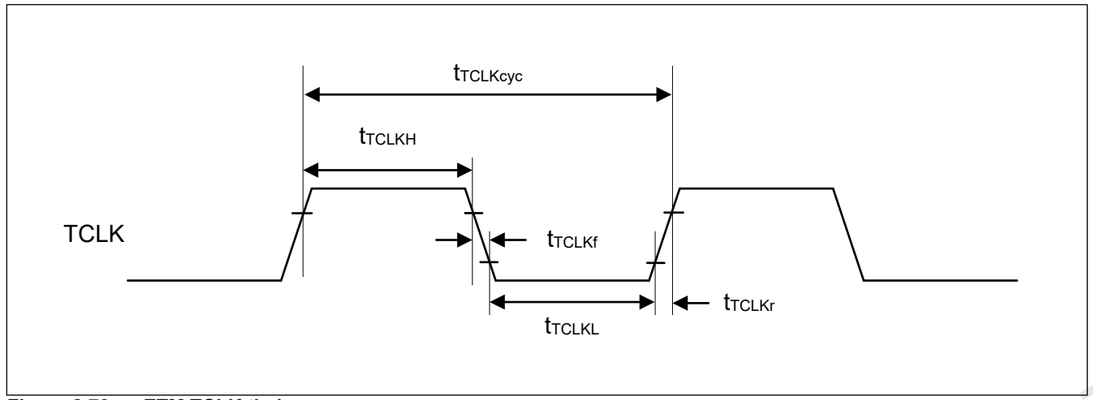

Figure 2.70 ETM TCLK timing

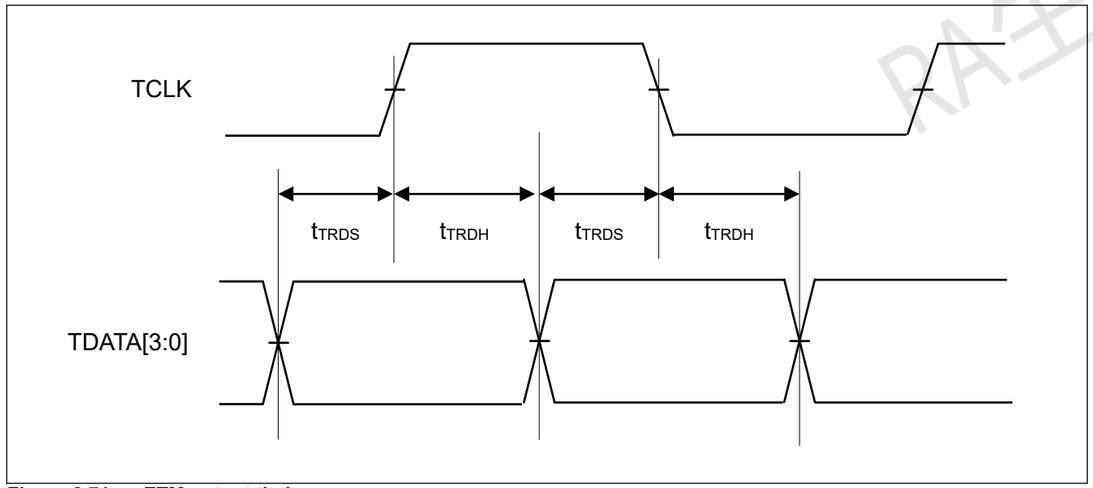

Figure 2.71 ETM output timing

Table 2.50 ETM

条件：在PmnPFS寄存器的端口驱动能力位中选择高速高驱动输出。

Parameter	Symbol	Min	Typ	Max	Unit	测试条件
TCLK时钟周期时间	$t_{TCLKcyc}$	40	—	—	ns	Figure 2.70
TCLK时钟高脉冲宽度	t_{TCLKH}	17	—	—	ns	
TCLK时钟低脉冲宽度	t_{TCLKL}	17	—	—	ns	
TCLK时钟上升时间	t_{TCLKr}	—	—	3	ns	
TCLK时钟下降时间	t_{TCLKf}	—	—	3	ns	
TDATA[3:0]输出建立时间	t_{TRDS}	3.5	—	—	ns	Figure 2.71
TDATA[3:0]输出保持时间	t_{TRDH}	2.5	—	—	ns	

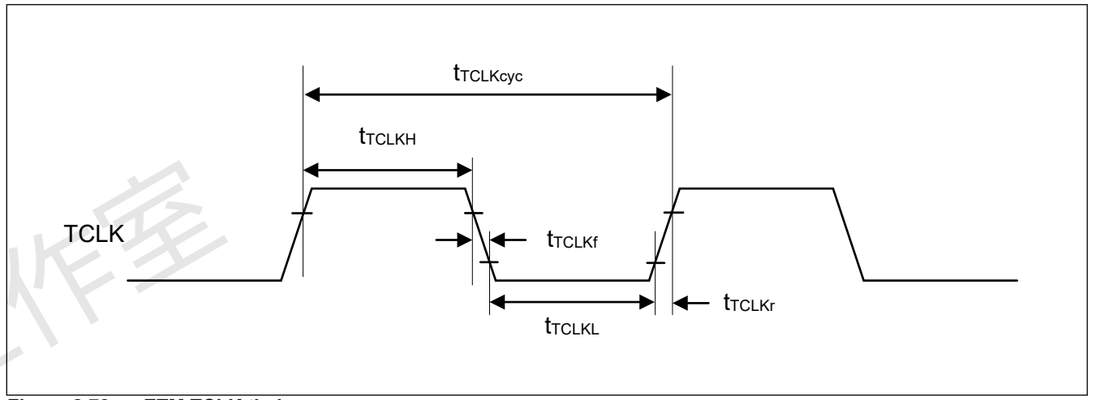

Figure 2.70 ETM TCLK timing

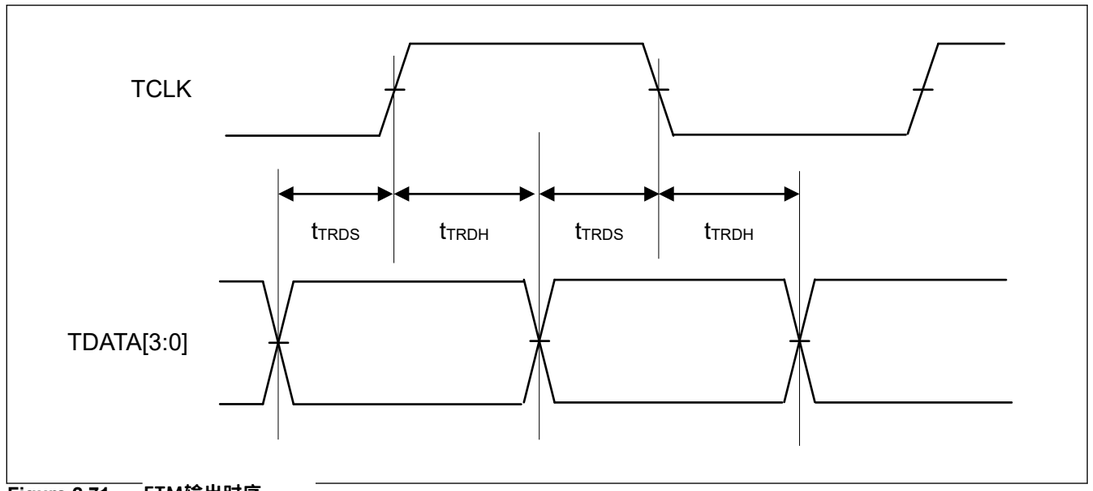

Figure 2.71 ETM输出时序

RA生态工作室

Appendix 1. Port States in Each Processing Mode

Function	Pin function	Reset	Software Standby mode	Deep Software Standby mode	After Deep Software Standby mode is canceled (return to startup mode)	
					IOKEEP = 0	IOKEEP = 1*1
Mode	MD	Pull-up	Keep-O	Keep	Hi-Z	Keep
JTAG	TCK/TMS/TDI	Pull-up	Keep-O	Keep	Hi-Z	Keep
	TDO	output	Keep-O	Keep	TDO output	Keep
IRQ	IRQx	Hi-Z	Keep-O*2	Keep	Hi-Z	Keep
	IRQx-DS	Hi-Z	Keep-O*2	Keep*3	Hi-Z	Keep
AGT	AGTIOn	Hi-Z	Keep-O*2	Keep	Hi-Z	Keep
	AGTIOn (n=1,3)	Hi-Z	Keep-O*2	Keep*3	Hi-Z	Keep
SCI	RXD0	Hi-Z	Keep-O*2	Keep	Hi-Z	Keep
IIC	SCLn/SDAn	Hi-Z	Keep-O*2	Keep	Hi-Z	Keep
USBFS	USB_OVRCURx	Hi-Z	Keep-O*2	Keep	Hi-Z	Keep
	USB_OVRCURx-DS/ USB_VBUS	Hi-Z	Keep-O*2	Keep*3	Hi-Z	Keep
	USB_DP/USB_DM	Hi-Z	Keep-O*4	Keep*3	Hi-Z	Keep
RTC	RTCICx	Hi-Z	Keep-O*2	Keep*3	Hi-Z	Keep
	RTCOUT	Hi-Z	[RTCOUT selected] RTCOUT output	Keep	Hi-Z	Keep
CLKOUT	CLKOUT	Hi-Z	[CLKOUT selected] CLKOUT output	Keep	Hi-Z	Keep
DAC	DAn	Hi-Z	[DAn output (DAOE = 1)] D/A output retained	Keep	Hi-Z	Keep
Others	—	Hi-Z	Keep-O	Keep	Hi-Z	Keep

Note: H: High-level
L: Low-level
Hi-Z: High-impedance
Keep-O: Output pins retain their previous values. Input pins go to high-impedance.
Keep: Pin states are retained during periods in Software Standby mode.
Note 1. Retains the I/O port state until the DPSBYCR.IOKEEP bit is cleared to 0.
Note 2. Input is enabled if the pin is specified as the Software Standby canceling source while it is used as an external interrupt pin.
Note 3. Input is enabled if the pin is specified as the Deep Software Standby canceling source.
Note 4. Input is enabled while the pin is used as an input pin.

Appendix 1. 每种处理模式下的端口状态

Function	引脚功能	Reset	软件待机模式	深度软件待机模式	取消深度软件待机模式后（返回启动模式）	
					IOKEEP = 0	IOKEEP = 1*1
Mode	MD	Pull-up	Keep-O	Keep	Hi-Z	Keep
JTAG	TCK/TMS/TDI	Pull-up	Keep-O	Keep	Hi-Z	Keep
	TDO	output	Keep-O	Keep	TDO输出	Keep
IRQ	IRQx	Hi-Z	Keep-O*2	Keep	Hi-Z	Keep
	IRQx-DS	Hi-Z	Keep-O*2	Keep*3	Hi-Z	Keep
AGT	AGTIOn	Hi-Z	Keep-O*2	Keep	Hi-Z	Keep
	AGTIOn (n=1,3)	Hi-Z	Keep-O*2	Keep*3	Hi-Z	Keep
SCI	RXD0	Hi-Z	Keep-O*2	Keep	Hi-Z	Keep
IIC	SCLn/SDAn	Hi-Z	Keep-O*2	Keep	Hi-Z	Keep
USBFS	USB_OVRCURx	Hi-Z	Keep-O*2	Keep	Hi-Z	Keep
	USB_OVRCURx-DS/ USB_VBUS	Hi-Z	Keep-O*2	Keep*3	Hi-Z	Keep
	USB_DP/USB_DM	Hi-Z	Keep-O*4	Keep*3	Hi-Z	Keep
RTC	RTCICx	Hi-Z	Keep-O*2	Keep*3	Hi-Z	Keep
	RTCOUT	Hi-Z	[RTCOUT selected] RTCOUT output	Keep	Hi-Z	Keep
CLKOUT	CLKOUT	Hi-Z	[CLKOUT selected] CLKOUT output	Keep	Hi-Z	Keep
DAC	DAn	Hi-Z	[DAn输出(DAOE=1)]DA输出保留	Keep	Hi-Z	Keep
Others	—	Hi-Z	Keep-O	Keep	Hi-Z	Keep

Note: H: High-level
L: Low-level
Hi-Z: High-impedance
Keep-O：输出引脚保留其先前的值。输入引脚变为高阻抗。
保持：在软件待机模式期间保持引脚状态。
注1.保持IO端口状态直到DPSBYCR.IOKEEP位被清除为0。
注2.如果引脚被指定为软件待机取消源，同时它被用作外部中断引脚，则输入被启用。
注3.如果引脚被指定为深度软件待机取消源，则启用输入。
注4.当引脚用作输入引脚时，输入被启用。

RA生态工作室

Appendix 2. Package Dimensions

Information on the latest version of the package dimensions or mountings is displayed in “Packages” on the Renesas Electronics Corporation website.

JEITA Package Code	RENESAS Code	Previous Code	MASS (Typ) [g]
P-LFQFP100-14x14-0.50	PLQP0100KB-B	—	0.6

Unit: mm

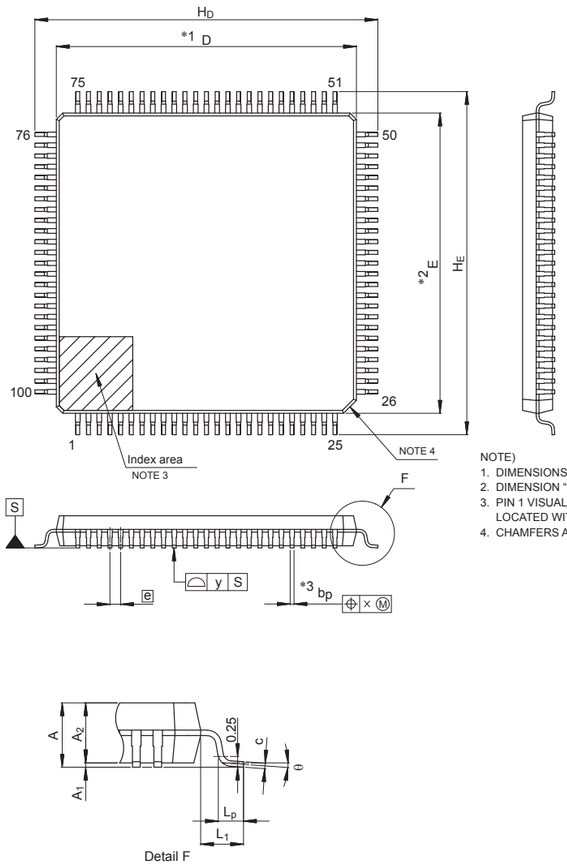

NOTE)
1. DIMENSIONS “*1” AND “*2” DO NOT INCLUDE MOLD FLASH.
2. DIMENSION “*3” DOES NOT INCLUDE TRIM OFFSET.
3. PIN 1 VISUAL INDEX FEATURE MAY VARY, BUT MUST BE LOCATED WITHIN THE HATCHED AREA.
4. CHAMFERS AT CORNERS ARE OPTIONAL, SIZE MAY VARY.

Reference Symbol	Dimensions in millimeters		
	Min	Nom	Max
D	13.9	14.0	14.1
E	13.9	14.0	14.1
A_2	—	1.4	—
H_D	15.8	16.0	16.2
H_E	15.8	16.0	16.2
A	—	—	1.7
A_1	0.05	—	0.15
b_p	0.15	0.20	0.27
c	0.09	—	0.20
θ	0°	3.5°	8°
e	—	0.5	—
x	—	—	0.08
y	—	—	0.08
L_p	0.45	0.6	0.75
L_1	—	1.0	—

© 2015 Renesas Electronics Corporation. All rights reserved.

Figure 2.1 LQFP 100-pin

Appendix 2. 包装尺寸

最新版本的封装尺寸或安装信息显示在瑞萨电子的“封装”中
电子公司网站。

JEITA包装代码	RENESAS Code	以前的代码	MASS (Typ) [g]
P-LFQFP100-14x14-0.50	PLQP0100KB-B	—	0.6

Unit: mm

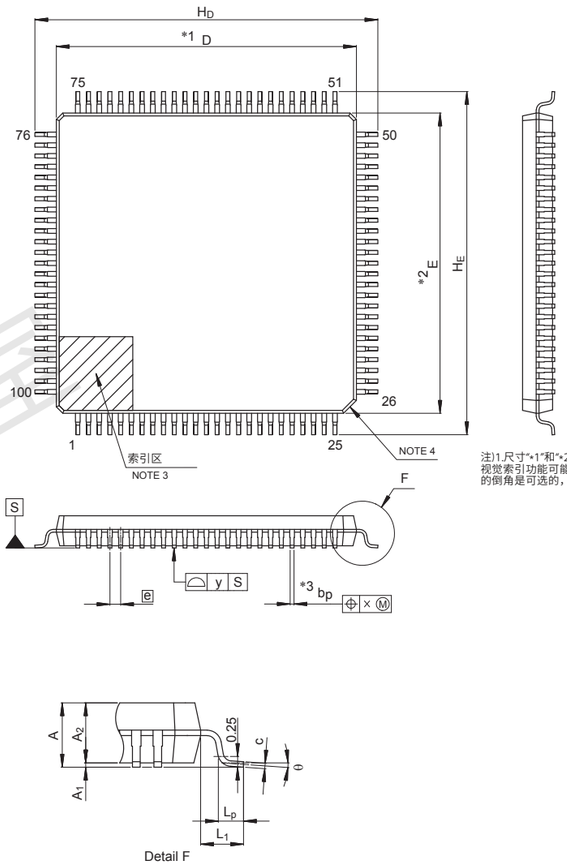

注)1.尺寸“*1”和“*2”不包括毛边。2.尺寸“*3”不包括微调偏移。3.PIN1视觉索引功能可能会有所不同，但必须位于阴影区域内。4.拐角处的倒角是可选的，尺寸可能会有所不同。

参考符号	尺寸以毫米为单位		
	Min	Nom	Max
D	13.9	14.0	14.1
E	13.9	14.0	14.1
A_2	—	1.4	—
H_D	15.8	16.0	16.2
H_E	15.8	16.0	16.2
A	—	—	1.7
A_1	0.05	—	0.15
b_p	0.15	0.20	0.27
c	0.09	—	0.20
θ	0°	3.5°	8°
e	—	0.5	—
x	—	—	0.08
y	—	—	0.08
L_p	0.45	0.6	0.75
L_1	—	1.0	—

©2015瑞萨电子公司。版权所有。

Figure 2.1 LQFP 100-pin

RA生态工作室

JEITA Package Code	RENESAS Code	Previous Code	MASS (Typ) [g]
P-LFQFP64-10x10-0.50	PLQP0064KB-C	—	0.3

Unit: mm

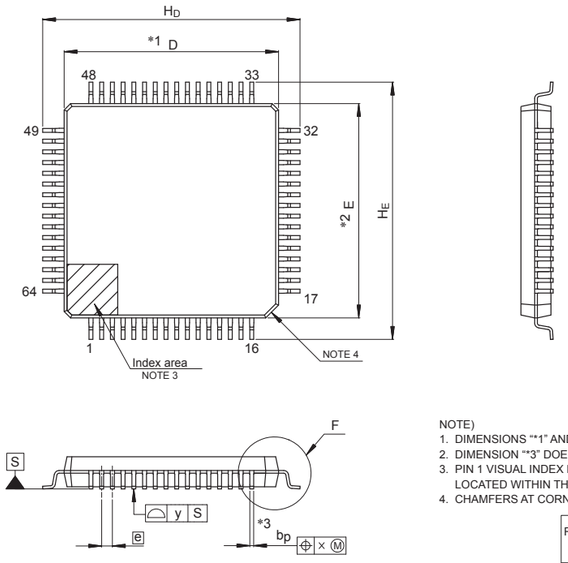

NOTE)
1. DIMENSIONS "*1" AND "*2" DO NOT INCLUDE MOLD FLASH.
2. DIMENSION "*3" DOES NOT INCLUDE TRIM OFFSET.
3. PIN 1 VISUAL INDEX FEATURE MAY VARY, BUT MUST BE LOCATED WITHIN THE HATCHED AREA.
4. CHAMFERS AT CORNERS ARE OPTIONAL, SIZE MAY VARY.

Reference Symbol	Dimensions in millimeters		
	Min	Nom	Max
D	9.9	10.0	10.1
E	9.9	10.0	10.1
A_2	—	1.4	—
H_D	11.8	12.0	12.2
H_E	11.8	12.0	12.2
A	—	—	1.7
A_1	0.05	—	0.15
b_p	0.15	0.20	0.27
c	0.09	—	0.20
θ	0°	3.5°	8°
e	—	0.5	—
x	—	—	0.08
y	—	—	0.08
L_p	0.45	0.6	0.75
L_1	—	1.0	—

© 2015 Renesas Electronics Corporation. All rights reserved.

Figure 2.2 LQFP 64-pin

JEITA包装代码	RENESAS Code	以前的代码	MASS (Typ) [g]
P-LFQFP64-10x10-0.50	PLQP0064KB-C	—	0.3

Unit: mm

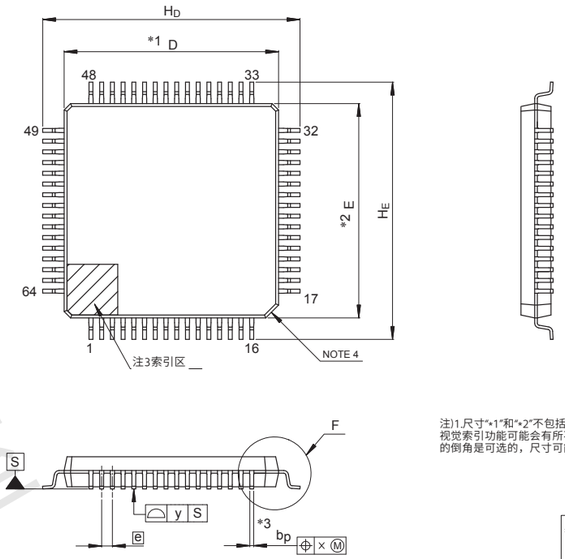

注)1.尺寸"*1"和"*2"不包括毛边。2.尺寸"*3"不包括微调偏移。3.PIN1视觉索引功能可能会有所不同，但必须位于阴影区域内。4.拐角处的倒角是可选的，尺寸可能会有所不同。

参考符号	尺寸以毫米为单位		
	Min	Nom	Max
D	9.9	10.0	10.1
E	9.9	10.0	10.1
A_2	—	1.4	—
H_D	11.8	12.0	12.2
H_E	11.8	12.0	12.2
A	—	—	1.7
A_1	0.05	—	0.15
b_p	0.15	0.20	0.27
c	0.09	—	0.20
θ	0°	3.5°	8°
e	—	0.5	—
x	—	—	0.08
y	—	—	0.08
L_p	0.45	0.6	0.75
L_1	—	1.0	—

©2015瑞萨电子公司。版权所有。

Figure 2.2 LQFP 64-pin

RA生态工作室

JEITA Package Code	RENESAS Code	Previous Code	MASS (Typ) [g]
P-LFQFP48-7x7-0.50	PLQP0048KB-B	—	0.2

Unit: mm

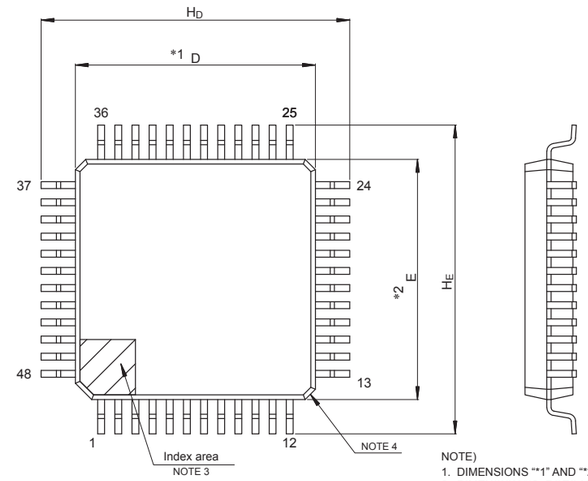

NOTE)
1. DIMENSIONS "*1" AND "*2" DO NOT INCLUDE MOLD FLASH.
2. DIMENSION "*3" DOES NOT INCLUDE TRIM OFFSET.
3. PIN 1 VISUAL INDEX FEATURE MAY VARY, BUT MUST BE LOCATED WITHIN THE HATCHED AREA.
4. CHAMFERS AT CORNERS ARE OPTIONAL, SIZE MAY VARY.

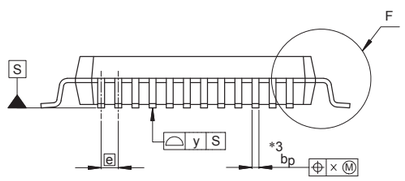

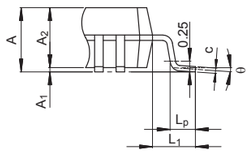

Detail F

Reference Symbol	Dimensions in millimeters		
	Min	Nom	Max
D	6.9	7.0	7.1
E	6.9	7.0	7.1
A_2	—	1.4	—
H_D	8.8	9.0	9.2
H_E	8.8	9.0	9.2
A	—	—	1.7
A_1	0.05	—	0.15
b_p	0.17	0.20	0.27
c	0.09	—	0.20
θ	0°	3.5°	8°
e	—	0.5	—
x	—	—	0.08
y	—	—	0.08
L_p	0.45	0.6	0.75
L_1	—	1.0	—

© 2015 Renesas Electronics Corporation. All rights reserved.

Figure 2.3 LQFP 48-pin

JEITA包装代码	RENESAS Code	以前的代码	MASS (Typ) [g]
P-LFQFP48-7x7-0.50	PLQP0048KB-B	—	0.2

Unit: mm

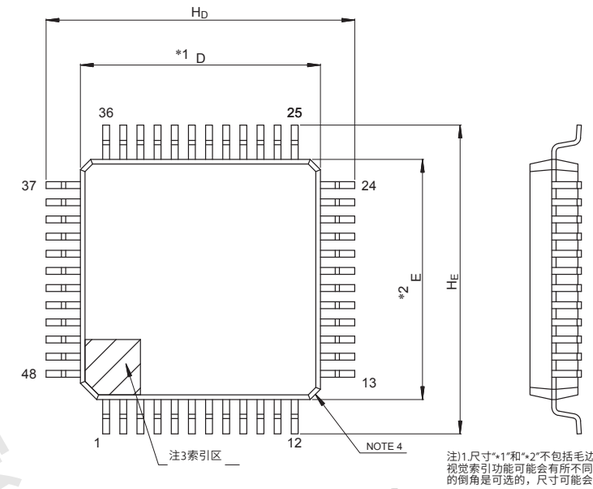

注)1.尺寸"*1"和"*2"不包括毛边。2.尺寸"*3"不包括微调偏移。3.PIN1视觉索引功能可能会有所不同，但必须位于阴影区域内。4.拐角处的倒角是可选的，尺寸可能会有所不同。

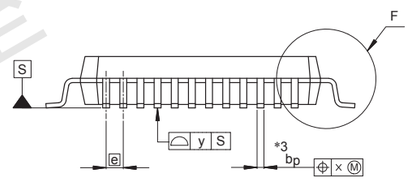

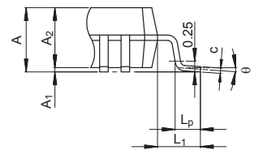

Detail F

参考符号	尺寸以毫米为单位		
	Min	Nom	Max
D	6.9	7.0	7.1
E	6.9	7.0	7.1
A_2	—	1.4	—
H_D	8.8	9.0	9.2
H_E	8.8	9.0	9.2
A	—	—	1.7
A_1	0.05	—	0.15
b_p	0.17	0.20	0.27
c	0.09	—	0.20
θ	0°	3.5°	8°
e	—	0.5	—
x	—	—	0.08
y	—	—	0.08
L_p	0.45	0.6	0.75
L_1	—	1.0	—

©2015瑞萨电子公司。版权所有。

Figure 2.3 LQFP 48-pin

RA生态工作室

JEITA Package code	RENESAS code	MASS(TYP.)[g]
P-HWQFN048-7x7-0.50	PWQN0048KC-A	0.13 g

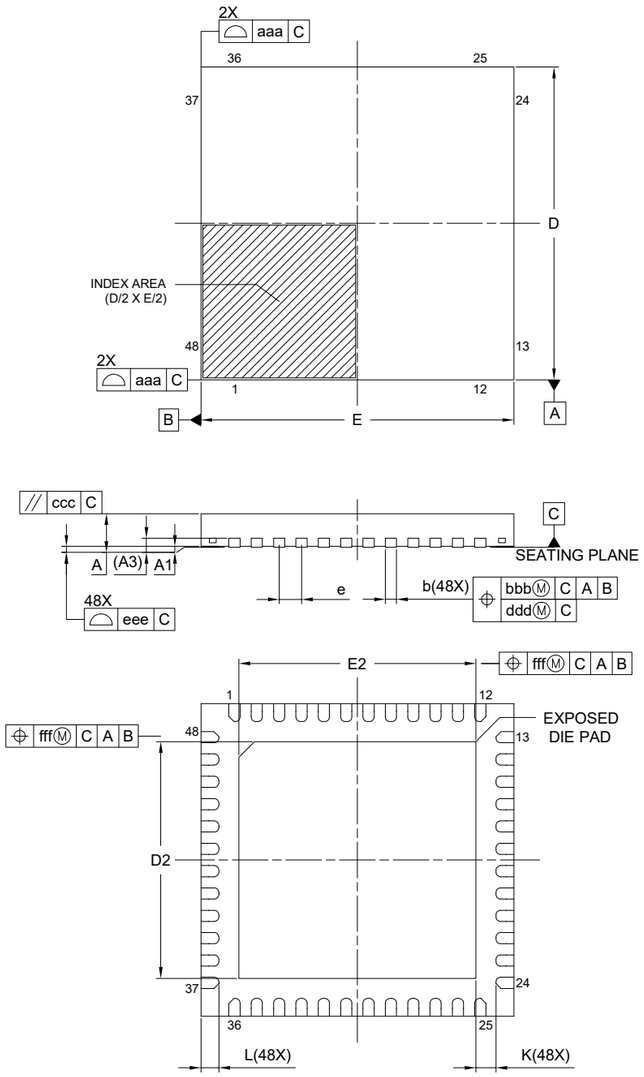

Reference Symbol	Dimension in Millimeters		
	Min.	Nom.	Max.
A	—	—	0.80
A_1	0.00	0.02	0.05
A_3	0.203 REF.		
b	0.20	0.25	0.30
D	7.00 BSC		
E	7.00 BSC		
e	0.50 BSC		
L	0.30	0.40	0.50
K	0.20	—	—
D_2	5.25	5.30	5.35
E_2	5.25	5.30	5.35
aaa	0.15		
bbb	0.10		
ccc	0.10		
ddd	0.05		
eee	0.08		
fff	0.10		

Figure 2.4 QFN 48-pin

JEITA包装代码	RENESAS code	MASS(TYP.)[g]
P-HWQFN048-7x7-0.50	PWQN0048KC-A	0.13 g

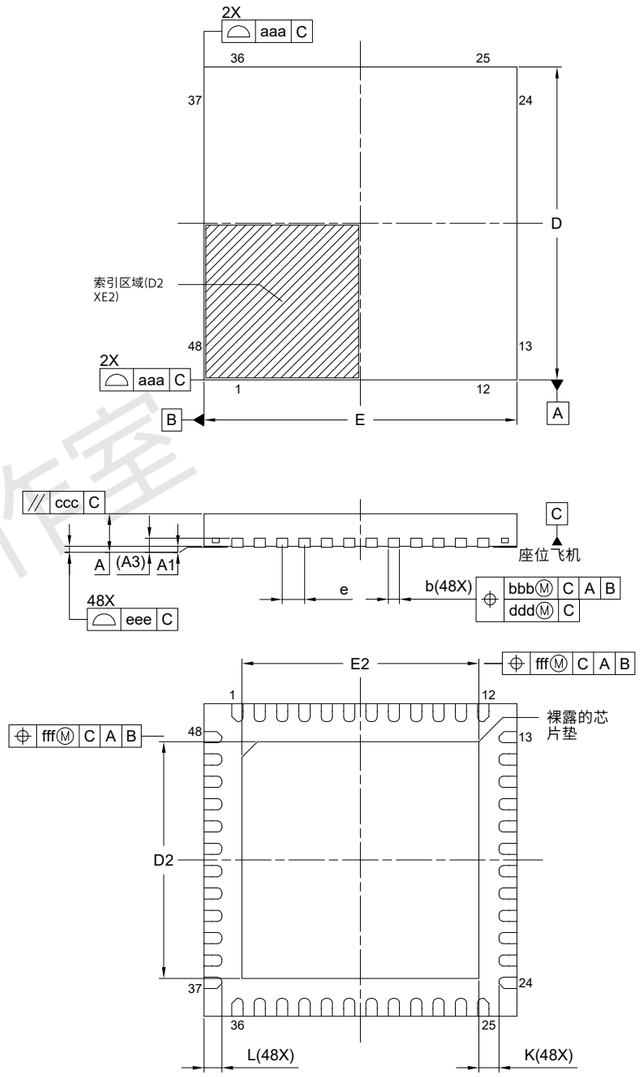

Reference Symbol	以毫米为单位的尺寸		
	Min.	Nom.	Max.
A	—	—	0.80
A_1	0.00	0.02	0.05
A_3	0.203 REF.		
b	0.20	0.25	0.30
D	7.00 BSC		
E	7.00 BSC		
e	0.50 BSC		
L	0.30	0.40	0.50
K	0.20	—	—
D_2	5.25	5.30	5.35
E_2	5.25	5.30	5.35
aaa	0.15		
bbb	0.10		
ccc	0.10		
ddd	0.05		
eee	0.08		
fff	0.10		

Figure 2.4 QFN 48-pin

IAR生态工作室

Appendix 3. I/O Registers

This appendix describes I/O register address and access cycles by function.

3.1 Peripheral Base Addresses

This section provides the base addresses for peripherals described in this manual. Table 3.1 shows the name, description, and the base address of each peripheral.

Table 3.1 Peripheral base address (1 of 3)

Name	Description	Base address
RMPU	Renesas Memory Protection Unit	0x4000_0000
TZF	TrustZone Filter	0x4000_0E00
SRAM	SRAM Control	0x4000_2000
BUS	BUS Control	0x4000_3000
DMAC0	Direct memory access controller 0	0x4000_5000
DMAC1	Direct memory access controller 1	0x4000_5040
DMAC2	Direct memory access controller 2	0x4000_5080
DMAC3	Direct memory access controller 3	0x4000_50C0
DMAC4	Direct memory access controller 4	0x4000_5100
DMAC5	Direct memory access controller 5	0x4000_5140
DMAC6	Direct memory access controller 6	0x4000_5180
DMAC7	Direct memory access controller 7	0x4000_51C0
DMA	DMAC Module Activation	0x4000_5200
DTC	Data Transfer Controller	0x4000_5400
ICU	Interrupt Controller	0x4000_6000
CPSCU	CPU System Security Control Unit	0x4000_8000
DBG	Debug Function	0x400_1B000
FCACHE	Flash Cache	0x400_1C100
SYSC	System Control	0x4001_E000
PORT0	Port 0 Control Registers	0x4008_0000
PORT1	Port 1 Control Registers	0x4008_0020
PORT2	Port 2 Control Registers	0x4008_0040
PORT3	Port 3 Control Registers	0x4008_0060
PORT4	Port 4 Control Registers	0x4008_0080
PORT5	Port 5 Control Registers	0x4008_00A0
PORT6	Port 6 Control Registers	0x4008_00C0
PORT7	Port 7 Control Registers	0x4008_00E0
PORT8	Port 8 Control Registers	0x4008_0100
PORT9	Port9 Control Registers	0x40080120
PORTA	Port A Control Registers	0x40080140
PORTB	Port B Control Registers	0x40080160
PFS	Pmn Pin Function Control Register	0x4008_0800
ELC	Event Link Controller	0x4008_2000
RTC	Realtime Clock	0x4008_3000
IWDT	Independent Watchdog Timer	0x4008_3200

Appendix 3. I/O Registers

本附录按功能描述了IO寄存器地址和访问周期。

3.1 外设基地址

本节提供本手册中描述的外设的基地址。表3.1显示了每个外设的名称、描述和基地址。

Table 3.1 外设基地址(1of3)

Name	Description	基址
RMPU	瑞萨内存保护单元	0x4000_0000
TZF	TrustZone Filter	0x4000_0E00
SRAM	SRAM Control	0x4000_2000
BUS	总线控制	0x4000_3000
DMAC0	直接内存访问控制器0	0x4000_5000
DMAC1	直接内存访问控制器1	0x4000_5040
DMAC2	直接内存访问控制器2	0x4000_5080
DMAC3	直接内存访问控制器3	0x4000_50C0
DMAC4	直接内存访问控制器4	0x4000_5100
DMAC5	直接内存访问控制器5	0x4000_5140
DMAC6	直接内存访问控制器6	0x4000_5180
DMAC7	直接内存访问控制器7	0x4000_51C0
DMA	DMAC模块激活	0x4000_5200
DTC	数据传输控制器	0x4000_5400
ICU	中断控制器	0x4000_6000
CPSCU	CPU系统安全控制单元	0x4000_8000
DBG	调试功能	0x400_1B000
FCACHE	闪存缓存	0x400_1C100
SYSC	系统控制	0x4001_E000
PORT0	端口0控制寄存器	0x4008_0000
PORT1	端口1控制寄存器	0x4008_0020
PORT2	端口2控制寄存器	0x4008_0040
PORT3	端口3控制寄存器	0x4008_0060
PORT4	端口4控制寄存器	0x4008_0080
PORT5	端口5控制寄存器	0x4008_00A0
PORT6	端口6控制寄存器	0x4008_00C0
PORT7	端口7控制寄存器	0x4008_00E0
PORT8	端口8控制寄存器	0x4008_0100
PORT9	端口9控制寄存器	0x40080120
PORTA	端口A控制寄存器	0x40080140
PORTB	端口B控制寄存器	0x40080160
PFS	Pmn引脚功能控制寄存器	0x4008_0800
ELC	事件链接控制器	0x4008_2000
RTC	实时时钟	0x4008_3000
IWDT	独立看门狗定时器	0x4008_3200

RA生态工作室

Table 3.1 Peripheral base address (2 of 3)

Name	Description	Base address
WDT	Watchdog Timer	0x4008_3400
CAC	Clock Frequency Accuracy Measurement Circuit	0x4008_3600
MSTP	Module Stop Control A, B, C, D	0x4008_4000
POEG	Port Output Enable Module for GPT	0x4008_A000
USBFS	USB 2.0 FS Module	0x4009_0000
SDHI0	SD Host Interface 0	0x4009_2000
SSIE0	Serial Sound Interface Enhanced (SSIE)	0x4009_D000
IIC0	Inter-Integrated Circuit 0	0x4009_F000
IIC0WU	Inter-Integrated Circuit 0 Wake-up Unit	0x4009_F014
IIC1	Inter-Integrated Circuit 1	0x4009_F100
CAN0	CAN0 Module	0x400A_8000
CAN1	CAN1 Module	0x400A_9000
CTSU	Capacitive Touch Sensing Unit	0x400D_0000
PSCU	Peripheral Security Control Unit	0x400E_0000
AGT0	Low Power Asynchronous General purpose Timer 0	0x400E_8000
AGT1	Low Power Asynchronous General purpose Timer 1	0x400E_8100
AGT2	Low Power Asynchronous General purpose Timer 2	0x400E_8200
AGT3	Low Power Asynchronous General purpose Timer 3	0x400E_8300
AGT4	Low Power Asynchronous General purpose Timer 4	0x400E_8400
AGT5	Low Power Asynchronous General purpose Timer 5	0x400E_8500
TSN	Temperature Sensor	0x400F_3000
CRC	CRC Calculator	0x4010_8000
DOC	Data Operation Circuit	0x4010_9000
SCI0	Serial Communication Interface 0	0x4011_8000
SCI1	Serial Communication Interface 1	0x4011_8100
SCI2	Serial Communication Interface 2	0x4011_8200
SCI3	Serial Communication Interface 3	0x4011_8300
SCI4	Serial Communication Interface 4	0x4011_8400
SCI9	Serial Communication Interface 9	0x4011_8900
SPI0	Serial Peripheral Interface 0	0x4011_A000
SCE9	Secure Cryptographic Engine	0x4016_1000
GPT320	General PWM 32-Bit Timer 0	0x4016_9000
GPT321	General PWM 32-Bit Timer 1	0x4016_9100
GPT322	General PWM 32-Bit Timer 2	0x4016_9200
GPT323	General PWM 32-Bit Timer 3	0x4016_9300
GPT164	General PWM 16-Bit Timer 4	0x4016_9400
GPT165	General PWM 16-Bit Timer 5	0x4016_9500
GPT166	General PWM 16-Bit Timer 6	0x4016_9600
GPT167	General PWM 16-Bit Timer 7	0x4016_9700
GPT_OPS	Output Phase Switching Controller	0x4016_9A00
ADC120	12bit A/D Converter 0	0x4017_0000

Table 3.1 外设基地址（2个，共3个）

Name	Description	基址
WDT	看门狗定时器	0x4008_3400
CAC	时钟频率精度测量电路	0x4008_3600
MSTP	模块停止控制A、B、C、D	0x4008_4000
POEG	GPT端口输出使能模块	0x4008_A000
USBFS	USB2.0FS模块	0x4009_0000
SDHI0	SD主机接口0	0x4009_2000
SSIE0	串行声音接口增强(SSIE)	0x4009_D000
IIC0	Inter-Integrated Circuit 0	0x4009_F000
IIC0WU	内部集成电路0唤醒单元	0x4009_F014
IIC1	Inter-Integrated Circuit 1	0x4009_F100
CAN0	CAN0 Module	0x400A_8000
CAN1	CAN1 Module	0x400A_9000
CTSU	电容式触控感应单元	0x400D_0000
PSCU	外围安全控制单元	0x400E_0000
AGT0	低功耗异步通用定时器0	0x400E_8000
AGT1	低功耗异步通用定时器1	0x400E_8100
AGT2	低功耗异步通用定时器2	0x400E_8200
AGT3	低功耗异步通用定时器3	0x400E_8300
AGT4	低功耗异步通用定时器4	0x400E_8400
AGT5	低功耗异步通用定时器5	0x400E_8500
TSN	温度感应器	0x400F_3000
CRC	CRC Calculator	0x4010_8000
DOC	数据运算电路	0x4010_9000
SCI0	串行通讯接口0	0x4011_8000
SCI1	串行通讯接口1	0x4011_8100
SCI2	串行通讯接口2	0x4011_8200
SCI3	串行通讯接口3	0x4011_8300
SCI4	串行通讯接口4	0x4011_8400
SCI9	串行通讯接口9	0x4011_8900
SPI0	串行外设接口0	0x4011_A000
SCE9	安全加密引擎	0x4016_1000
GPT320	通用PWM32位定时器0	0x4016_9000
GPT321	通用PWM32位定时器1	0x4016_9100
GPT322	通用PWM32位定时器2	0x4016_9200
GPT323	通用PWM32位定时器3	0x4016_9300
GPT164	通用PWM16位定时器4	0x4016_9400
GPT165	通用PWM16位定时器5	0x4016_9500
GPT166	通用PWM16位定时器6	0x4016_9600
GPT167	通用PWM16位定时器7	0x4016_9700
GPT_OPS	输出相位切换控制器	0x4016_9A00
ADC120	12bit A/D Converter 0	0x4017_0000

RA生态工作室

Table 3.1 Peripheral base address (3 of 3)

Name	Description	Base address
ADC121	12bit A/D Converter 1	0x4017_0200
DAC12	12-bit D/A converter	0x4017_1000
FLAD	Data Flash	0x407F_C000
FACI	Flash Application Command Interface	0x407F_E000
QSPI	Quad-SPI	0x6400_0000

Note: Name = Peripheral name
Description = Peripheral functionality
Base address = Lowest reserved address or address used by the peripheral

3.2 Access Cycles

This section provides access cycle information for the I/O registers described in this manual.

- Registers are grouped by associated module.
- The number of access cycles indicates the number of cycles based on the specified reference clock.
- In the internal I/O area, reserved addresses that are not allocated to registers must not be accessed, otherwise operations cannot be guaranteed.
- The number of I/O access cycles depends on bus cycles of the internal peripheral bus, divided clock synchronization cycles, and wait cycles of each module. Divided clock synchronization cycles differ depending on the frequency ratio between ICLK and PCLK.
- When the frequency of ICLK is equal to that of PCLK, the number of divided clock synchronization cycles is always constant.
- When the frequency of ICLK is greater than that of PCLK, at least 1 PCLK cycle is added to the number of divided clock synchronization cycles.
- The number of write access cycles indicates the number of cycles obtained by non-bufferable write access.

Note: This applies to the number of cycles when access from the CPU does not conflict with the instruction fetching to the external memory or bus access from other bus masters such as DTC or DMAC.

Table 3.2 Access cycles (1 of 3)

Peripherals	Address		Number of access cycles					
			ICLK = PCLK		ICLK > PCLK*1		Cycle Unit	Related function
	From	To	Read	Write	Read	Write		
RMPU, TZF, SRAM, BUS, DMACn, DMA, DTC, ICU	0x4000_0000	0x4000_6FFF	2	2	2	2	ICLK	Renesas Memory Protection Unit, TrustZone Filter, SRAM Control, BUS Control, Direct memory access controller n, DMAC Module Activation, DTC Control Register, Interrupt Controller
CPSCU, DBG, FCACHE	0x4000_8000	0x4001_CFFF	4	3	4	3	ICLK	CPU System Security Control Unit, Debug Function, Flash Cache
SYSC	0x4001_E000	0x4001_E3FF	5	4	5	4	ICLK	System Control
SYSC	0x4001_E400	0x4001_E5FF	9	8	5 to 8	5 to 8	PCLKB	System Control
PORTn, PFS	0x4008_0000	0x4008_0FFF	5	4	2 to 5	2 to 4	PCLKB	Port n Control Registers, Pmn Pin Function Control Register

Table 3.1 外设基地址(3of3)

Name	Description	基址
ADC121	12bit A/D Converter 1	0x4017_0200
DAC12	12-bit D/A converter	0x4017_1000
FLAD	数据闪存	0x407F_C000
FACI	Flash应用命令接口	0x407F_E000
QSPI	Quad-SPI	0x6400_0000

Note: 名称=外设名称
描述=外围功能
基地址=外设使用的最低保留地址或地址

3.2 访问周期

本节提供本手册中描述的IO寄存器的访问周期信息。

●寄存器按相关模块分组。

●访问周期数是指基于指定参考时钟的周期数。

●在内部IO区，不能访问未分配给寄存器的保留地址，否则无法保证操作。

●IO访问周期数取决于内部外设总线的总线周期、分频时钟同步周期和每个模块的等待周期。分频时钟同步周期取决于ICLK和PCLK之间的频率比。

●当ICLK的频率等于PCLK的频率时，分频的时钟同步周期数始终是恒定的。

●当ICLK频率大于PCLK频率时，分频时钟同步周期数至少增加1个PCLK周期。

●写访问周期数是指非缓冲写访问所获得的周期数。

Note: 这适用于当来自CPU的访问与从外部存储器获取指令或来自其他总线主控器（例如DTC或DMAC）的总线访问不冲突时的周期数。

Table 3.2 访问周期(1of3)

Peripherals	Address		访问周期数					
			ICLK = PCLK		ICLK > PCLK*1		Cycle Unit	相关功能
	From	To	Read	Write	Read	Write		
RMPU, TZF, SRAM, BUS, DMACn, DMA, DTC, ICU	0x4000_0000	0x4000_6FFF	2	2	2	2	ICLK	瑞萨内存保护单元、TrustZone过滤器、SRAM控制，总线控制、直接内存访问控制器n、DMAC模块激活、DTC控制寄存器、中断控制器
CPSCU, DBG, FCACHE	0x4000_8000	0x4001_CFFF	4	3	4	3	ICLK	CPU系统安全控制单元，调试功能，闪存
SYSC	0x4001_E000	0x4001_E3FF	5	4	5	4	ICLK	系统控制
SYSC	0x4001_E400	0x4001_E5FF	9	8	5 to 8	5 to 8	PCLKB	系统控制
PORTn, PFS	0x4008_0000	0x4008_0FFF	5	4	2 to 5	2 to 4	PCLKB	端口n控制寄存器，Pmn引脚功能控制Register

RA生态工作室

Table 3.2 Access cycles (2 of 3)

Peripherals	Address		Number of access cycles					
			ICLK = PCLK		ICLK > PCLK*1		Cycle Unit	Related function
	From	To	Read	Write	Read	Write		
ELC, RTC, IWDT, WDT, CAC	0x4008_2000	0x4008_3FFF	5	4	3 to 5	2 to 4	PCLKB	Event Link Controller, Realtime Clock, Independent Watchdog Timer, Watchdog Timer, Clock Frequency Accuracy Measurement Circuit
MSTP	0x4008_4000	0x4008_4FFF	5	4	2 to 5	2 to 4	PCLKB	Module Stop Control
POEG	0x4008_A000	0x4008_AFFF	5	4	3 to 5	2 to 4	PCLKB	Port Output Enable Module for GPT
USBFS	0x4009_0000	0x4009_3FFF	6	5	3 to 6	3 to 5	PCLKB	USB 2.0 FS Module
USBFS	0x4009_4000	0x4009_4FFF	4	3	1 to 4	1 to 3	PCLKB	USB 2.0 FS Module
SDHI0, SSIE0, IICn, IIC0WU	0x4009_2000	0x4009_FFFF	5	4	2 to 5	2 to 4	PCLKB	SD Host Interface 0, Serial Sound Interface Enhanced, Inter-Integrated Circuit n, Inter-Integrated Circuit 0 Wake-up Unit
CANn	0x400A_8000	0x400A_9FFF	5	4	2 to 5	2 to 4	PCLKB	CANn Module
CTSU	0x400D_0000	0x400D_FFFF	4	3	1 to 4	1 to 3	PCLKB	Capacitive Touch Sensing Unit
PSCU	0x400E_0000	0x400E_0FFF	5	4	2 to 5	2 to 4	PCLKB	Peripheral Security Control Unit
AGTn	0x400E_8000	0x400E_8FFF	7	4	5 to 7	2 to 4	PCLKB	Low Power Asynchronous General purpose Timer n
TSN	0x400F_3000	0x400F_3FFF	5	4	2 to 5	2 to 4	PCLKB	Temperature Sensor
CRC, DOC	0x4010_8000	0x4010_9FFF	5	4	2 to 5	2 to 4	PCLKA	CRC Calculator, Data Operation Circuit
SCIn	0x4011_8000	0x4011_8FFF	5*2	4*2	2 to 5*2	2 to 4*2	PCLKA	Serial Communication Interface n
SPIn	0x4011_A000	0x4011_AFFF	5*3	4*3	2 to 5*3	2 to 4*3	PCLKA	Serial Peripheral Interface n
SCE9	0x4016_1000	0x4016_1FFF	6	4	3 to 6	2 to 4	PCLKA	Secure Cryptographic Engine
GPT32n, GPT16n, GPT_OPS	0x4016_9000	0x4016_9FFF	7	4	4 to 7	2 to 4	PCLKA	General PWM 32-Bit Timer n, General PWM 16-Bit Timer n, Output Phase Switching Controller
ADC12n, DAC12	0x4017_0000	0x4017_2FFF	5	4	2 to 5	2 to 4	PCLKA	12bit A/D Converter n, 12-bit D/A converter
QSPI	0x6400_0000	0x6400_000F	5	14 to *4	2 to 5	14 to *4	PCLKA	Quad-SPI
QSPI	0x6400_0010	0x6400_0013	25 to *4	6 to *4	25 to *4	5 to *4	PCLKA	Quad-SPI
QSPI	0x6400_0014	0x6400_0037	5	14 to *4	2 to 5	14 to *4	PCLKA	Quad-SPI
QSPI	0x6400_0804	0x6400_0807	4	3	1 to 4	1 to 3	PCLKA	Quad-SPI

Table 3.2 访问周期（2个，共3个）

Peripherals	Address		访问周期数					
			ICLK = PCLK		ICLK > PCLK*1		Cycle Unit	相关功能
	From	To	Read	Write	Read	Write		
ELC, RTC, IWDT, WDT, CAC	0x4008_2000	0x4008_3FFF	5	4	3 to 5	2 to 4	PCLKB	事件链接控制器，实时时钟，独立 看门狗定时器，看门狗定时器，时钟频率 Accuracy 测量电路
MSTP	0x4008_4000	0x4008_4FFF	5	4	2 to 5	2 to 4	PCLKB	模块停止控制
POEG	0x4008_A000	0x4008_AFFF	5	4	3 to 5	2 to 4	PCLKB	端口输出使能 GPT模块
USBFS	0x4009_0000	0x4009_3FFF	6	5	3 to 6	3 to 5	PCLKB	USB2.0FS模块
USBFS	0x4009_4000	0x4009_4FFF	4	3	1 to 4	1 to 3	PCLKB	USB2.0FS模块
SDHI0, SSIE0, IICn, IIC0WU	0x4009_2000	0x4009_FFFF	5	4	2 to 5	2 to 4	PCLKB	SD主机接口0，串行声音接口增强型，国米集成电路n内部集成电路0唤醒单元
CANn	0x400A_8000	0x400A_9FFF	5	4	2 to 5	2 to 4	PCLKB	CANn模块
CTSU	0x400D_0000	0x400D_FFFF	4	3	1 to 4	1 to 3	PCLKB	Capacitive Touch 传感单元
PSCU	0x400E_0000	0x400E_0FFF	5	4	2 to 5	2 to 4	PCLKB	外围安全控制单元
AGTn	0x400E_8000	0x400E_8FFF	7	4	5 to 7	2 to 4	PCLKB	低电量 Asynchronous 一般用途 Timer n
TSN	0x400F_3000	0x400F_3FFF	5	4	2 to 5	2 to 4	PCLKB	温度感应器
CRC, DOC	0x4010_8000	0x4010_9FFF	5	4	2 to 5	2 to 4	PCLKA	CRC计算器，数据运算电路
SCIn	0x4011_8000	0x4011_8FFF	5*2	4*2	2 to 5*2	2 to 4*2	PCLKA	串行通信 Interface n
SPIn	0x4011_A000	0x4011_AFFF	5*3	4*3	2 to 5*3	2 to 4*3	PCLKA	串行外设 Interface n
SCE9	0x4016_1000	0x4016_1FFF	6	4	3 to 6	2 to 4	PCLKA	安全密码学 Engine
GPT32n, GPT16n, GPT_OPS	0x4016_9000	0x4016_9FFF	7	4	4 to 7	2 to 4	PCLKA	通用PWM32位定时器n，通用PWM16位定时器n，输出相位开关控制器
ADC12n, DAC12	0x4017_0000	0x4017_2FFF	5	4	2 to 5	2 to 4	PCLKA	12bit A/D Converter n, 12-bit D/A converter
QSPI	0x6400_0000	0x6400_000F	5	14 to *4	2 to 5	14 to *4	PCLKA	Quad-SPI
QSPI	0x6400_0010	0x6400_0013	25 to *4	6 to *4	25 to *4	5 to *4	PCLKA	Quad-SPI
QSPI	0x6400_0014	0x6400_0037	5	14 to *4	2 to 5	14 to *4	PCLKA	Quad-SPI
QSPI	0x6400_0804	0x6400_0807	4	3	1 to 4	1 to 3	PCLKA	Quad-SPI

瑞生态工作室

Table 3.2 Access cycles (3 of 3)

Peripherals	Address		Number of access cycles					
			ICLK = FCLK		ICLK > FCLK*1		Cycle Unit	Related function
	From	To	Read	Write	Read	Write		
FLAD, FACI	0x407F_C000	0x407F_EFFF	3	3	2 to 3	2 to 3	FCLK	Data Flash, Flash Application Command Interface

Note 1. If the number of PCLK or FCLK cycles is non-integer (for example 1.5), the minimum value is without the decimal point, and the maximum value is rounded up to the decimal point. For example, 1.5 to 2. 5 is 1 to 3.
Note 2. When accessing a 16-bit register (FTDRHL, FRDRHL, FCR, FDR, LSR, and CDR), access is 2 cycles more than the value shown in Table 3.2. When accessing an 8-bit register (including FTDRH, FTDRL, FRDRH, and FRDRL), the access cycles are as shown in Table 3.2.
Note 3. When accessing the 32-bit register (SPDR), access is 2 cycles more than the value in Table 3.2. When accessing an 8-bit or 16-bit register (SPDR_HA), the access cycles are as shown in Table 3.2.
Note 4. The access cycles depend on the QSPI bus cycles.

Table 3.2 访问周期（3个，共3个）

Peripherals	Address		访问周期数					
			ICLK = FCLK		ICLK > FCLK*1		Cycle Unit	相关功能
	From	To	Read	Write	Read	Write		
FLAD, FACI	0x407F_C000	0x407F_EFFF	3	3	2 to 3	2 to 3	FCLK	数据闪存、闪存应用命令 Interface

注1.若PCLK或FCLK周期数为非整数（例如1.5），则最小值不带小数点，最大值四舍五入到小数点。例如，1.5到2。5是1到3。

注2.访问16位寄存器（FTDRHL、FRDRHL、FCR、FDR、LSR和CDR）时，访问时间比中所示的值多2个周期
表3.2。访问8位寄存器（包括FTDRH、FTDRL、FRRDH和FRDRL）时，访问周期如下图所示：
Table 3.2.
注3.访问32位寄存器(SPDR)时，访问比表3.2中的值多2个周期。访问8位或16位寄存器（SPDR_HA）时，访问周期如表3.2所示。

注4.访问周期取决于QSPI总线周期。

RA生态工作室

Revision History

Revision 1.00 — August 28, 2020

First edition, issued

Revision 1.10 — January 27, 2021

1. Overview:
- Added note to Figure 1.1 Block diagram.
- Changed pin name in Table 1.15 Pin functions.

2. Electrical Characteristics:
- Added information about supported functions and pins.
- Changed LDO to LDOn in Table 2.7 Operating and standby current.
- added Note 15 to PLL2-LDO operating current in Table 2.7 Operating and standby current.
- Removed ADTRG1 in Figure 2.25 ADC12 trigger input timing.

修订记录

修订版1.00—2020年8月28日

第一版，已发行

1.10版——2021年1月27日

1. Overview:
- 在图1.1框图中添加了注释。
- 更改了表1.15引脚功能中的引脚名称。

2. Electrical Characteristics:
- 添加了有关支持的功能和引脚的信息。
- 将表2.7工作和待机电流中的LDO更改为LDOn。
- 在表2.7工作和待机电流中为PLL2-LDO工作电流添加了注15。
- 删除了图2.25ADC12触发输入时序中的ADTRG1。

RA生态工作室

General Precautions in the Handling of Microprocessing Unit and Microcontroller Unit Products

The following usage notes are applicable to all Microprocessing unit and Microcontroller unit products from Renesas. For detailed usage notes on the products covered by this document, refer to the relevant sections of the document as well as any technical updates that have been issued for the products.

1. Precaution against Electrostatic Discharge (ESD)
   A strong electrical field, when exposed to a CMOS device, can cause destruction of the gate oxide and ultimately degrade the device operation. Steps must be taken to stop the generation of static electricity as much as possible, and quickly dissipate it when it occurs. Environmental control must be adequate. When it is dry, a humidifier should be used. This is recommended to avoid using insulators that can easily build up static electricity. Semiconductor devices must be stored and transported in an anti-static container, static shielding bag or conductive material. All test and measurement tools including work benches and floors must be grounded. The operator must also be grounded using a wrist strap. Semiconductor devices must not be touched with bare hands. Similar precautions must be taken for printed circuit boards with mounted semiconductor devices.
2. Processing at power-on
   The state of the product is undefined at the time when power is supplied. The states of internal circuits in the LSI are indeterminate and the states of register settings and pins are undefined at the time when power is supplied. In a finished product where the reset signal is applied to the external reset pin, the states of pins are not guaranteed from the time when power is supplied until the reset process is completed. In a similar way, the states of pins in a product that is reset by an on-chip power-on reset function are not guaranteed from the time when power is supplied until the power reaches the level at which resetting is specified.
3. Input of signal during power-off state
   Do not input signals or an I/O pull-up power supply while the device is powered off. The current injection that results from input of such a signal or I/O pull-up power supply may cause malfunction and the abnormal current that passes in the device at this time may cause degradation of internal elements. Follow the guideline for input signal during power-off state as described in your product documentation.
4. Handling of unused pins
   Handle unused pins in accordance with the directions given under handling of unused pins in the manual. The input pins of CMOS products are generally in the high-impedance state. In operation with an unused pin in the open-circuit state, extra electromagnetic noise is induced in the vicinity of the LSI, an associated shoot-through current flows internally, and malfunctions occur due to the false recognition of the pin state as an input signal become possible.
5. Clock signals
   After applying a reset, only release the reset line after the operating clock signal becomes stable. When switching the clock signal during program execution, wait until the target clock signal is stabilized. When the clock signal is generated with an external resonator or from an external oscillator during a reset, ensure that the reset line is only released after full stabilization of the clock signal. Additionally, when switching to a clock signal produced with an external resonator or by an external oscillator while program execution is in progress, wait until the target clock signal is stable.
6. Voltage application waveform at input pin
   Waveform distortion due to input noise or a reflected wave may cause malfunction. If the input of the CMOS device stays in the area between V_{IL} (Max.) and V_{IH} (Min.) due to noise, for example, the device may malfunction. Take care to prevent chattering noise from entering the device when the input level is fixed, and also in the transition period when the input level passes through the area between V_{IL} (Max.) and V_{IH} (Min.).
7. Prohibition of access to reserved addresses
   Access to reserved addresses is prohibited. The reserved addresses are provided for possible future expansion of functions. Do not access these addresses as the correct operation of the LSI is not guaranteed.
8. Differences between products
   Before changing from one product to another, for example to a product with a different part number, confirm that the change will not lead to problems. The characteristics of a microprocessing unit or microcontroller unit products in the same group but having a different part number might differ in terms of internal memory capacity, layout pattern, and other factors, which can affect the ranges of electrical characteristics, such as characteristic values, operating margins, immunity to noise, and amount of radiated noise. When changing to a product with a different part number, implement a system-evaluation test for the given product.

处理微处理单元和微控制器的一般注意事项
单位产品

以下使用说明适用于瑞萨的所有微处理单元和微控制器单元产品。有关详细的使用说明本文档所涵盖的产品，请参阅文档的相关部分以及为产品发布的任何技术更新。

1. 防止静电放电(ESD)
   当暴露于CMOS器件时，强电场会导致栅极氧化物的破坏并最终降低器件的运行性能。脚步必须采取措施，尽可能停止静电的产生，并在出现时迅速消散。环境控制必须足够的。干燥时，应使用加湿器。建议避免使用容易产生静电的绝缘体。半导体器件必须在防静电容器、静电屏蔽袋或导电材料中储存和运输。所有测试和包括工作台和地板在内的测量工具必须接地。操作员还必须使用腕带接地。半导体不得赤手触摸设备。对于安装有半导体器件的印刷电路板，必须采取类似的预防措施。
2. 上电处理
   通电时产品的状态是不确定的。LSI内部电路的状态是不确定的，通电时寄存器设置和引脚未定义。在将复位信号施加到外部复位的成品中管脚，从通电到复位过程完成，管脚的状态不能保证。以类似的方式，引脚的状态在通过片内上电复位功能复位的产品中，从供电时间到供电达到指定重置的级别。
3. 断电状态下的信号输入
   请勿在设备断电时输入信号或IO上拉电源。输入此类信号或IO导致的电流注入上拉电源可能会导致故障，此时通过设备的异常电流可能会导致内部退化元素。请按照产品文档中所述的电源关闭状态下的输入信号指南进行操作。
4. 处理未使用的引脚
   按照手册中未使用引脚处理中给出的说明处理未使用的引脚。CMOS产品的输入引脚是一般处于高阻状态。在开路状态下使用未使用的引脚操作时，会在附近感应出额外的电磁噪声LSI，相关的直通电流在内部流动，并且由于将引脚状态错误识别为输入信号而发生故障成为可能。
5. 时钟信号
   应用复位后，只有在工作时钟信号稳定后才释放复位线。在程序中切换时钟信号时执行，等待目标时钟信号稳定。当时钟信号由外部谐振器或外部振荡器产生时在复位期间，确保只有在时钟信号完全稳定后才释放复位线。此外，当切换到时钟信号时在程序执行过程中由外部谐振器或外部振荡器产生，等待目标时钟信号稳定。
6. 输入引脚的电压施加波形
   由于输入噪声或反射波导致的波形失真可能会导致故障。如果CMOS器件的输入保持在VIL之间的区域(Max.)和VIH(Min.)由于噪音，例如，设备可能发生故障。小心，以防止颤动的噪音进入设备时，输入电平是固定的，并且在输入电平通过VIL(Max.)和VIH(Min.)之间的区域时的过渡期间也是如此。
7. 禁止访问保留地址
   禁止访问保留地址。保留地址是为将来可能的功能扩展提供的。不要访问这些不能保证LSI的正确操作。
8. 产品之间的差异
   在从一种产品更改为另一种产品之前，例如更改为具有不同部件号的产品，请确认更改不会导致问题。同一组中的微处理单元或微控制器单元产品的特性，但具有不同的部件号，其特性可能会有所不同内部存储器容量，布局模式和其他因素，这些因素会影响电气特性的范围，例如特性值，工作裕度、抗噪声能力和辐射噪声量。当更改为具有不同部件号的产品时，实施系统–给定产品的评估测试。

RA生态工作室

Notice

1. Descriptions of circuits, software and other related information in this document are provided only to illustrate the operation of semiconductor products and application examples. You are fully responsible for the incorporation or any other use of the circuits, software, and information in the design of your product or system. Renesas Electronics disclaims any and all liability for any losses and damages incurred by you or third parties arising from the use of these circuits, software, or information.
2. Renesas Electronics hereby expressly disclaims any warranties against and liability for infringement or any other claims involving patents, copyrights, or other intellectual property rights of third parties, by or arising from the use of Renesas Electronics products or technical information described in this document, including but not limited to, the product data, drawings, charts, programs, algorithms, and application examples.
3. No license, express, implied or otherwise, is granted hereby under any patents, copyrights or other intellectual property rights of Renesas Electronics or others.
4. You shall be responsible for determining what licenses are required from any third parties, and obtaining such licenses for the lawful import, export, manufacture, sales, utilization, distribution or other disposal of any products incorporating Renesas Electronics products, if required.
5. You shall not alter, modify, copy, or reverse engineer any Renesas Electronics product, whether in whole or in part. Renesas Electronics disclaims any and all liability for any losses or damages incurred by you or third parties arising from such alteration, modification, copying or reverse engineering.
6. Renesas Electronics products are classified according to the following two quality grades: “Standard” and “High Quality”. The intended applications for each Renesas Electronics product depends on the product’s quality grade, as indicated below.
   "Standard": Computers; office equipment; communications equipment; test and measurement equipment; audio and visual equipment; home electronic appliances; machine tools; personal electronic equipment; industrial robots; etc.
   "High Quality": Transportation equipment (automobiles, trains, ships, etc.); traffic control (traffic lights); large-scale communication equipment; key financial terminal systems; safety control equipment; etc.
   Unless expressly designated as a high reliability product or a product for harsh environments in a Renesas Electronics data sheet or other Renesas Electronics document, Renesas Electronics products are not intended or authorized for use in products or systems that may pose a direct threat to human life or bodily injury (artificial life support devices or systems; surgical implantations; etc.), or may cause serious property damage (space system; undersea repeaters; nuclear power control systems; aircraft control systems; key plant systems; military equipment; etc.). Renesas Electronics disclaims any and all liability for any damages or losses incurred by you or any third parties arising from the use of any Renesas Electronics product that is inconsistent with any Renesas Electronics data sheet, user’s manual or other Renesas Electronics document.
7. No semiconductor product is absolutely secure. Notwithstanding any security measures or features that may be implemented in Renesas Electronics hardware or software products, Renesas Electronics shall have absolutely no liability arising out of any vulnerability or security breach, including but not limited to any unauthorized access to or use of a Renesas Electronics product or a system that uses a Renesas Electronics product. RENESAS ELECTRONICS DOES NOT WARRANT OR GUARANTEE THAT RENESAS ELECTRONICS PRODUCTS, OR ANY SYSTEMS CREATED USING RENESAS ELECTRONICS PRODUCTS WILL BE INVULNERABLE OR FREE FROM CORRUPTION, ATTACK, VIRUSES, INTERFERENCE, HACKING, DATA LOSS OR THEFT, OR OTHER SECURITY INTRUSION (“Vulnerability Issues”). RENESAS ELECTRONICS DISCLAIMS ANY AND ALL RESPONSIBILITY OR LIABILITY ARISING FROM OR RELATED TO ANY VULNERABILITY ISSUES. FURTHERMORE, TO THE EXTENT PERMITTED BY APPLICABLE LAW, RENESAS ELECTRONICS DISCLAIMS ANY AND ALL WARRANTIES, EXPRESS OR IMPLIED, WITH RESPECT TO THIS DOCUMENT AND ANY RELATED OR ACCOMPANYING SOFTWARE OR HARDWARE, INCLUDING BUT NOT LIMITED TO THE IMPLIED WARRANTIES OF MERCHANTABILITY, OR FITNESS FOR A PARTICULAR PURPOSE.
8. When using Renesas Electronics products, refer to the latest product information (data sheets, user’s manuals, application notes, “General Notes for Handling and Using Semiconductor Devices” in the reliability handbook, etc.), and ensure that usage conditions are within the ranges specified by Renesas Electronics with respect to maximum ratings, operating power supply voltage range, heat dissipation characteristics, installation, etc. Renesas Electronics disclaims any and all liability for any malfunctions, failure or accident arising out of the use of Renesas Electronics products outside of such specified ranges.
9. Although Renesas Electronics endeavors to improve the quality and reliability of Renesas Electronics products, semiconductor products have specific characteristics, such as the occurrence of failure at a certain rate and malfunctions under certain use conditions. Unless designated as a high reliability product or a product for harsh environments in a Renesas Electronics data sheet or other Renesas Electronics document, Renesas Electronics products are not subject to radiation resistance design. You are responsible for implementing safety measures to guard against the possibility of bodily injury, injury or damage caused by fire, and/or danger to the public in the event of a failure or malfunction of Renesas Electronics products, such as safety design for hardware and software, including but not limited to redundancy, fire control and malfunction prevention, appropriate treatment for aging degradation or any other appropriate measures. Because the evaluation of microcomputer software alone is very difficult and impractical, you are responsible for evaluating the safety of the final products or systems manufactured by you.
10. Please contact a Renesas Electronics sales office for details as to environmental matters such as the environmental compatibility of each Renesas Electronics product. You are responsible for carefully and sufficiently investigating applicable laws and regulations that regulate the inclusion or use of controlled substances, including without limitation, the EU RoHS Directive, and using Renesas Electronics products in compliance with all these applicable laws and regulations. Renesas Electronics disclaims any and all liability for damages or losses occurring as a result of your noncompliance with applicable laws and regulations.
11. Renesas Electronics products and technologies shall not be used for or incorporated into any products or systems whose manufacture, use, or sale is prohibited under any applicable domestic or foreign laws or regulations. You shall comply with any applicable export control laws and regulations promulgated and administered by the governments of any countries asserting jurisdiction over the parties or transactions.
12. It is the responsibility of the buyer or distributor of Renesas Electronics products, or any other party who distributes, disposes of, or otherwise sells or transfers the product to a third party, to notify such third party in advance of the contents and conditions set forth in this document.
13. This document shall not be reprinted, reproduced or duplicated in any form, in whole or in part, without prior written consent of Renesas Electronics.
14. Please contact a Renesas Electronics sales office if you have any questions regarding the information contained in this document or Renesas Electronics products.

(Note1) “Renesas Electronics” as used in this document means Renesas Electronics Corporation and also includes its directly or indirectly controlled subsidiaries.
(Note2) “Renesas Electronics product(s)” means any product developed or manufactured by or for Renesas Electronics.

(Rev.5.0-1 October 2020)

Corporate Headquarters

TOYOSU FORESIA, 3-2-24 Toyosu,
Koto-ku, Tokyo 135-0061, Japan

www.renesas.com

Trademarks

Renesas and the Renesas logo are trademarks of Renesas Electronics Corporation. All trademarks and registered trademarks are the property of their respective owners.

Contact information

For further information on a product, technology, the most up-to-date version of a document, or your nearest sales office, please visit:
www.renesas.com/contact/.

© 2021 Renesas Electronics Corporation. All rights reserved.

Notice

1. 本文档中对电路、软件和其他相关信息的描述仅用于说明半导体产品的操作和应用示例。您对在您的产品或系统设计中使用或以任何其他方式使用电路、软件和信息负全部责任。对于您或第三方因使用这些电路、软件或信息而遭受的任何损失和损害，瑞萨电子不承担任何责任。

2. 瑞萨电子特此明确声明，对于因使用本文档中描述的瑞萨电子产品或技术信息（包括但不限于产品数据、图纸、图表、程序、算法和应用示例。

3. 瑞萨电子或其他方的任何专利、版权或其他知识产权在此未授予任何明示、暗示或其他许可。

4. 您应负责确定需要从任何第三方获得哪些许可证，并在需要时为合法进口、出口、制造、销售、使用、分销或以其他方式处置任何包含瑞萨电子产品的产品获取此类许可证。

5. 您不得全部或部分更改、修改、复制或反向工程任何瑞萨电子产品。对于您或第三方因此类更改、修改、复制或逆向工程而遭受的任何损失或损害，瑞萨电子不承担任何责任。

6. 瑞萨电子产品根据以下两个质量等级进行分类：“标准”和“高质量”。每个瑞萨电子产品的预期应用取决于产品的质量等级，如下所示。

   “标准”：计算机；办公用品;通讯设备；测试和测量设备；视听设备；家用电器；机械工具;个人电子设备；工业机器人；等“高品质”：运输设备（汽车、火车、轮船等）；交通管制（红绿灯）；大型通讯设备；关键金融终端系统；安全控制设备；除非在瑞萨电子数据表或其他瑞萨电子文档中明确指定为高可靠性产品或适用于恶劣环境的产品，否则瑞萨电子产品不得用于或授权用于可能对人类构成直接威胁的产品或系统生命或身体伤害（人工生命支持设备或系统；外科植入物等），或可能造成严重财产损失（空间系统；海底中继器；核电控制系统；飞机控制系统；关键工厂系统；军事装备等）。）。对于您或任何第三方因使用与任何瑞萨电子数据表、用户手册或其他瑞萨电子文档不一致的任何瑞萨电子产品而导致的任何损害或损失，瑞萨电子不承担任何责任。

7. 没有半导体产品是绝对安全的。尽管瑞萨电子硬件或软件产品中可能实施任何安全措施或功能，但瑞萨电子绝对不承担因任何漏洞或安全漏洞引起的任何责任，包括但不限于任何未经授权访问或使用瑞萨电子产品或使用瑞萨电子产品的系统。瑞萨电子不保证或保证瑞萨电子产品或使用创建的任何系统

   瑞萨电子产品将无懈可击或不受腐败、攻击、病毒、干扰、
   黑客攻击、数据丢失或盗窃或其他安全入侵（“漏洞问题”）。瑞萨电子不承担任何和
   由任何漏洞问题引起或与之相关的所有责任或义务。此外，在某种程度上
   在适用法律允许的情况下，瑞萨电子不提供任何明示或暗示的保证，包括
   关于本文档和任何相关或随附的软件或硬件，包括但不限于
   对适销性或特定用途适用性的默示保证。

8. 使用瑞萨电子产品时，请参阅最新的产品信息（数据表、用户手册、应用说明、“通用说明
   处理和使用半导体器件”在可靠性手册等），并确保使用条件在规定的范围内
   瑞萨电子关于最大额定值、工作电源电压范围、散热特性、安装等方面的信息。瑞萨电子不对因在上述规定范围之外使用瑞萨电子产品而引起的任何故障、故障或事故承担任何责任.

9.尽管瑞萨电子努力提高瑞萨电子产品的质量和可靠性，但半导体产品具有特定的特性，例如在一定的使用条件下会出现一定的故障率和故障。除非在瑞萨电子数据表或其他瑞萨电子文档中指定为高可靠性产品或适用于恶劣环境的产品，否则瑞萨电子产品不受抗辐射设计的约束。您有责任实施安全措施，以防止在瑞萨电子产品出现故障或故障时可能造成人身伤害、火灾造成的伤害或损害以及/或对公众造成危险，例如硬件和软件的安全设计，包括但不限于冗余、火灾控制和故障预防、老化退化的适当处理或任何其他适当的措施。因为单单评估微机软件是非常困难和不切实际的，您有责任评估您制造的最终产品或系统的安全性。10.请联系瑞萨电子销售办事处了解有关环境问题的详细信息，例如每个瑞萨电子产品的环境兼容性。您有责任仔细、充分地调查适用于管制物质的包含或使用的法律和法规，包括但不限于欧盟RoHS指令，并按照所有这些适用的法律和法规使用瑞萨电子产品。瑞萨电子对因您不遵守适用法律和法规而造成的损害或损失不承担任何责任。11.瑞萨电子的产品和技术不得用于或整合到任何适用的国内或国外法律或法规禁止制造、使用或销售的产品或系统中。您应遵守对各方或交易主张管辖权的任何国家/地区的政府颁布和管理的任何适用的出口管制法律和法规。12.瑞萨电子产品的购买者或分销商，或将产品分销、处置或以其他方式出售或转让给第三方的任何其他方，有责任提前通知该第三方有关内容和条件本文件中规定。13.未经瑞萨电子事先书面同意，不得以任何形式全部或部分翻印、复制或复制本文档。14.如果您对本文档中包含的信息或瑞萨电子产品有任何疑问，请联系瑞萨电子销售办事处。

(Note1) 本文档中使用的“瑞萨电子”是指瑞萨电子公司，还包括其直接或间接控制的子公司。

(Note2) “瑞萨电子产品”是指由瑞萨电子开发或制造或为瑞萨电子开发或制造的任何产品。

(Rev.5.0-1 October 2020)

公司总部

TOYOSU FORESIA, 3-2-24 Toyosu,
日本东京都江东区135−0061

www.renesas.com

Trademarks

瑞萨和瑞萨标识是瑞萨电子公司的商标。所有商标和注册商标均为其各自所有者的财产。

联系信息

有关产品、技术、文档的最新版本或离您最近的销售办事处的更多信息，请访问：www.renesas.com联系方式。

©2021瑞萨电子公司。版权所有。